40 YEARS
1978 - 2018

INNOVATING SAFETY

MORO S.N.C. dal 1984
INDUSTRIAL FORNITURE
Via Postumia,83 – 31050 Ponzano Veneto (TV)
Tel. 0422 961811 r.a. – Fax. 0422 961830/26
Altri punti vendita:
Treviso – Via dei Da Prata, 34 (lat. V.le della Repubblica)
Tel. 0422 42881 r.a. – Fax. 0422 428840
Conegliano – Via dell'Industria, 24
Tel. 0438 418235 – 0438 370747 – Fax 0438 428860
www.morotreviso.com - info@morotreviso.com

Cilindri molla ad azoto
Nitrogen gas cylinders
Stickstoffgasdruckfedern
Cylindres-ressort à l'azote
Cilindros resorte de nitrógeno
Cilindros com mola ao azoto

SPECIAL SPRINGS

WHAT'S NEW?

View updates online at:
www.specialsprings.com

SPECIAL SPRINGS

Changes and additions to previous catalogs

Product reference	Change description	Page	
Selection Tab	Upgrade section	28-29	2020
M 50 TBI / ...TBM1 / ...TBM2 / ...TEM	New model	41-42-43-44	2020
M 90 B / M 200 B	New model	46-50	2020
MS 90 B / MS 200 B	New model	54-55	2020
RV 170 C - RV 320 C	New model	58-59	2020
RV 1500 B / RS 1500 B / RF 1500 B	New model	65-81-91	2020
RS 170 C - RS 320 C	New model	74-75	2020
H 18500 - 150 C	New stroke	144	2020
HT series	New series	146	2020
ML rev. D	New model	164	2020
MP 150 - 10	New stroke	182	2020
MP 300 - 10	New stroke	183	2020
Installation guideline	New section	203	2020
FBH / FSF / FBF / FBFA	New fixing	228-237-227	2020
R38A	New model	239	2020
39DI5/8-11A	New fixing	240	2020
Easy manifold	Upgrade section	241	2020
Easy manifold ML rev. D	New model	246	2020
Easy manifold Mini cylinders	New model	247	2020
Secondary Wiper	New model	260-261	2020
59MTM	New accessory	274	2020
Minimess Heavy Duty Stainless steel	New connection	276-277	2020
36M21A	New connection	280	2020
Micro 32° Heavy Duty Stainless steel	New connection	281	2020
CP19A	New model	292	2020
CP20A / CP21A	New model	297	2020
CP17A	New model	303	2020
CP23A	New model	304	2020
39PA050B / 39PA070B / 39PA094B	New accessory	315	2020
58UT029A	New accessory	318	2020
39SP01A	New accessory	319	2020
39TS360	New accessory	319	2020
58UT037A	New accessory	319	2020
47TB10 / 47TB11 / 47TB12 / 47TB13 / 47TB14	New accessory	322	2020
39RHP...	New accessory	323	2020
Booster 39NCU... / AirBooster 39NCU...	Upgrade section	324-325	2020
39KNCU...	New accessory	326	2020
Service Station 58UT0...	New accessory	327	2020
Dybo 4.0	New model	330-331	2020
EYE Pressure Sensor	New model	332	2020
TMR...V1/V2/V3	New connection	274	2018
Selection Tab	Upgrade section	28-29	2016 rev. 1
NG 16 x 1,5 / NG 24 x 1,5	New force color code	35-36	2016 rev. 1
M 200 - 016 - A	New stroke	50	2016 rev. 1
SC 500 - 200 - D	New stroke	125	2016 rev. 1
SC 750 / SC 1500 / SC 3000	New stroke	126-127-128	2016 rev. 1
SC 5000 / SC 7500	New stroke	129-130	2016 rev. 1
H 1500	New model	139	2016 rev. 1
H 2400 - 275 - D	New stroke	140	2016 rev. 1
MP series / MQ series	New series	180-188	2016 rev. 1
KE 400 - 006 - A	New stroke	194	2016 rev. 1
KE 1800 / KE 3000 / KE 4700	New stroke	197-198-199	2016 rev. 1
KE 7500 / KE 12000 / KE 18500	New stroke	200-201-202	2016 rev. 1
FB 63 / FBB 150 A / FBC	New fixing	221-223-224	2016 rev. 1
FBD / FBE / FBF	New fixing	225-226-227	2016 rev. 1
FS3 / FCD / FCQD 63 / FSE	New fixing	232-233-235-238	2016 rev. 1
R 50 A / R 75 A / R 95 A	New fixing	239	2016 rev. 1
Secondary Wiper	New accessory	260-261	2016 rev. 1
39PR06A	New accessory	267	2016 rev. 1
36M10B / 39M11B	New model	280	2016 rev. 1
36HY400.. / 36P9/160...	New connection	282-283	2016 rev. 1
39MCPC / 39CP14A	New model	292-299	2016 rev. 1
39CP15A / 39CP16A	New model	301-302	2016 rev. 1
39BD0601A / 39BD0801A	New accessory	306-307	2016 rev. 1
39BD1001A / 39BD1201A	New accessory	308-309	2016 rev. 1
39DDS01A	New accessory	318	2016 rev. 1
58UT025A / 47TB09	New accessory	320-322	2016 rev. 1
FT250 / FT 2000	New accessory	328	2016 rev. 1
NITRO STRIP	New model	334	2016 rev. 1
E Easy manifold	Upgrade section	241	2016

cat. No. 9800C04600019 (printed edition)

cat. No. 9800C04600017/18 (printed edition)

cat. No. 9800C04600116 (printed edition)

cat. No. 9800C04600016 (printed edition)

CAD ENAS

PED 2014/68/EU

CE

SYSTEM CERTIFICATION ISO 9001 SGS

INNOVATING PRODUCTS

EYE PRESSURE SENSOR

Digital system for quick control of the pressure of self-contained gas cylinders, battery-powered

p. 332

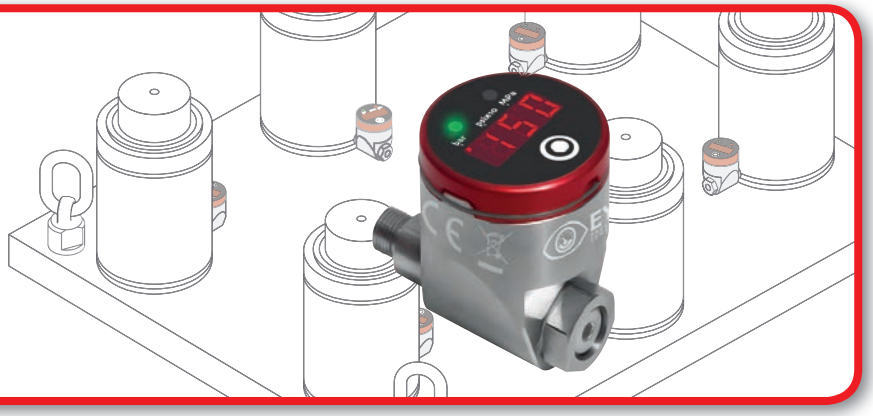

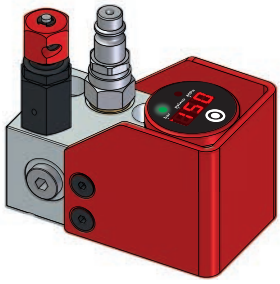

CP23A

control panel with EYE pressure sensor

p. 304

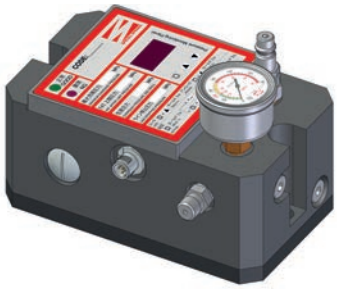

CP17A

control panel TOYOTA STANDARD

p. 303

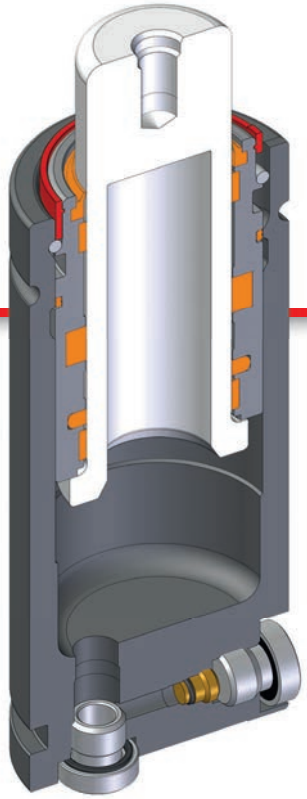

HT SERIES

For high temperature, ISO standard high force

100°C

120°C

p. 146

DYB04.0

DYNAMIC BOOSTER

Equipment for checking the operating parameters of nitrogen cylinders systems installed in stamping dies

p. 330

INDEX

SAFETY
lifeplus concept — p. 6

User information — p. 14

N_2 BENEFITS — p. 24

How to read the catalog — p. 26

Selection TAB — p. 28

NE - NG
VDI - BMW - FCA - Ford - GM
VW
Gas ejectors — p. 30

M
VDI - BMW - FCA - Ford - MB
PSA - VW
Mini cylinders — p. 38

MS SKUDO
Mini cylinders — p. 52

RV
ISO - VDI - BMW - FCA - Ford
VW - Mazda - MB - Nissan
PSA
Min. height, max. force — p. 56

RS SKUDO
Min. height, max. force — p. 72

RF G1/8 charging port
FCA
Min. height, max. force — p. 86

RG G1/8 charging port
Min. height, max. force — p. 94

RT G1/8 charging port
Mazda - Nissan - PSA - Toyota
Min. height, max. force — p. 102

S
MB - Reanult - Suzuki
ISO forces, low profile — p. 114

SC - SCF
ISO - VDI - BMW - FCA - Ford
Mazda - MB - Nissan - VW - PSA
Reanult - Suzuki
ISO 11901 Standard — p. 120

INDEX

H - HF
ISO - VDI - BMW - FCA - VW

ISO, high force p. 132

HT
For high temperature,
ISO standard, high force p. 146

LS
Zero force on contact p. 154

ML
Max. force, rod seal p. 164

MP
Max. force, rod seal p. 180

MQ
Max. force, rod seal p. 188

KE SKUDO
Max. force, piston seal p. 192

Installation guideline
Flange mounts p. 203

easy MANIFOLD
Easy manifold systems p. 241

MANIFOLD
Standard manifold systems p. 252

SW
Secondary rod wiper p. 260

Hosed system p. 262

Accesories p. 314

DYBO 4.0 - EYE
CONTROL DELAY SYSTEM
NITRO STRIP
NITRO PUNCH p. 330

PROTECTION

SW

Raschiatore secondario
Secondary rod wiper
Zweitabstreifer
Racleur de tige secondaire
Rascador de vástago secundario
Anillo raspador secundário

More info: p. 260

SKUDO

Protezione Attiva da Contaminanti
Active Protection from Contaminants
Aktiver Schutz vor Verunreinigungen
Protection Active contre les Contaminants
Protección Activa contra Contaminantes
Capa Protetora Contra Resíduos

Standard on: KE - RS - MS

Upon request for other models

Benefits

IT

- Eccellente protezione da contaminanti liquidi e solidi.
- Poliuretano ad alte prestazioni per massima resistenza chimica ai lubrificanti.
- Aumentata durata di vita di guide e tenute dinamiche.
- Minima perdita di corsa nominale.
- Facile inserimento.
- Nessuna limitazione al libero posizionamento del cilindro.

DE

- Ausgezeichneter Schutz gegen feste und flüssige Verunreinigungen.
- Maximale chemische Beständigkeit gegen Schmierstoffe durch das Hochleistungs-Polyurethan.
- Längere Lebensdauer für Führungselemente und dynamische Dichtungen.
- Minimaler Verlust des Nennhubes.
-Einfaches Einsetzen.
- Keine Einschränkungen für die Positionierung der Gasdruckfeder.

ES

- Protección óptima contra los contaminantes líquidos y sólidos.
- Máxima resistencia química a lubricantes gracias al poliuretano de alto rendimiento.
- Mayor vida útil para elementos de guía y juntas dinámicas.
- Pérdida mínima de carrera nominal.
- Fácil de colocar.
- Ninguna limitación para el posicionamiento del cilindro.

EN

- Excellent protection from liquid and solid contaminants.
- Maximum chemical resistance to lubricants thanks to high-performance polyurethane.
- Longer lifetime for guiding elements and dynamic seals.
- Minimal loss of nominal stroke.
- Easy to insert.
- No restrictions when positioning the cylinder.

FR

- Excellente protection contre contaminants liquides et solides.
- Résistance chimique maximale aux lubrifiants grâce au polyuréthane de haute performance.
- Plus longue durée de vie pour les élément de guidage et les joints dynamiques.
- Perte minimale de la course nominale.
- Facile à insérer.
- Pas de limitations dans le positionnement du ressort-gaz.

PT

- Excelente protecção contra contaminantes líquidos e sólidos.
- Máxima resistência química aos lubrificantes graças ao poliuretano de alto desempenho.
- Tempo de vida mais longo para os elementos de guiamento e vedações dinâmicas.
- Perda mínima de curso nominal.
- Fácil de inserir.
- Não há restrições ao posicionar o cilindro.

Benefits

IT

- Elimina qualsiasi danno da contaminanti ai componenti di guida e tenuta.
- Aumenta significativamente la vita del cilindro in presenza di contaminanti liquidi e solidi.
- Non aumenta l'altezza del cilindro.
- È una protezione non soggetta ad usura alcuna.

DE

- Schützt vor Verunreinigungen, die Schäden an den Führungs- und Dichtungselementen hervorrufen.
- Steigert erheblich die Lebenszeit der Gasdruckfeder bei erschwerten Arbeitsbedingungen.
- Verändert die Gesamthöhe der Gasdruckfeder nicht.
- Ist ein Schutz, der nicht verschleißt.

ES

- Elimina daños de contaminantes a los componentes que garantizan la estanqueidad y guiado.
- Aumenta significativamente la vida del cilindro en presencia de contaminantes líquidos y sólidos.
- No aumenta la altura del cilindro.
- Es una protección que no sufre desgaste.

EN

- Eliminates damages to guiding and sealing components caused by contaminants.
- Significantly increases the life of cylinders used in severe working environments.
- Does not alter the height of the cylinder.
- Does not wear out.

FR

- Élimine tout endommagement du joint et des éléments de guidage du fait de contaminants.
- Augmente de manière signifi cative la vie du ressort en présence de contaminants liquides et solides.
- Ne change pas la hauteur du ressort à gaz.
- Est une protection qui n'est pas soumise à aucune usure.

PT

- Elimina danos causados por residuos nos aneis de vedação e guiamento.
- Aumenta significativamente a vida dos cilindros usados em ambientes de trabalho com residuos.
- Não altera a altura do cilindro.
- É uma proteção que não desgasta.

VDI 3003

OSAS

Sicurezza Attiva Oltre Corsa
Over Stroke Active Safety
Aktive Überhubsicherung
Sécurité Active pour Surcourse
Seguridad Activa de Fin de Carrera
Segurança para Sobre Curso

VDI 3003

USAS

Sicurezza Attiva Ritorno Incontrollato
Uncontrolled Speed Active Safety
Aktiver Schutz bei unkontrolliertem Rückhub
Sécurité Active pour Retour Incontrôlé
Seguridad Activa de Retorno Incontrolado
Segurança para Retorno Descontrolado

VDI 3003

OPAS

Sicurezza Attiva Oltre Pressione
Over Pressure Active Safety
Aktive Überdruck-Sicherheitsvorrichtung
Sécurité Active Surpression
Seguridad Activa por Sobrepresión
Segurança Sobre Pressão

How it works

IT
- Scarica in modo controllato e completo la pressione interna del cilindro quando ha subito un oltre corsa.

EN
- Exhausts pressure in a controlled and complete manner, when the cylinder has been overstroked.

DE
- Ermöglicht das kontrollierte und komplette Entladen des Innendrucks der Gasdruckfeder bei Überhub.

FR
- Décharge la pression du ressort en mode contrôlé et complet dans le cas d'une sourcourse.

ES
- Descarga la presión de manera controlada y completa en caso de que el cilindro sobrepase su carrera máxima.

PT
- Esvazia a pressão do cilindro de forma controlada e completa quando ele sofre sobre-curso.

IT
- Scarica in modo controllato e completo la pressione del cilindro quando soggetto a ritorni incontrollati.

EN
- Exhausts pressure in a controlled and complete manner when the cylinder has been stressed by uncontrolled returns.

DE
- ermöglicht das kontrollierte und komplette Entladen des Innendrucks der Gasdruckfeder bei unkontrolliertem Rückhub.

FR
- Décharge la pression du ressort en mode contrôlé et complet dans de cas des retours non contrôlés.

ES
- Descarga la presión de manera controlada y completa en caso de que el cilindro sufra un retorno incontrolado.

PT
- Quando o cilindro sofrer retornos descontrolados, o mesmo se esvazia de uma maneira controlada e completa.

IT
- Scarica in modo controllato e completo la pressione del cilindro quando viene superato il valore massimo consentito.

EN
- Exhausts the pressure in a controlled and complete manner when it exceeds the maximum allowed value.

DE
- kontrollierte und vollständige Entladung des Innendrucks des Zylinders bei Überschreiten des maximal zulässigen Werts.

FR
- Décharge la pression du ressort en mode contrôlé et complet lorsque la valeur maximale admissible est dépassée.

ES
- Descarga la presión de manera controlada y completa cuando se supera el valor máximo permitido.

PT
- Esvazia a pressão do cilindro de forma controlada e completa quando ele excede o valor máximo permitido.

Benefits

IT
- Riduce il rischio di danni e pericoli dovuti alla proiezione di parti in pressione.
- Si attiva automaticamente senza intervento dell'operatore.
- Non aumenta il prezzo del cilindro.

EN
- Reduces the risk of tool damage or injury due to ejection of parts under pressure.
- Self activates automatically regardless of users' intervention.
- Does not increase the price of cylinders.

DE
- Reduziert das Risiko von Schäden und Gefahren durch wegschleudernde, unter Druck stehende Teile.
- Aktiviert sich automatisch ohne Zutun des Nutzers.
- Erhöht die Kosten der Gasdruckfeder nicht.

FR
- Réduit le risque d'endommagement de l'outil ou le risque de blessure en cas d'éjection de pièces ou composants mis sous pression.
- S'auto-active sans intervention de l'opérateur.
- N'augmente pas le prix du ressort.

ES
- Reduce el riesgo de daños y peligros consecuencia de la proyección de partes bajo presión.
- Se activa automáticamente sin intervención del usuario.
- No aumenta el precio del cilindro.

PT
- Reduz o risco de danos para a ferramenta e ferimentos para o operador por estilhaços.
- Ativa-se automaticamente independentemente de intervenção dos usuários.
- Não aumenta o preço dos cilindros.

SAFETY

Over **S**troke **A**ctive **S**afety

VDI 3003

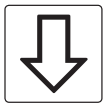

+

Over **S**troke **M**arker

Standard on: RV - RF - RS RG - RT - S SC - H - HF HT - LS

IT OSAS è la combinazione di un prolungamento verso l'esterno della boccola con delle discontinuità sulla parete di contatto della guarnizione boccola-corpo. OSAS si attiva senza deformazione del corpo.

EN OSAS is the combination of an outward extension of the bush with discontinuity groove on the body-bush sealing wall. OSAS self activates without deforming the body of the cylinder.

DE OSAS ist eine Kombination aus der Verlängerung der Buchse nach oben und der Auslaufrille an der Kontaktfläche der Dichtung Körper-Buchse. OSAS aktiviert sich ohne Deformation des Körpers.

FR OSAS est la combinaison d'un prolongement vers l'extérieur de la douille avec gorges discontinues sur la paroi de contact du joint douille-corps. OSAS s'auto-active sans déformer le corps du ressort.

ES OSAS es la combinación de una extensión del casquillo con ranuras discontínuas en la pared de contacto cuerpo-casquillo. OSAS se activa sin deformaciones del cuerpo.

PT OSAS é composto de dois pontos: uma extensão da bucha localizada para fora do corpo, e canais usinados na parte interna do corpo do cilindro onde acontece a vedação. O sistema OSAS é ativado sem deformar o corpo do cilindro.

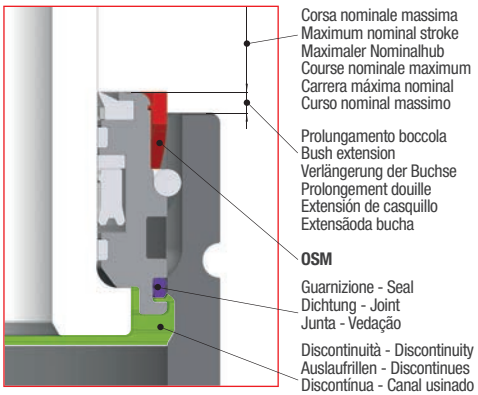

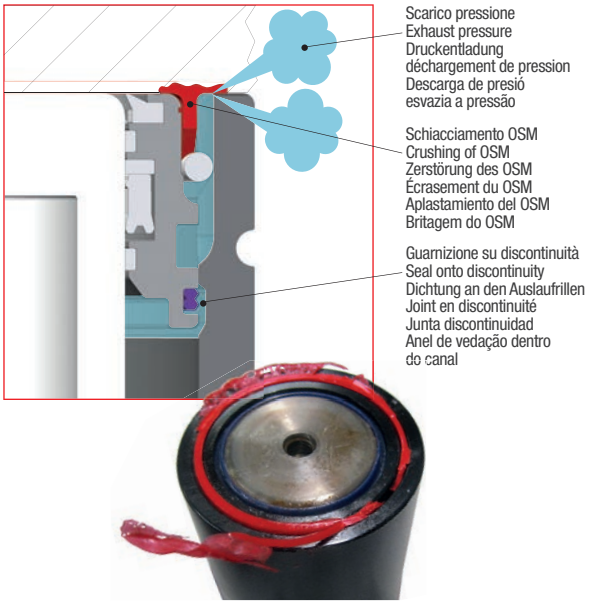

IT Il Marcatore Oltre Corsa OSM:
- permette di vedere immediatamente che il cilindro è stato utilizzato oltre la corsa nominale massima.
- conferma che la sicurezza oltre corsa OSAS è stata attivata.
- permette di intervenire tempestivamente sullo stampo eliminando la causa di oltre corsa.
- non limita il libero posizionamento del cilindro.
- aumenta la sicurezza di utilizzo dei cilindri ad azoto Special Springs.

EN The Over Stroke Marker OSM:
- enables you to see immediately that the cylinder has been used over its maximum nominal stroke.
- confirms that the Over Stroke Safety Feature OSAS has been activated.
- allows you to act promptly on the die to remove the cause of the over stroke.
- doesn't restrict the free positioning of the cylinder.
- improves user safety for Special Springs' nitrogen cylinders.

DE Der Überhubmarker OSM:
- ermöglicht es sofort zu sehen, dass die Gasdruckfeder über den maximalen Nennhub verwendet wurde.
- bestätigt, dass die OSAS Überhubsicherung aktiviert wurde.
- ermöglicht Ihnen, direkt die Ursache des Überhubes im Werkzeug zu beseitigen.
- schränkt die freie Positionierung der Gasdruckfeder nicht ein.
- verbessert die Anwendersicherheit für die Gasdruckfedern von Special Springs

FR Le Marqueur Surcourse OSM:
- vous permet de voir immédiatement que le ressort à gaz a été utilisé au-delà de la course nominale maximale.
- vous confirme que le dispositif de sécurité contre les surcourses OSAS a été activé.
- vous permet d'agir rapidement sur le moule afin d'éliminer la cause de la surcouse.
- ne limite pas un positionnement libre du ressort à gaz.
- améliore la sécurité des utilisateurs des ressorts à gaz Special Springs.

ES El Marcador de Sobrecarrera OSM:
- permite ver inmediatamente que el cilindro ha sido utilizado por encima de la carrera nominal máxima.
- confirma que el dispositivo de seguridad contra sobrecarreras OSAS ha sido activado.
- permite actuar con rapidez en el molde para eliminar la causa de la sobrecarrera.
- no limita el posicionamiento libre del cilindro.
- aumenta la seguridad del usuario de los cilindro de nitrógeno Special Springs.

PT O Marcador do Sobre Curso OSM:
- permite ver imediatamente que o cilindro tem sido utilizado mais do curso nominal máximo.
- confirma que o dispositivo de segurança contra sobre curso OSAS foi activado.
- permite agir rapidamente no troquel para remover a causa do sobre curso.
- não limita o posicionamento livre do cilindro.
- aumenta a segurança do utilizador dos cilindros Special Springs.

Over
Stroke
Active
Safety

VDI 3003

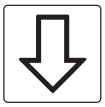

Standard on: ML - MP - MQ

IT OSAS è la combinazione di una zona deformabile del corpo con delle discontinuità sulla parete di contatto della guarnizione fondello-corpo. OSAS si attiva senza pericolo strutturale per il cilindro, aumentando ulteriormente la sicurezza per l'utilizzatore.

EN OSAS is the combination of a deformable body skirt with discontinuity groove on the body-bottom plate sealing wall. OSAS self activates without causing structural damages to the cylinder, further improving safety for users.

DE OSAS ist die Kombination einer deformierbaren Zone des Körpers mit Auslaufrillen an der Kontaktwand der Dichtung Körper-Boden. OSAS aktiviert sich ohne Strukturschäden am Zylinder, wodurch die Sicherheit für den Anwender verbessert wird.

FR OSAS est la combinaison d'une zone déformable du corps avec des gorges discontinues sur la paroi de contact du joint corps-plaque inférieure. OSAS s'auto-active sans provoquer de détériorations structurelles du vérin, améliorant ainsi la sécurité des opérateurs.

ES OSAS es la combinación de una zona deformable del cuerpo con ranuras discontínuas en la pared de contacto cuerpo-placa inferior. OSAS se activa sin peligro estructural para el cilindro, aumentando de manera importante la seguridad para el usuario.

PT OSAS é a combinação de uma área do corpo deformável com ranhura na parede de vedação inferior corpo-placa. OSAS ativa sem causar danos estruturais ao cilindro, melhorando ainda mais a segurança para os usuários.

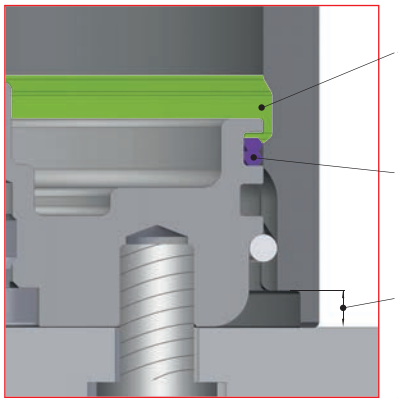

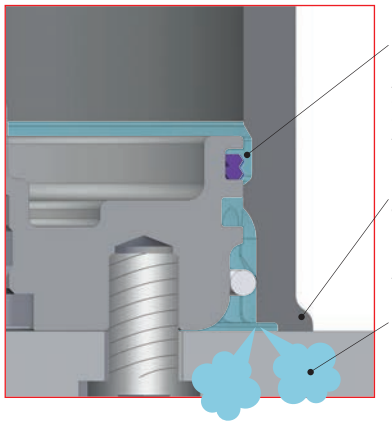

Standard on: KE

IT OSAS è realizzata con delle discontinuità sulla parete di contatto della guarnizione pistone.OSAS si attiva senza deformazione del corpo, aumentando ulteriormente la sicurezza per l'utilizzatore.

EN OSAS are discontinuity grooves on the body-piston sealing wall.OSAS self activates without deforming the body of the cylinder, further improving safety for users.

DE OSAS besteht aus Auslaufrillen an den Kontaktflächen der Kolbendichtung. OSAS aktiviert sich ohne eine Verformung des Körpers, wodurch die Sicherheit für den Anwender verbessert wird.

FR OSAS sont des gorges discontinues sur la paroi de contact du joint corps-piston. OSAS s'auto-active sans provoquer de déformation du vérin, améliorant ainsi la sécurité des opérateurs.

ES OSAS consiste en ranuras discontínuas en la pared de contacto cuerpo-pistón. OSAS se activa sin deformaciones del cuerpo, aumentando de manera importante la seguridad para el usuario.

PT OSAS é ativado com canais na parede de vedação do pistão. A OSAS é ativada sem deformação do corpo, aumentando ainda mais a segurança do usuário.

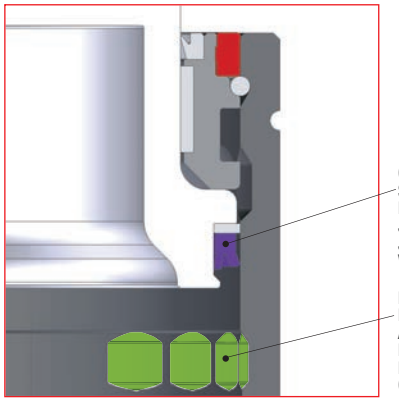

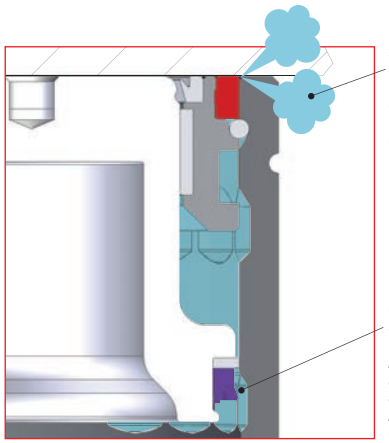

SAFETY

Uncontrolled
Speed
Active
Safety

VDI 3003

Standard on: **RV - RF - RS RG - RT - S SC - H - HF HT - LS**

IT USAS è la combinazione di una zona deformabile della boccola in contatto con l'anello di ritegno a C e delle discontinuità sulla parete di contatto della guarnizione. USAS si attiva senza pericolo strutturale per il cilindro.

EN USAS is the combination of a deformable part of the bushing in contact with the retaining C-ring and the discontinuities on the wall of contact of the seal. USAS self activates without causing structural damages to the cylinder.

DE USAS besteht aus der Kombination eines verformbaren Bereichs der Buchse in Kontakt mit dem Sprengring und den Auslaufrillen auf der Kontaktwand der Dichtung. USAS aktiviert sich ohne die Gefahr von Strukturschäden am Zylinder.

FR USAS est la combinaison d'une zone déformable de la douille en contact avec le joint de retenue à C et des gorges discontinues sur la paroi de contact du joint. USAS s'auto-active sans déformer le corps du ressort-gaz.

ES USAS es la combinación de una zona deformable del casquillo en contacto con el anillo de sujeción y ranuras discontínuas en la pared. USAS se activa sin deformaciones del cuerpo.

PT USAS é a combinação de uma parte deformável da bucha em contato com o anel de retenção em C. Com o trabalho incorreto da haste sobre a buha rompe-se o selo liberando a pressão do cilindro. USAS é ativado, sem causar danos estruturais ao cilindro.

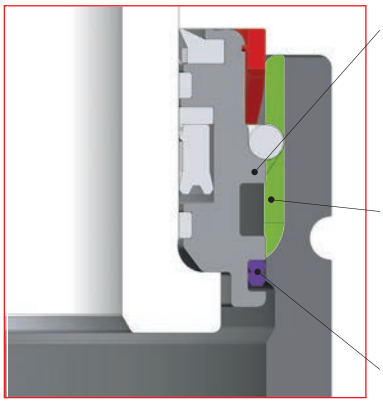

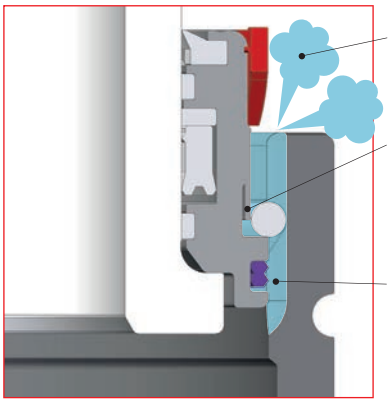

Standard on: **ML - MP - MQ**

IT USAS è la combinazione di una zona deformabile del fondello in contatto con l'anello di ritegno a C e delle discontinuità sulla parete di contatto della guarnizione. USAS si attiva senza pericolo strutturale per il cilindro.

EN USAS is the combination of a deformable part of the bottom plate in contact with the retaining C-ring and the discontinuities on the wall of contact. USAS self activates without causing structural damages to the cylinder.

DE USAS ist die Kombination eines deformierbaren Bereichs am Boden in Kontakt mit dem Sprengring und den Auslaufrillen an den Kontaktwänden der Dichtung. USAS aktiviert sich ohne die Gefahr von Strukturschäden am Zylinder.

FR USAS est la combinaison d'une zone déformable de la douille en contact avec la bague de retenue à C et des gorges discontinues sur la paroi de contact du joint. USAS s'auto-active sans provoquer des détériorations structurelles du ressort-gaz.

ES USAS es la combinación de una zona deformable de la placa inferior en contacto con el anillo de sujeción y ranuras discontínuas en la pared de contacto. USAS se activa sin peligro estructural para el cilindro.

PT USAS é a combinação de uma area deformável da placa base em contacto com o anel de retenção em C, e as ranhuras na parede de vedação corpo-placa base. USAS é ativado para não causar danos estruturais ao cilindro.

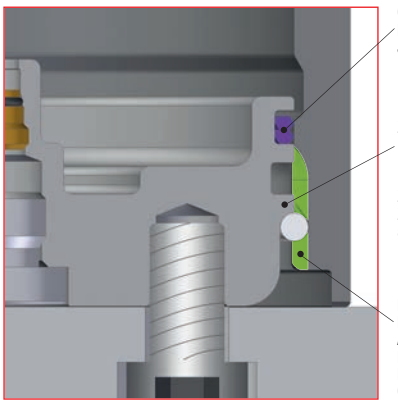

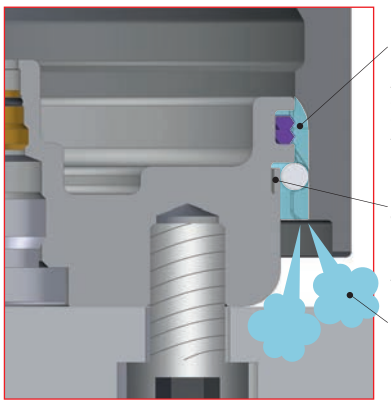

Standard on: KE

IT USAS è la combinazione di una zona deformabile della boccola in contatto con l'anello di ritegno a C e delle discontinuità sulla parete di contatto della guarnizione pistone. USAS si attiva senza pericolo strutturale per il cilindro.

EN USAS is the combination of a deformable part of the bushing in contact with the retaining C-ring and the discontinuities on the wall of contact of the piston seal. USAS self activates without causing structural damages to the cylinder.

DE USAS besteht aus der Kombination eines deformierbaren Bereichs der Buchse in Kontakt mit dem Sprengring und den Auslaufrillen an den Kontaktflächen der Kolbendichtung. USAS aktiviert sich ohne die Gefahr von Strukturschäden am Zylinder.

FR USAS est la combinaison d'une zone déformable de la douille en contact avec le joint de retenue à C et des gorges discontinues sur la paroi de contact du joint corps-piston. USAS s'auto-active sans déformer le corps du ressort-gaz.

ES USAS consiste en la combinación de una zona deformable del casquillo en contacto con el anillo de sujeción y ranuras discontínuas en la pared de contacto cuerpo-pistón. USAS se activa sin deformaciones del cuerpo.

PT USAS é a combinação de uma parte deformável da bucha em contato com o anel de retenção em C, ao se deformar o pistão entra em uma area rebaixada do corpo. USAS é ativada decarregando a pressão evitando danos estruturais ao cilindro.

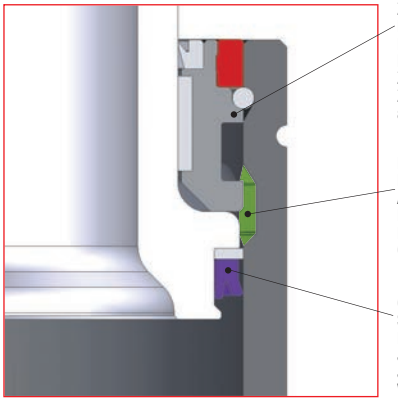

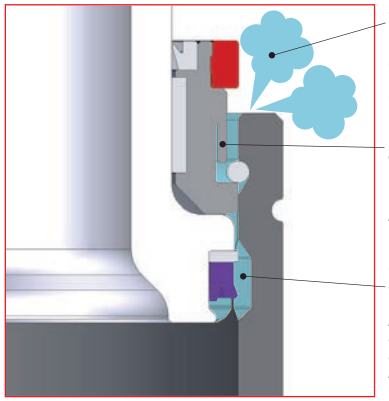

Over Pressure Active Safety

VDI 3003

Standard on: M - MS - RV - RS RF - RG - RT - S SC - H - HF - HT LS - ML - MP - KE

IT OPAS è la combinazione di un setto di rottura calibrato integrale sul fondello o un tappo di rottura montato sul corpo del cilindro, con una fresatura di scarico sulla base di appoggio.

EN OPAS is either the combination of a rupture septum or a rupture plug positioned in the bottom of the cylinders, with an exhaust milling on the bottom contact surface.

DE Je nach Bauweise der Gdf. ist OPAS die Kombination aus einer kalibrierten, im Boden integrierten Sollbruchstelle oder einem im Zylinderkörper eingesetzten Sollbruchstopfen und der Auslaufrille in der Auflagefläche.

FR OPAS est un cloison de rupture calibré intégral sur la plaque inférieure ou un bouchon de rupture monté sur le plateau du cylindre, avec une fraisage de déchargement sur la base d'appui.

ES OPAS es la combinación de un septo de rotura o bien de un tapón de rotura posicionados en la base del cilindro, con un fresado de descarga en la base de apoyo.

PT OPAS é a combinação de un septo calibrado ou uma plugue de ruptura posicionado na parte inferior dos cilindros, com uma saida de escape na superfície inferior de contacto.

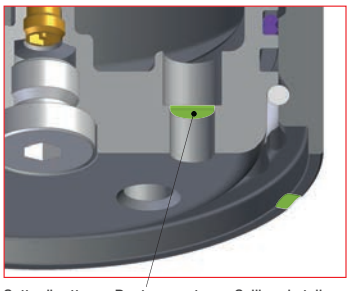

Setto di rottura - Rupture septum - Sollbruchstelle
Cloison de rupture - Septo de ruptura - Septo de ruptura

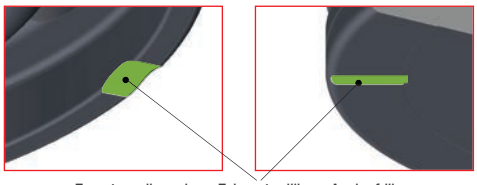

Fresatura di scarico - Exhaust milling - Auslaufrille
Fraisage de déchargement - Fresado de descarga - Aréa de saida de pressão

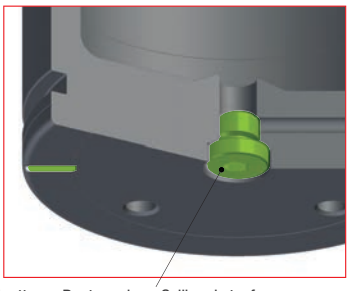

Tappo di rottura - Rupture plug - Sollbruchstopfen
Bouchon de rupture - Tapón de ruptura - Plugue de ruptura

Se si sono attivate le sicurezze, verificare e scaricare eventuali residui di pressione, eliminare le cause del danno e sostituire sempre il cilindro danneggiato.
If the safeguard devices are activated, verify and exhaust the possible pressure leftovers, remove the causes of the damage and replace always the damaged cylinder.
Wenn die sicherungen aktiviert werden, prüfen und entladen Sie die eventuelle Restdruck, beseitigen Sie die Ursachen des Schadens und ersetzen Sie immer die beschädigte Gasdruckfeder.
Quand les sécurités sont activées, vérifier et décharger les eventuels résidus de préssion, éliminer les causes du endommagement et substituer toujours les ressort à gaz endommagés.
Si se activan los dispositivos de seguridad, verificar y descargar toda la presión residual, eliminar las causas de los daños y reemplazar siempre el cilindro dañado.
Se os dispositivos de segurança são ativados, verificar e descarregar qualquer pressão residual, eliminar as causas dos danos e substituir sempre o cilindro danificado.

SAFETY

1381

PED 2014/68/EU

IT
- La progettazione e la produzione dei cilindri a gas Special Springs sono realizzate nel pieno rispetto delle normative vigenti per i recipienti in pressione come stabilito dalla direttiva PED 2014/68/EU e EN 13445:2015.

EN
- The design and manufacturing of Special Springs gas cylinders are in full compliance with the European regulations for high pressure vessels, in accordance with directive PED 2014/68/EU and EN 13445:2015.

DE
- Die Konstruktion und Herstellung der Gasdruckfedern Special Springs erfolgt in Übereinstimmung mit den geltenden Normen für Druckbehälter, wie in der PED Richtlinie 2014/68/EU und EN 13445:2015 festgelegt.

FR
- La conception et la fabrication des ressorts à gaz Special Springs sont en totale conformité avec les législations eu-ropééennes en matière de composants caractérisés haute pression et notamment avec la directive PED 2014/68/EU et EN 13445:2015.

ES
- La proyectación y producción de los cilindros de nitrógeno Special Springs se realizan con pleno respeto de las normativas vigentes para elementos de presión como establece la directiva PED 2014/68/EU y EN 13445:2015).

PT
- O projeto e fabricação de cilindros de Nitrogênio Special Springs estão em total conformidade com as regras Europeias para Cilindros de alta pressão, em conformidade com a directiva PED 2014/68/EU e EN 13445:2015.

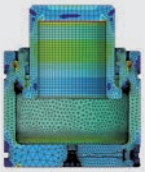

FEM - CAE

IT
- Tutti i prodotti Special Springs sono sviluppati e validati con l'utilizzo dei più avanzati sistemi di analisi FEM (finite element method) e CAE (computer aided engineering).

EN
- All Special Springs products are developed and validated via the use of the most advanced FEM (finite element method) and CAE (computer aided engineering) analysis systems.

DE
- Alle Produkte von Special Springs werden durch die Verwendung der fortschrittlichsten Analysesysteme FEM (finite element method) und CAE (computer aided engineering) entwickelt und validiert.

FR
- Tous les produits Special Springs sont développés et certifi és selon les méthodes FEM (fi nite element method) et CAE (Computer aided engineering).

ES
- Todos los productos Special Springs son desarrollados y validados con la utilización de los más avanzados sistemas de análisis FEM (fi nite element method) y CAE (computer aided engineering).

PT
- Todos os produtos Special Springs são desenvolvidos e validados através da utilização das Técnicas mais avançadas FEM (método de elementos fi nitos) e sistemas de análise do CAE (Engenharia assistida por computador).

> 2.000.000

STRUCTURE OF THE GAS CYLINDER

IT
- Tutti i componenti strutturali delle molle a gas Special Springs sono progettati e costruiti per sopportare minimo 2.000.000 di cicli completi alla massima pressione, temperatura e per ogni tipo di fissaggio.

EN
- All structural components of Special Springs nitrogen cylinders are designed and built to withstand a minimum of 2,000,000 complete cycles at maximum pressure, temperature and for all types of fixings.

DE
- Alle Strukturkomponenten der Special Springs Gasdruckfedern sind konstruiert und hergestellt, um mindestens 2.000.000 komplette Zyklen bei maximalem Druck und Temperatur zu erreichen, unter Verwendung jeder für das jeweilige Modell empfohlener Befestigungsart.

FR
- Tous les composants structuraux des ressorts gaz Special Springs sont conçus et construits pour supporter un minimum de 2 million des cycles complètes à la pression et température maximale pour chaque tipe de fi xation.

ES
- Tutti i componenti strutturali delle molle a gas Special Springs sono progettati e costruiti per supportare minimo 2.000.000 di cicli completi alla massima pressione, temperatura e per ogni tipo di fissaggio.

PT
- Todos os componentes estruturais dos cilindros Special Springs, são projetados e construídos para suportar no mínimo 2.000.000 ciclos com máxima pressão, temperatura e para todos os tipos de dispositivos de fi xação.

Benefits

IT
- Maggiore garanzia di prodotti e componenti sicuri per il cliente.

EN
- Greater assurance of safe products and components for customers.

DE
- verbesserte Sicherheit für den Kunden durch sichere Produkte und Komponenten.

FR
- Plus grande assurance de produits et composants sûrs pour les clients.

ES
- Mayor garantía de productos y componentes seguros para los clientes.

PT
- Maior garantia de produtos e componentes seguros para os clientes.

KNOWLEDGE

IT

- La conoscenza è un elemento fondamentale per azioni quotidiane di successo, più conosciamo meglio facciamo. Questo concetto è da sempre presente nella filosofia del lavoro di Special Springs. Da molti anni Special Springs è impegnata per aumentare la conoscenza dei prodotti e delle loro caratteristiche unitamente alle migliori tecniche di utilizzo attraverso formazioni teoriche e pratiche.

EN

- Knowledge is an essential element for successful daily actions;the more we know, the better we perform. This concept has always been one of Special Springs' core values. For many years the company has committed to increase knowledge of products along with their characteristics and their best utilisations techniques, through theoretical and practical training.

DE

- Fachkenntnis ist ein grundlegendes Element für tagtägliche Tätigkeiten mit Erfolg, je mehr wir wissen, desto besser können wir handeln. Dieses Konzept ist schon immer die Arbeitsphilosophie von Special Springs. Seit vielen Jahren ist Special Springs bestrebt, die Fachkenntnisse rund um die Produkte und ihre technischen Eigenschaften zusammen mit den neuesten Anwendungstechniken durch theoretische und praktische Schulungen zu vertiefen.

FR

- La connaissance est un élément fondamental pour les actions quotidienne de succès, le plus on connaisse, le mieux on fait. Ce concept a été toujours présent dans la philosophie de travail de Special Spring. Depuis plusieurs années Special Spring s'est engagé à augmenter la connaissance des produits et de ses caractéristiques mais aussi aux meilleures techniques d'usage à travers formations théoriques et pratiques.

ES

- El conocimiento es un elemento fundamental para acciones cotidianas que lleven al éxito, cuanto más se conoce mejor se hace. Este concepto ha estado siempre en la fi losofía de trabajo de Special Springs. Special Springs se dedica desde hace muchos años a aumentar su conocimiento sobre los productos y sus características, así como a mejorar las técnicas de uso a través de formaciones teóricas y prácticas.

PT

- O conhecimento é um elemento essencial para o sucesso das ações diárias; Quanto mais soubermos, melhor nós executamos. Este conceito sempre foi um dos valores da Special Springs. Por muitos anos a empresa se comprometeu a aumentar os conhecimentos dos produtos juntamente com suas características e suas melhores técnicas de utilizações através de formação teórica e prática.

TECHNICAL SUPPORT

IT

- Special Springs, da sempre impegnata per migliorare il supporto tecnico agli utilizzatori, fornisce con ogni cilindro o suo componente un completo foglio di istruzioni multilingua.

EN

- Special Springs has always been committed to provide technical support for users; we provide a thorough multilingual instruction sheet with each cylinder or component.

DE

- Special Springs ist schon immer bestrebt, den technischen Support der Anwender zu verbessern, für jede Gasdruckfeder und deren Komponenten ist eine mehrsprachige Betriebsanleitung verfügbar.

FR

- Special Springs s'est engagée depuis longtemps pour améliorer le support technique aux utilisateurs, elle fournit avec chaque ressort ou composant un papier d'instruction multilingue complet.

ES

- Es prioridad desde siempre para Special Springs la mejora del soporte técnico al usuario, para lo que entrega un completo manual en varios idiomas con el cilindro o componente.

PT

- A Special Springs é empenhada em fornecer suporte técnico para usuários; Nós fornecemos uma folha de instruções multilingue completa com cada cilindro ou componente.

Benefits

IT

- Maggiore conoscenza degli utilizzatori sui reali vantaggi offerti dai cilindri a gas Special Springs.
- Maggiore conoscenza degli utilizzatori sui più corretti metodi di utilizzo con vantaggi economici e di sicurezza.
- Maggiore sensibilità e coscienza sull'importanza delle sicurezze attive sui cilindri a gas.

EN

- Increased knowledge of users, in regards to the real benefits given by Special Springs gas cylinders.
- Increased knowledge of users on how to appropriately use the products, hence benefit from cost and production efficiency.
- Increased knowledge of users on the importance of our gas cylinders safety features.

DE

- größeres Wissen der Anwender über die effektiven Vorteile der Special Springs Gasdruckfedern.
- größeres Wissen der Anwender über die am besten geeigneten Anwendungsverfahren mit wirtschaftlichen und sicherheitsrelevanten Vorteilen.
- besseres Verständnis bzw. Bewusstsein der Wichtigkeit der aktiven Sicherheitselemente an Gasdruckfedern.

FR

- Majeure connaissance des utilisateurs sur les avantages réels offert par les ressorts à gaz Special Springs.
- Majeure connaissance des utilisateurs sur les méthodes de usage plus corrects avec avantages économiques et de sécurité.
- Majeure sensibilité et conscience sur l'importance des sécurités actives dans les ressorts à gaz.

ES

- Mayor conocimiento por parte del usuario de las ventajas ofrecidas por los cilindros Special Springs.
- Mayor conocimiento por parte del usuario de los métodos correctos para aumentar la seguridad de uso.
- Mayor sensibilidad y conciencia de la importancia de la seguridad activa en los cilindros de nitrógeno.

PT

- Aumento do conhecimento dos usuários, no que diz respeito aos benefícios reais dados pelo Cilindro de Nitrogênio Special Springs.
- Aumento do conhecimento dos usuários sobre como usar adequadamente os produtos, portanto, aumentando a efi ciência de custo e produção.
- Aumento do conhecimento dos usuários sobre a importância de nossas características de segurança do cilindros de Nitrogênio.

OPERATING INSTRUCTION

IT Caricare soltanto con GAS AZOTO (N2).

EN Charge only with NITROGEN GAS (N2).

DE Gasdruckfedern dürfen nur mit STICKSTOFF GAS (N2) gefüllt werden.

FR Charge seulement avec du GAZ AZOTE (N2).

ES Cargar únicamente con GAS NITROGENO (N2).

PT Carregar somente com GÁS de NITROGÊNIO (N2).

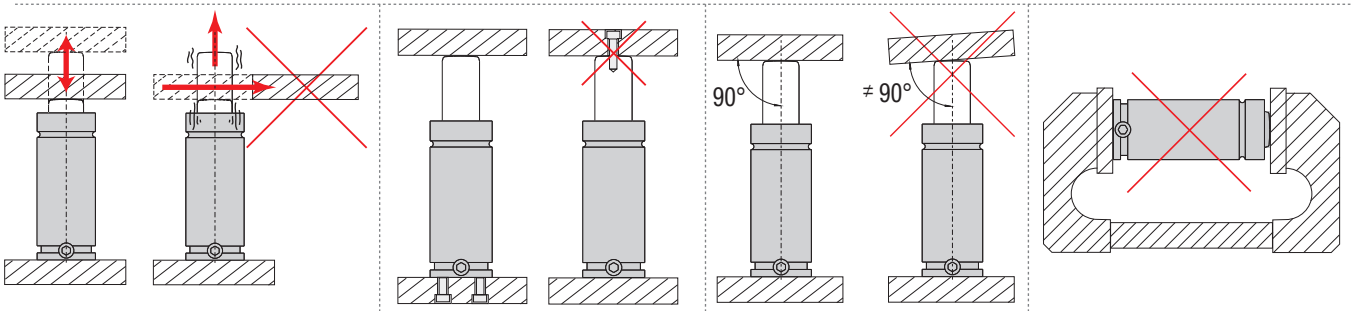

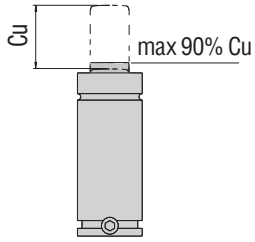

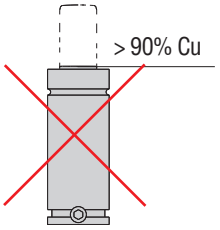

IT Tutti i cilindri Special Springs sono dotati di riserva corsa da 1 a 3 mm (escluso M90/TBM-TBI-TEM). Quindi il valore nominale Cu è completamente utilizzabile. Si raccomanda comunque di non eccedere il 90% di Cu nell'uso pratico per prevenire eventuali extra-corse, causate da modifiche o errori sugli stampi, con danni irreparabili ai cilindri e gravi rischi per la sicurezza.

EN All Special Springs nitrogen cylinders are designed with a stroke reserve from 1 to 3 mm (except M90/TBM-TBI-TEM). Therefore, the nominal value (Cu) is fully applicable. However, it is recommended not to exceed 90% of Cu in practical use in order to avoid the risk of any extra stroke caused by changes or errors in tools. This would result in irreparable damages to the cylinders and serious danger to personnel.

DE Alle Gasdruckfedern von Special Springs verfügen über eine Hubreserve von 1 ÷ 3mm (Ausnahme: M90/TBM-TBI-TEM). Daher kann der Nennwert Cu zu 100% verwendet werden. Wir empfehlen jedoch, im praktischen Einsatz nur 90% des angegebenen Cu-Wertes zu verwenden, um einen eventuellen Überhub zu vermeiden, der durch Änderung oder Fehlfunktion des Werkzeuges verursacht werden kann und zu irreparablen Schäden an der Gasdruckfeder und an dem Werkzeug führen kann, sowie ein schwerwiegendes Sicherheitsrisiko für den Anwender darstellt.

FR Tous les cylindres Special Springs sont munis d'une course de réserve de 1 ÷ 3 mm (sauf M90/TBM-TBI-TEM). Donc, la valeur nominale Cu peut être utilisée complètement. Il est en tout cas conseillé de ne pas dépasser 90% de Cu lors de l'utilisation normale, pour éviter toute course supplémentaire engendrée par des modifications ou des erreurs sur les moules; ce qui entraînerait des dommages irréparables aux cylindres et de graves risques pour la sécurité.

ES Todos los cilindros Special Springs están dotados de un margen adicional de carrera de 1 ÷ 3 mm (excepto M90/TBM-TBI-TEM). Esto significa que el valor nominal Cu es completamente utilizable. De todos modos, no deja de ser aconsejable no superar el 90% de Cu en el uso práctico, para así prevenir posibles sobre carreras, causadas por modificaciones o errores en los moldes, con daños irreparables a los cindros y graves riesgos de seguridad.

PT Todos os cilindros Special Springs dispõem de reserva para pressões súbitas de 1 ÷ 3 mm (excluindo o M90/TBM-TBI-TEM). Assim, o valor nominal Cu é completamente utilizável. Recomenda-se no entanto que não se excedam os 90% de Cu na utilização prática para prevenir eventuais pressões súbitas mais fortes, causadas por modificações ou erros nas estampagens, com danos irreparáveis nos cilindros e graves riscos para a segurança.

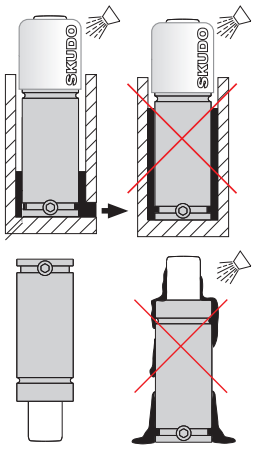

IT In presenza di contaminanti liquidi o solidi utilizzare cilindri con SKUDO. In mancanza di cilindri con SKUDO, un miglioramento significativo si ottiene installando i cilindri capovolti.

EN In presence of liquid or solid contaminants, use cylinders with SKUDO. In absence of cylinders with SKUDO protection, a significant improvement could be obtained by mounting the cylinders in upside-down position.

DE Verwenden Sie in Bereichen, in denen die Gasdruckfeder dem Einwirken von Flüssigkeiten oder Schmutzpartikeln ausgesetzt ist, Gasdruckfedern mit SKUDO. Wenn SKUDO nicht eingesetzt werden kann, empfehlen wir, die Gasdruckfeder mit nach unten stehendem Kolben zu montieren, um das Eindringen der Flüssigkeit oder der Schmutzpartikel in die Gasdruckfeder zu vermeiden.

FR En presence de contaminants liquides ou solides, utiliser les ressorts avec SKUDO. En absence de ressorts avec SKUDO, une amélioration importante peut s'obtenir en montant les cylinders renversés.

ES En presencia de contaminantes líquidos o sólidos, utilize cilindros con SKUDO. A falta de cilindros con SKUDO, una notable mejora se obtiene montando los cilindros volcados.

PT Em presença de contaminadores líquidos o sólidos, usar cilindro com SKUDO. Na falta de cilindro com protecão SKUDO, obtém-de uma significativa melhoria montando os cilindros de cabeça para baixo.

OPERATING INSTRUCTION

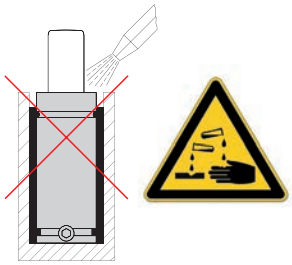

IT Evitare il contatto di fluidi aggressivi (soda e cloruri) con i cilindri. Se utilizzati per la pulizia dello stampo, si raccomanda di rimuovere dai cilindri ogni residuo.

EN Avoid any contact of cylinders with aggressive fluids (soda or chlorites). If they are used for cleaning the tools, we recommend to carefully remove any residue from cylinders.

DE Werden aggressive Flüssigkeiten (Soda oder Chloride) zur Reinigung des Werkzeugs verwendet, dürfen sie nicht mit den Gasdruckfedern in Kontakt kommen bzw. jeglicher Rückstand davon muss von den Gasdruckfedern entfernt werden.

FR Eviter le contact des liquides agressifs (soda ou chlorites) avec les cylindres. S'ils sont utilisés pour le nettoyage des moules, il est recommandé d'enlever tous résidus sur les cylindres.

ES Evite el contacto de fluidos agresivos (soda o cloruro) con los cilindros. Si se utilizan para la limpieza de herramientas, recomendamos eliminar cualquier residuo de los cilindros.

PT Evitar qualquer contacto dos cilindros com fluidos agressivos (soda ou cloretos). Se forem usados para limpar ferramentas, recomendamos remover todos os resíduos dos cilindros.

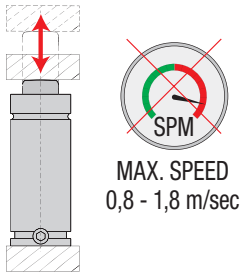

IT Non confondere la velocità massima con il numero massimo di cicli al minuto, come raccomandato per ogni modello.

EN Do not confuse the maximum speed with the maximum number of strokes per minute, as recommended for each model.

DE Die maximale Geschwindigkeit darf nicht mit der maximalen Hubzahl pro Minute verwechselt werden, wie dies für jedes Modell empfohlen wird.

FR Ne confondez pas la vitesse maximale avec le nombre maximal de coups par minute, comme recommandé pour chaque modèle.

ES No debe confundirse la velocidad máxima con el número máximo de golpes por minuto, tal como se recomienda para cada modelo.

PT Não confunda a velocidade máxima com o número máximo de golpes por minuto, conforme o recomendado para cada modelo.

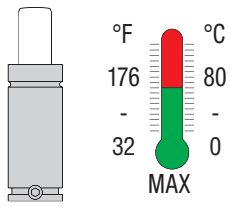

IT Temperatura di funzionamento.

EN Operating temperature.

DE Arbeitstemperatur.

FR Température de fonctionnement.

ES Temperatura de funcionamiento.

PT Temperatura de operação.

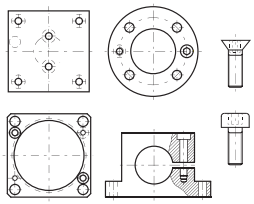

IT Si raccomanda di installare sempre i cilindri con gli appositi elementi di fissaggio.

EN It is always recommended to install the gas springs with the suitable fixing elements.

DE Es wird immer empfohlen, die Gasdruckfedern mit den geeigneten Befestigungselementen zu fixieren.

FR Il est toujours recommandé de fixer les cylindres avec les éléments de fixation appropriés.

ES Se recomienda fijar siempre los cilindros con los elementos de fijación apropiados.

PT É aconselhável fixar sempre os cilindros com os elementos de fixação adequados.

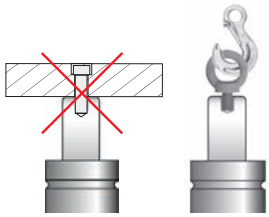

IT Utilizzare il foro filettato sullo stelo solo per la movimentazione dei cilindri.

EN Use the threaded hole on the rod only for gas springs' handling.

DE Die Gewindebohrung an der Kolbenstange ist ausschließlich für die Handhabung der Gasdruckfedern zu verwenden.

FR Utiliser le trou fileté sur la tige uniquement pour la manipulation des cylindres.

ES Utilizar el orificio roscado en el vastago solo para la manipulación de los cilindros.

PT Utilizar o furo roscado na haste só para el manuseio dos cilindros.

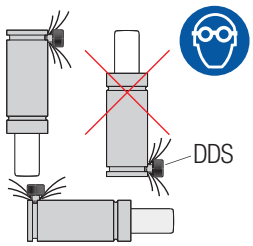

IT Durante lo scaricamento con l'uso del dispositivo DDS, orientare il flusso del gas in direzione opposta all'operatore.

EN When discharging by using a DDS device, direct the gas flow away from operator.

DE Während der Entladung mit Hilfe der DDS-Vorrichtung, richten Sie den Gasfluss in die dem Bediener entgegengesetzte Richtung.

FR Pendant le déchargement à l'aide du dispositif DDS, orientez le flux du gaz dans la direction opposée à l'opérateur.

ES Durante la descarga mediante el dispositivo DDS, orientar el flujo del gas en dirección contraria al operador.

PT Durante a descarga com a utilização do dispositivo DDS, orientar o fluxo de gás na direcção oposta à do operador.

OPERATING INSTRUCTION

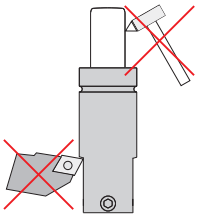

IT Evitare qualsiasi lavorazione meccanica o impatto su corpo e stelo.

EN Avoid any mechanical tooling or impact on the body and the rod.

DE Vermeiden Sie mechanische Bearbeitungen jeder Art oder sonstige Einwirkungen auf Körper und Kolbenstange.

FR Éviter toute opération mécanique ou impact sur le corps et la tige.

ES Evitar toda clase de elaboraciones mecánicas o de impactos en el cuerpo y en el vástago del cilindro.

PT Evitar qualquer trabalho mecânico ou impacto sobre o corpo e haste.

IT Se un cilindro ha la struttura danneggiata, prima di qualsiasi manipolazione,scaricare completamente la pressione.

EN If a cylinder has structural damage, fully exhaust all pressure before any form of handling.

DE Weist die Gasdruckfeder Beschädigungen auf, muss vor dem Eingriff der Druck vollständig abgelassen werden.

FR Si la structure d'un cylindre est endommagée, décharger complètement la pression, avant d'effectuer toute opération.

ES Si un cilindro presenta desperfectos en su estructura, descargar completamente la presión antes de proceder a revisarlo.

PT Se um cilindro tiver a estrutura danificada, antes de qualquer manipulação, descarregar completamente a pressão.

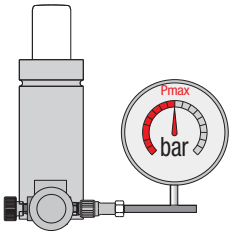

IT Durante il caricamento non eccedere la pressione massima raccomandata per ogni modello.

EN When charging do NOT exceed the maximum recommended pressure for each model.

DE Überschreiten Sie während der Ladung den für jedes Modell angegebenen Druckwert nicht.

FR Durant le chargement, il est conseillé de ne pas dépasser la pression maximum recommandée pour chaque modèle.

ES Durante la carga, no superar nunca la presión máxima aconsejada para cada modelo.

PT Durante a carga, não exceder a pressão máxima recomendada para cada modelo.

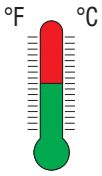

± 1 °C = ?

approx. ± 0,33 % P

IT Ogni variazione della temperatura, rispetto al valore nominale di calcolo di 20°C, determina una variazione della pressione del gas (P).

EN Any variation in temperature, respect to the nominal calculation value of 20°C, causes a change in gas pressure (P).

DE Jede Temperatur, die vom berechneten Nennwert (20°C) abweicht, bewirkt eine Änderung des Gasdrucks (P).

FR Chaque modification de la température, par rapport à la valeur nominale de calcul de 20°C, détermine une modification de la pression du gaz (P).

ES Toda variación de la temperatura con respecto al valor nominal de cálculo de 20°C, determina una variación de la presión del gas (P).

PT Qualquer variação da temperatura, no que respeita ao valor nominal de cálculo de 20°C, determina uma variação da pressão do gás (P).

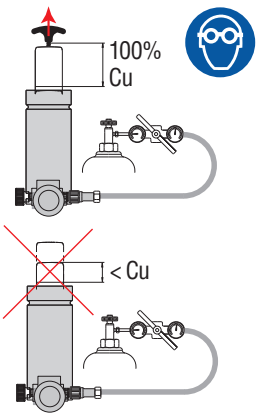

IT Durante il caricamento assicurarsi che lo stelo sia estratto al 100%. Per cilindri privi di foro filettato sullo stelo, caricare inizialmente con 5 bar (75 psi) per estrarre completamente lo stelo, quindi procedere fino alla pressione desiderata.

EN Ensure that the rod is 100% extracted when charging. For cylinders without a threaded hole on the rod, initially charge to 5 bar (75 psi) to extract the rod completely, then charge to the required.

DE Stellen Sie vor der Befüllung der Gasdruckfeder sicher, dass die Kolbenstange ganz ausgefahren ist. Befüllen Sie Gasdruckfedern ohne Gewinde am Ende der Kolbenstange anfangs nur mit 5 bar (75 psi), um die Kolbenstange vollständig in die ausgefahrene Position zu drücken. Steigern Sie anschließend den Befülldrück auf den gewünschten Wert.

FR Durant le chargement, s'assurer que la tige soit complètement sortie. Les cylindres sans trou fileté sur la tige doivent être chargés initialement sous 5 bars (75 psi) pour extraire complètement la tige; procéder ensuite jusqu'à la pression désirée.

ES Durante la carga, asegurarse de que el vástago sea extraído al 100%. En cilindros con vástago sin orificio roscado, comenzar con una carga de 5 bar (75 psi) a fin de extraer completamente el vástago. Sólo entonces proseguir cargando hasta alcanzar la presión deseada.

PT Durante a carga, assegure-se de que o haste esteja totalmente extraido. Para cilindros sem orifício roscado no haste, carregar inicialmente com 5 bar (75 psi) para extrair completamente haste, depois, proceder até à pressão desejada.

IT Prima di gettare qualsiasi cilindro a gas scaricare completamente la pressione.

EN Before disposing of a gas spring ensure that all residual pressure is fully exhausted.

DE Vor der Entsorgung muss jede Gasdruckfeder vollständig entleert werden.

FR Décharger complètement la pression, avant de jeter tout cylindre à gaz.

ES Nunca tirar un cilindro de gas sin antes haber descargado por completo la presión.

PT Antes de deitar fora qualquer cilindro a gás, descarregar completamente a pressão.

USER INFORMATION

LINKABLE

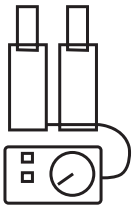

IT Tutti i cilindri collegabili a sistema e specificatamente codificati sono forniti senza valvola unidirezionale, senza pressione e con il solo tappo di chiusura del foro di collegamento (escluso M90, M200, RV170, RV320). Nel caso si desideri trasformare dei cilindri autonomi in cilindri collegabili a sistema è sufficiente ordinare i raccordi e i tubi necessari e seguire le istruzioni specifiche per ogni serie pubblicate nel sito www.specialsprings.com.

EN All cylinders which can be connected to the system and are specifically coded are supplied without the one-way valve, without pressure and with only the closure plug of the connection hole (excluding M90, M200, RV170, RV320). If you wish to convert independent cylinders into system-connectable cylinders, order the necessary hoses and connections, and follow the specific instructions for every series published on site www.specialsprings.com.

DE Alle Gasdruckfedern, die in ein Verbundsystem integrierbar sind und mit entsprechenden Zusatzangaben bestellt werden, werden ohne Rückschlagventil, unbefüllt und nur mit der in der Anschlussöffnung montierten Verschlussschraube geliefert (Ausnahmen: M90, M200, RV170, RV320). Sollen eigenständig arbeitende Gasdruckfedern für die Nutzung in einem Verbundsystem umgebaut werden, genügt es, die erforderlichen Anschlüsse und Leitungen zu bestellen, sowie die für die jeweilige Serie auf der Internetseite www.specialsprings.com veröffentlichten Hinweise zu beachten.

FR Tous les cylindres qui peuvent être raccordés au système et qui possèdent un code d'identification spécifique sont fournis sans valve unidirectionnelle ni pression. Seul le bouchon de fermeture de l'orifice de raccordement est fourni (sauf M90, M200, RV170, RV320). Au cas où l'on souhaiterait transformer des cylindres autonomes en cylindres à système raccordables, il suffira de commander les raccords et les tubes nécessaires puis de suivre les instructions spécifiques de chaque série, publiées sur le site www.specialsprings.com.

ES Todos los cilindros que se pueden conectar al sistema, específicamente codificados, se suministran sin válvula unidireccional y sin presión, sólo con el tapón de cierre del orificio de conexión (menos M90, M200, RV170, RV320). Si se desea transformar cilindros autónomos en cilindros conectables a sistema, es suficiente pedir los empalmes y los tubos necesarios y seguir las instrucciones específicas para cada serie publicadas en el sitio www.specialsprings.com

PT Todos os cilindros que podem ser ligados ao sistema e especificamente codificados são fornecidos sem válvula unidireccional, sem pressão e somente com a tampa de fechamento do furo de ligação (Não incluída M90, M200, RV170, RV320). Caso queira-se transformar cilindros autónomos em cilindros acopláveis ao sistema, basta encomendar as conexões e tubos necessários e seguir as instruções específicas para cada série, publicadas no site www.specialsprings.com.

LASER MARKING

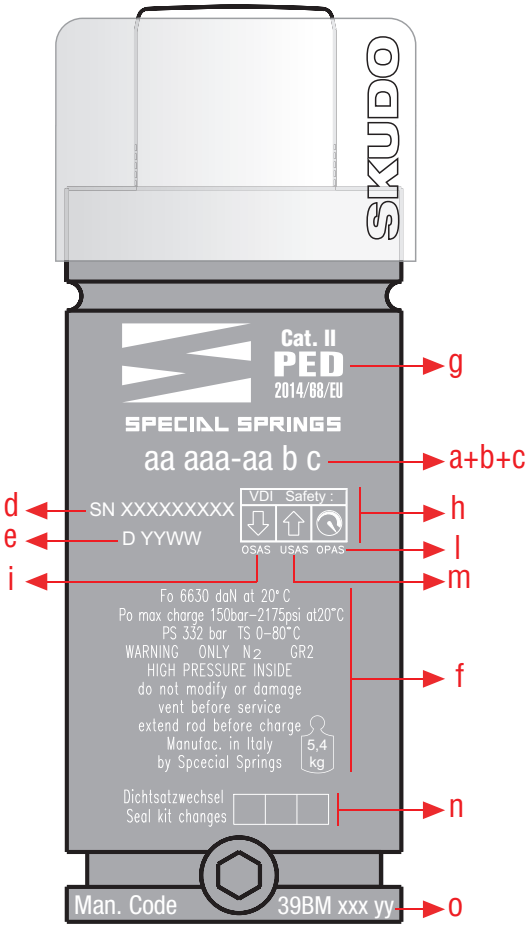

IT
a) Codice modello
b) Indice revisione
c) Versione collegabile a sistema
d) Lotto di produzione
e) Data di produzione
f) Info generali
g) Categoria PED
h) Pittogrammi sicurezza
i) Sicurezza attiva oltre corsa
l) Sicurezza attiva oltre pressione
m)Sicurezza attiva ritorno incontrollato
n) Numero cambi guarnizione
o) Kit manutenzione

EN
a) Model code
b) Revision indicator
c) Hosed-system version
d) Batch number
e) Production date
f) General info
g) PED Category
h) Safety pictograms
i) Over stroke active safety
l) Over pressure active safety
m)Uncontrolled speed active safety
n) Number of seal replacements
o) Maintenance kit

DE
a) Modellcode
b) Revisionsindex
c) Version kann an das System angeschlossen werden
d) Produktionsposten
e) Herstellungsdatum
f) Allgemeine Informationen
g) PED Kategorie
h) Sichereitspiktogramme
i) Aktiven überhubsicherung
l) Aktive überdruck-sicherheitsvorrichtung
m)Aktiver Schutz bei Unkontrolliertem Rückhub
n) Anzahl der Dichtungswechsel
o) Wartung set

FR
a) Référence modèle
b) N de révision
c) Version pouvant être reliée à un système
d) Lot de production
e) Date de fabrication
f) Information générales
g) Catégorie PED
h) Pictogrammes de sécurité
i) Securite active outre-course
l) Securite active outre-pression
m)Securité Active pour Rétour Incontrôlé
n) Nombre de remplacements du joints
o) Set manutention

ES
a) Código de modelo
b) Indicador de revisión
c) Versión conectable a sistema
d) Lote de producción
e) Fecha de fabricación
f) Información general
g) Categoría PED
h) Pictrogramas de seguridad
i) Seguridad activa de fin de carrera
l) Seguridad activa ultra presión
m)Securidad Activa de Retorno Incontrolado
n) Número dos cambios de la junta
o) Set mantenimiento

PT
a) Código do modelo
b) Índice de revisão
c) Versão que pode ser ligada em sistema
d) Lote de produção
e) Data de produção
f) Informações gerais
g) Classe de risco PED
h) Pictogramas de segurança
i) Segurança ativa mecânica
l) Segurança ativa sobrepressão
m)Segurança para Retorno da Haste
n) Número das substituições da vedação
o) Manutenção de conjunto

USER INFORMATION

SPECIAL SPRINGS

IT Per tutti i modelli è indicata nel catalogo sia la forza finale isotermica che politropica.

La forza finale isotermica con 100% Cu, è un valore calcolato in condizioni statiche e può essere considerato sufficiente nell'uso normale dei cilindri.

La forza finale politropica con 100% Cu, è un valore più realistico quando il cilindro è in lavoro. Essendo però la temperatura del gas all'interno del cilindro non costante e dipendente da corsa nominale, corsa di lavoro, velocità della pressa, no. di cicli al minuto, volume del gas, temperatura dell'ambiente e di lavoro, etc. la forza finale politropica dovrebbe essere calcolata caso per caso.

Special Springs, comunque a titolo informativo, indica anche i valori approssimati di forza politropica calcolati a regime termico, 100% Cu, 30 SPM, velocità pressa costante e temperatura ambiente 20°C. Per maggiori informazioni contattare Special Springs.

EN For all models, both the isothermal and polytropic end force are indicated in the catalog.

The isothermal end force with 100% Cu, is a value calculated on static conditions and can be considered sufficient for a normal use of cylinders.

The Polytropic end force, with 100% Cu, is a more realistic value when the cylinder is working. Though, being the temperature of the gas inside the cylinder not constant, and depending from several factors, the Polytropic end force should be calculated case by case. The influencing factors are, for example: nominal stroke, working stroke, press speed, number of cycles per minutes, gas volume, working and environment temperature etc.

Special Springs, for user information, indicates the approximated values of polytropic force calculated at thermal regime, 100% Cu, ca 30 SPM costant press speed and room temperaturet at around 20°C. For further details please contact Special Springs.

F_{1i}

isothermal end force

DE In unserem Katalog ist für alle Gasdruckfedern sowohl die isotherme als auch die polytrope Endkraft angegeben.

Die isotherme Endkraft bei 100 % Cu ist ein Wert, der unter beinahe statischen Bedingungen ermittelt worden ist und der unter normalen Einsatzbedingungen der Gasdruckfeder als ausreichend genau betrachtet werden kann.

Die polytrope Endkraft bei 100 % Cu ist ein realistischer Wert wenn die Gasdruckfeder in Betrieb ist. Da jedoch die Temperatur des Stickstoffs im Inneren der Gasdruckfeder nicht konstant ist und abhängig ist vom Nominalhub, vom Arbeitshub, der Pressengeschwindigkeit, der Anzahl Zyklen pro Minute, dem Volumen des Stickstoffgases, der Raum- und Arbeitstemperatur, etc. müsste die polytrope Endkraft für jede Anwendung berechnet werden.

Special Springs gibt jedoch zur Information auch den annähernde Wert der polytropen Kraft an, der bei stabiler Betriebstemperatur, 100 % Cu, ca. 30 Hübe pro Minute, konstanter Pressengeschwindigkeit und ca. 20°C Raumtemperatur ermittelt worden ist. Für weitere Informationen wenden Sie sich bitte direkt an Special Springs.

F_{1p}

Polytropic end force

FR Pour tous les modèles, on indique sur le catalogue, soit la force finale isothermique, que celle polytrophique.

La force finale isothermique, avec 100% de Cu, est une valeur calculée en conditions statiques et peut être considérée suffisante en l'usage normal des cylindres.

La force finale polytrophique, avec 100% de Cu, est une valeur plus réaliste lorsque le cylindre est en travail. Toutefois, étant donné que la température du gaz à l'intérieur du cylindre n'est pas constante et dépend de différents facteurs, tels que: course nominale, course de travail, vitesse de la presse, nombre de cycles par minute, volume du gaz, température de travail et de l'environnement etc., la force polytrophique finale doit être calculé au cas par cas.

Special Springs, cependant, à des buts d'information, indique aussi les valeurs approximés de la force polytrophique calculés au régime thermique, 100% Cu, environ. 30 SPM, presse à vitesse constante et température ambiante 20 °C. Pour tous renseignements complémentaires, contactez Special Springs.

ES Para todos los modelos, se indica en el catálogo, tanto la fuerza final isotérmica, como la politrópica.

La fuerza final isotérmica con 100% de Cu, es un valor calculado en condiciones estáticas y puede considerarse suficiente en el uso normal de los cilindros.

La fuerza politrópica finale con 100% de Cu, es un valor más realista cuando el cilindro está en trabajo. Dado que, sin embargo, la temperatura del gas dentro del cilindro no es constante y depende de varios factores, tales como: carrera nominal, la carrera de trabajo, la velocidad de la prensa, el número de ciclos por minuto, el volumen del gas, la temperatura del medio ambiente y trabajo, etc., la fuerza politrópica final debe calcularse caso por caso.

Special Springs, sin embargo, a titulo informativo, indica los valores aproximados de fuerza politrópica calculados a régimen térmico, 100% Cu, ca. 30 SPM, velocidad constante de prensas y temperatura ambiente a 20 °C. Para más informaciónes póngase en contacto con Special Springs.

PT Para todos os modelos, é indicada no catálogo tanto a força final isotérmica, que a politrópica.

A força final isotérmica com 100% de Cu, é um valor calculado em condições estáticas e pode ser considerada suficiente, em utilização normal dos cilindros.

A força politrópica finale com 100% de Cu, é um valor mais realista quando o cilindro estiver em trabalho. Uma vez que, no entanto, a temperatura do gás no interior do cilindro não é constante e depende de vários factores, tais como: curso nominal, o curso de trabalho, a velocidade de impressão, o número de ciclos por minuto, o volume do gás, a temperatura do ambiente e trabalhar etc., o a força politrópica final deve ser calculado caso a caso.

Special Springs, no entanto, para fins de informação, indica os valores aproximados da força politrópica calculados a regime térmico 100% Cu, ca. 30 SPM, velocidade constante de prensas e temperatura ambiente a. 20 °C. Para mais informações contacte Special Springs.

$$F_0 = P \cdot S$$

IT Per calcolare la forza iniziale (Fo) di un cilindro a gas è sufficiente moltiplicare la pressione di caricamento massima (P) per l'area di tenuta, stelo o pistone, della guarnizione (S).

EN To calculate the initial force (Fo) of each gas cylinder, multiply the maximum charging pressure (P) to the area of sealing (S), rod or piston, of the gasket seal.

DE Zur Berechnung der Anfangskraft (Fo) einer Gasdruckfeder, muss der angegebene maximale Befülldrück (P) mit der von der Dichtung abgedichteten Fläche an der Kolbenstange oder Kolben (S) multipliziert werden.

FR Pour calculer la force initiale (Fo) d'un cylinder à gaz, il suffit de multiplier la pression maximum de chargement (P) pour la surface de retenue, tige ou piston, du joint (S).

ES Para calcular la fuerza inicial (Fo) de un cilindro de gas, se multiplica la presión máxima de carga (P) poe el área de junta, vástago o pistón, de la guarnición(S).

PT Para calcular a força inicial (Fo) de um cilindro a gás, basta multiplicar a pressão de carga máxima (P) pela área de estanquidade do haste/pistão, da guarnição.

Isothermal force

Metric units

$$F_{x_i} = P \cdot S \cdot \left(\frac{1}{1 - \frac{S}{V_0} \cdot \frac{C_x}{10}} \right)^n$$

Imperial units

$$F_{x_i} = P \cdot S \cdot \left(\frac{1}{1 - \frac{S}{V_0} \cdot C_x} \right)$$

Tab. 1

P	n
≤100 bar	1,09
150 bar	1,19
200 bar	1,31

IT Per calcolare la forza intermedia isoterma (Fx_i) ad una determinata corsa di lavoro (Cx) applicare la formula sostituendo i relativi valori numerici. L'esponente (n) varia in funzione della pressione di caricamento (P) come indicato nella Tab.1. Per valori intermedi di pressione è possibile calcolare il valore di (n) proporzionalmente.

EN To calculate the intermediate isothermal force (Fx_i) to a specific working stroke (Cx), use the formula by replacing the relative numeric values. The exponent (n) varies in function of the charging pressure (P) as indicated in Tab.1. For intermediate pressure values, it is possible to calculate the (n) value proportionally.

DE Zur Berechnung der isothermischen Zwischenkraft (Fx_i) bei einem bestimmten Arbeitshub (Cx) verwenden Sie die nebenstehende Formel und setzen Sie entsprechend die im Katalog angegebenen Werte ein. Der Exponent (n) ist abhängig von dem Befülldrück (P). Mit Hilfe der Angaben in der Tab.1 können Zwischenwerte des Druckes proportional berechnet werden.

FR Pour calculer la force intermédiaire isothermique (Fx_i) d'un ressort à gaz à une course de travail saisi (Cx), vous devez utiliser cette formule en substituant les chiffres relatives aux valeurs numériques. L'Exposant (n) varie en fonction de la pression de chargement (P), comme montré dans le Tab.1. Pour les valeurs intermédiaires de pression, il est possible de calculer la valeur (n) de façon proportionnelle.

ES Para calcular la fuerza isoterma intermedial (Fx_i) para una carrera de trabajo determinada (Cx) aplicar la fórmula mediante la sustitución de los valores numéricos correspondientes. El exponente (n) varía en función de la presión de carga (P) como se muestra en Tab.1.Para valores intermedios de presión, es posible calcular el valor de (n) de manera proporcional.

PT Para calcular a força isotérmica intermediária (Fx_i) para um determinado curso de trabalho (Cx) aplicar a fórmula através da substituição dos valores numéricos relevantes. O expoente (n) varia in função da pressão de carga (P), como mostrado na Tab.1.Para os valores intermédios de pressão, é possível calcular o valor de (n) proporcionalmente.

Polytropic force

Metric units

$$F_{x_p} = P \cdot S \cdot \left(\frac{1}{1 - \frac{S}{V_0} \cdot \frac{C_x}{10}} \right)^{1,58}$$

Imperial units

$$F_{x_p} = P \cdot S \cdot \left(\frac{1}{1 - \frac{S}{V_0} \cdot C_x} \right)^{1,58}$$

IT Per calcolare un valore approssimato di forza intermedia politropica (Fx_p) ad una determinata corsa di lavoro (Cx) applicare la formula sostituendo i relativi valori numerici. L'esponente (n) per la forza politropica può essere assunto pari a 1,58 per la maggior parte delle normali applicazioni.

EN To calculate the approximated value of polytropic intermediate force (Fx_p) to a specific working stroke (Cx), use the formula by replacing the relative numeric values. The exponent (n) for the polytropic force shall be assumed to be equal to 1,58 for the majority of normal applications.

DE Zur Berechnung der ungefähren polytropischen Zwischenkraft (Fx_p) bei einem bestimmten Arbeitshub (Cx) verwenden Sie die nebenstehende Formel und setzen Sie entsprechend die im Katalog angegebenen Werte ein. Der Exponent (n) beträgt im Normalfall 1,58.

FR Pour calculer la valeur de force polytrophique intermédiaire (Fx_p) d'un ressort à gaz à une course de travail saisie (Cx), vous devez utiliser cette formule en substituant les chiffres relatives aux valeurs numériques. L'Exposant (n) peut être assumé comme 1,58 pour la majorité d'utilisations courantes.

ES Para calcular un valor aproximado de la fuerza intermedia politrópica (Fx_p) para una carrera de trabajo determinada (Cx), aplicar la fórmula mediante la sustitución de los valores numéricos correspondientes. El exponente (n) para la fuerza de politrópico puede suponerse como igual a 1,58 para la mayoría de las aplicaciones normales.

PT Para calcular um valor aproximado da força intermediária politrópica (Fx_p) para um determinado curso de trabalho (Cx), aplicar a fórmula através da substituição dos valores numéricos relevantes. O expoente (n) para a força politrópica pode ser assumido como sendo igual a 1,58 para a maioria das aplicações normais.

$$P_n = \frac{F_n}{S}$$

IT Per determinare la pressione di caricamento necessaria per ottenere una forza (Fn) diversa dalla nominale (Fo) è sufficiente dividere la forza richiesta (Fn) per l'area di tenuta, stelo o pistone, della guarnizione.

EN To determine the pressure level required to achieve a force (Fn) different from the nominal one (Fo), divide the required force (Fn) by the area of sealing, rod or piston, of the gasket seal.

DE Zur Berechnung des benötigten Befülldruckes (Pn) für eine spezifische Anfangskraft (Fn), die von der im Katalog angegebenen Anfangskraft abweicht, muss die gewünschte Anfangskraft (Fn) durch die von der Dichtung abgedichteten Fläche an der Kolbenstange oder Kolben dividiert werden.

FR Pour calculer la pression de chargement nécessaire pour obtenir une force (Fn) différente de la force nominale (Fo) il suffit de diviser la force requise (Fn) par la surface d'étanchéité (tige ou piston) du joint.

ES Para calcular la presión de carga necesaria a fin de obtener una fuerza (Fn) distinta de la nominal (Fo), se divide la fuerza pedida (Fn) por el área de estanqueidad, vástago o pistón, de la guarnición.

PT Para determinar a pressão de carga necessária para obter uma força (Fn) diferente da nominal (Fo), basta dividir a força necessária (Fn) pela área de estanquidade do embolo/pistão, da guarnição.

USER INFORMATION

Max Speed

IT Non superare la velocità massima dello stelo indicata. Velocità superiori possono ridurre la durata dei cilindri.

EN Do not exceed the maximum rod speed indicated. Exceeding speeds can reduce the cylinder's life.

DE Die angegebene max. Geschwindigkeit der Kolbenstange darf nicht überschritten werden. Höhere Geschwindigkeiten können die Lebensdauer der Gasdruckfedern reduzieren.

FR Ne pas excéder la vitesse maximale de la tige indiquée pour chaque modèle. Vitesses supérieures a peuvent réduire la durée des vérins.

ES No exceder la velocidad máxima del vástago indicada para cada modelo. Velodicades mas altas pueden reducir la duracion del cilindro.

PT Não exceda a velocidade máxima da haste indicada para cada modelo. Velocidades mais elevadas podem reduzir a vida útil do cilindro.

SPM Strokes per Minute

IT Per ogni modello è indicato il campo di frequenza massima di utilizzo raccomandata al 100% Cu. Il valore inferiore è riferito alla corsa più lunga, quello superiore alla corsa più breve. Frequenze superiori possono ridurre la durata dei cilindri.

EN The maximum frequency range of use recommended to 100 % Cu is indicated for evey model. The lower value is referred to the longer stroke, the higher value refers to the shorter stroke. Higher frequencies can reduce the cylinder duration.

DE Für jeden Typ ist eine empfohlene max. Hubzahl (SPM) unter Berücksichtigung des max. Hubes (Cu) angegeben. Der kleine Wert bezieht sich auf den größten auswählbaren Hub, während der größere Wert sich auf den kleinsten auswählbaren Hub bezieht. Höhere Hubzahlen reduzieren die Lebensdauer der Gasdruckfedern.

FR Pour chaque modèle, on indique le champ de fréquence maximale d'usage recommandé au 100% de Cu. La valeur inferieure se réfère a la course plus longue, tandis quel la valeur inférieure à la course plus courte. Fréquences supérieures peuvent réduire la durées des vérins.

ES Para cada modelo, se indica el rango frecuencia máxima de de uso recomendada al 100%. El valor inferior indicado es válido para carrera mas lunga, mientras que el valor superior se refiere a carrera mas corta. frecuencias más altas pueden reducir la duración de los cilindros.

PT Para cada modelo se indica o intervalo de frequência máxima do uso recomendada al 100% Cu. O valor mais baixo é relatado para o curso mais longo, o mais elevado para o curso mais corto. frequências mais elevadas podem reduzir a duração dos cilindros.

LIFE WARRANTY

IT Se correttamente installati e in normali condizioni di lavoro, i cilindri ad azoto Special Springs sono garantiti per una durata di ***200.000 metri lineari*** di corsa (o 100.000 metri lineari per la serie HT). Condizioni di lavoro critiche o cause esterne che provochino mal funzionamenti possono ridurre, anche significativamente, la durata. La garanzia è valida per la durata indicata entro ***2 anni*** dalla data di acquisto. Utilizzi difformi dalle prescrizioni e dalle linee guida specificate e fornite con i prodotti o danni meccanici saranno causa di immediata decadenza della garanzia.
Termini legali di garanzia su www.specialsprings.com

EN If correctly installed and under normal working conditions, Special Springs nitrogen cylinders can guarantee a life of ***200.000 linear meters*** of stroke (or 100.000 linear meters for the series HT). Heavy working conditions or external causes that would cause malfunctioning may reduce the life significantly. The warranty is valid for the indicated life within ***2 years*** from the purchase date. Warranty will not be applied to mechanical damages or damages caused by negligence, misuse and noncompliance with the warning and indications contained in the instruction sheet.
Warranty legal terms on www.specialsprings.com

DE Bei korrektem Einbau und unter normalen Betriebsbedingungen, ist für die Special Springs Gasdruckfedern eine Lebensdauer von 200.000 m Gesamthub (oder 100.000 m Gesamthub für die Baureihe HT) gewährleistet. Kritische Betriebsbedingungen oder äußere Einflüsse, die zu Störungen führen, können die Lebensdauer wesentlich verringern. Die Garantie gilt für die angegebene Dauer innerhalb von zwei Jahren ab Kaufdatum. Die Garantie erlischt mit sofortiger Wirkung bei von den Vorschriften und Richtlinien, die zusammen mit den Produkten geliefert werden,abweichendem Einsatz bzw. mechanischer Beschädigung. ***Garantiebedingungen siehe www.specialsprings.com***

FR Si correctement installées et avec des normales conditions d'usage, les ressorts à l'azote Special Spring sont garantis pour une durée de ***200.000 mètres linéaires*** des course (ou 100.000 mètres linéaires pour la série HT). Des conditions de travail critiques ou d'autres cause externes qui provoquent des mal fonctionnements pourraient réduire, même significativement, la durée. La garantie est valable pour la durée indiquée entre ***2 ans*** de la date d'achat. Des utilisations différentes des prescriptions des lignes-guide spécifiées et fournies avec les produits, ou encore des endommagements mécaniques causeront l'immédiate décadence de la garantie. ***Termes juridiques de garantie sur www.specialsprings.com***

ES Con una instalación correcta y en condiciones normales de trabajo, los cilindros resorte de nitrógeno de Special Springs están garantizados para una duración de ***200.000 metros lineales*** de carrera (o 100.000 metros lineares para la serie HT). Condiciones de trabajo críticas o causas externas cheprovoquen funcionamientos incorrectos pueden reducir, incluso de manera significativa, la vida útil. La garantía es válida para la duración indicada, máximo ***2 años*** desde fecha de compra. Usos diferentes a los prescritos y a las líneas guía especificadas y suministradas con el producto o daños mecánicos serán causa inmediata decadencia de la garantía.
Términos legales de garantía en www.specialsprings.com

PT Se correctamente instalados e em condições normais de trabalho, os cilindros de nitrogênio Special Springs podem garantir uma duração de ***200.000 metros lineares*** de curso (o 100.000 metros lineares para a linha HT). Condições criticas ou causas externas que possam causar mau funcionamento de trabalho pode reduzir a duração de uma forma significativa.A garantia é válida durante o período indicado dentro de ***2 anos*** até a data de compra.Ou qualquer uso diferente respeito das prescrições e orientações fornecidas e especificada com os produtos, ou danos mecânicos causaria a decadência garantia imediata. ***Termos legais de garantia em www.specialsprings.com***

USER INFORMATION

IT TUTTI i cilindri ad azoto SPECIAL SPRINGS soddisfano i requisiti previsti dalla Direttiva Europea sulle attrezzature a pressione 2014/68/EU, che si applica nell'Unione Europea dal 19 Luglio 2016.
Questa Direttiva regolamenta e definisce come attrezzature a pressione i recipienti, le tubazioni e gli accessori sottoposti a una pressione massima ammissibile PS superiore a 0,5 bar.
Più specificatamente, la Direttiva 2014/68/EU prevede la classificazione in categorie e l'obbligo di marcatura CE con il numero identificativo del produttore per le attrezzature il cui risultato della pressione P (bar) x il volume del fluido Vo (dm3) sia pari o superiore a 50. La marcatura CE è obbligatoria per le Categorie II e III, ma facoltativa per la Categoria I.
Per tutti i cilindri a gas il cui prodotto P x Vo è inferiore a 50 si applica l'Articolo 4.3 della Direttiva e non sono marcati CE.

EN ALL Special Springs nitrogen cylinders fulfill the requirements of the European directive concerning pressure equipment (2014/68/EU), applied in the European Union from 19th July 2016.
This directive sets out the standards for pressure equipment and defines them as vessels, piping and accessories subject to a maximum allowable pressure PS greater than 0,5 bar.
In particular, according to the directive 2014/68/EU, pressure equipments are classified by category and they shall bear the CE marking with the identification number of the manufacturer when the result of pressure P(bar) X fluid volume Vo(dm³) is 50 or more. The CE marking is mandatory for Categories II and III, but discretionary for Category I.
All gas cylinders which result of P x Vo is less than 50 are subject to Article 4.3 of the same directive and they do not bear the CE marking.

DE Alle Stickstoff-Gasdruckfedern von Special Springs erfüllen die Forderungen der ab dem 19. Juli 2016 in der Europäischen Union anzuwendenden Richtlinie 2014/68/EU über die Druckgeräte. Diese Richtlinie legt die Anforderungen an die Druckgeräte fest und definiert diese als Behälter, Rohrleitungen und Ausrüstungsteile mit einem max. zulässigen inneren Überdruck (PS) von mehr als 0,5 bar.
Im Einzelnen werden Druckgeräte gemäß der Richtlinie 2014/68/EU in Kategorien eingestuft und müssen mit der CE-Kennzeichnung und der Identifikationsnummer des Herstellers beschriftet werden, wenn der errechnete Wert des Produktes von Druck (P) multipliziert mit dem Befüllungsvolumen Vo (dm3) größer als 50 ist. Die CE-Kennzeichnung ist für die Kategorien II und III zwingend, jedoch nicht für die Kategorie I. Die Gasdruckfedern, bei denen der errechnete Wert des Produktes von Druck (P) multipliziert mit dem Befüllungsvolumen Vo (dm3) kleiner als 50 ist, tragen gemäß dem Artikel 4.3 der genannten Richtlinie keine CE-Kennzeichnung.

CE

PED
2014/68/EU

FR TOUS les cylindres-ressorts à l'azote de SPECIAL SPRINGS satisfont aux prescriptions de la Directive Européenne sur les équipements sous pression 2014/68/EU, qui s'applique dans l'Union Européenne à partir du 19 juillet 2016.
Cette Directive fixe les exigences envers les équipements sous pression et les définit comme les récipients, les tuyauteries et les accessoires soumis à une pression maximale admissible PS supérieure à 0,5 bar.
Plus spécifiquement, la Directive 2014/68/EU prévoit la classification en catégories et l'obligation du marquage CE avec le numéro d'identification du fabricant pour les équipements dont le résultat de la pression P (bar) X le volume du fluide Vo (dm³) est de 50 ou plus. Le marquage CE est obligatoire pour les catégories II et III, mais facultatif pour la catégorie I.
Tous les cylindres-ressorts à l'azote dont le produit de P X Vo est moins de 50 sont réglementés par l'article 4.3 de la même directive et ne portent pas le marquage CE.

ES TODOS los cilindros de nitrógeno SPECIAL SPRINGS cumplen con los requerimientos de la Directiva Europea sobre los equipos a presión 2014/68/EU, que se aplica en toda la Unión Europea a partir del 19 de julio de 2016.
Esta Directiva reglamenta y define como equipos a presión los recipientes, las tuberías y los accesorios sometidos a una presión máxima admisible PS superior a 0,5 bar.
Más concretamente, la directiva 2014/68/EU prevé la clasificación en categorías y la obligación del marcado CE con el número identificativo del fabricante para los equipos cuyo resultado de la presión P (bar) x el volumen del fluido Vo (dm³) seja de 50 o más. El marcado CE es obligatorio para las categorías II y III, pero facultativa para la categoría I.
Todos los cilindros de nitrógeno cuyo resultado P x V es menor de 50 están sujetos al artículo 4.3 de la directiva y no llevan el marcado CE.

PT TODOS os cilindros de nitrogénio Special Springs satisfazem os requisitos da Diretiva Europeia para equipamentos sob pressão 2014/68/EU, que se aplica na União Europeia a partir de 19 de julho de 2016.
Esa Diretiva regulamenta os equipamentos sob pressão e os define como os recipientes, os tubagens e os acessórios sujeitos a uma pressão máxima admissível PS superior a 0,5 bar.
Em particular, a directiva 2014/68/EU prevê a classificação em categorias e a obrigação da marcação CE com o número de identificação do fabricante para os equipamentos cujo o resultado de pressão P (bar) X volume fluido Vo(dm³) é igual ou superior a 50. A marcação CE è obrigatória para as categorias II e III, mas discricionária para a categoria I.
Todos os cilindros de nitrogénio, através da qual resultam P x Vo é inferior a 50 estão sujeitos ao artigo 4.3 da mesma directiva e não ostentam a marcação CE.

USER INFORMATION

IT Qualora, dopo un lungo funzionamento o per applicazioni particolarmente gravose, si verificassero delle perdite di pressione, significa che le tenute hanno iniziato ad usurarsi o sono state danneggiate. E' quindi possibile, con l' uso di appositi utensili e kits ed il supporto di specifici video e dettagliate istruzioni, ripristinare le condizioni originarie di tenuta e guida. Solo personale qualificato dovrebbe eseguire la manutenzione. Eventuali errori possono essere causa di gravi rischi per la sicurezza o limitare la durata dei cilindri. Prima di eseguire qualsiasi intervento scaricare completamente la pressione e assicurare che lo stelo sia completamente compresso nel corpo.

EN If pressure losses occur after extended use or particularly heavy applications, this indicates that the sealing gaskets are worn or damaged. Using special tools and kits, and with the support of videos and detailed instructions, it is possible to restore the original seal and guide conditions. Maintenance must only be conducted by qualified personnel. Errors would cause serious injury or reduce the working life of the cylinders. Before carrying out any work on the system,fully exhaust all pressure and ensure that the rod is fully retracted into the body.

DE Wird nach langer Betriebstätigkeit oder besonders beanspruchender Verwendung ein Druckverlust festgestellt, bedeutet dies, dass die Dichtungen allmählich abgenutzt sind oder beschädigt wurden. Es ist mit Hilfe von zweckmäßigem Werkzeug oder Sets sowie spezifischen Videos und detaillierten Anweisungen möglich, die Ausgangsbedingungen von Dichtung und Führung wiederherzustellen. Die Wartung sollte nur von qualifiziertem Personal vorgenommen werden. Etwaige Fehler können schwerwiegende Sicherheitsrisiken hervorrufen oder die Lebensdauer der Zylinder einschränken. Entladen Sie den Druck und stellen Sie sicher, dass der Schaft komplett in den Körper eingeführt ist, bevor Sie Eingriffe vornehmen.

FR Si des pertes de pression se produisent après un long fonctionnement ou avec des applications particulièrement lourdes, cela signifie que les joints de rétenue ont commencé à s'usurer ou qu'ils sont endommagés. L'utilisation d'outils et de kits appropriés, ainsi que le support de vidéos spécifiques et d'instructions détaillées permettront de rétablir les conditions d'origine de rétenue et de guidage. La maintenance doit être effectuée uniquement par du personnel qualifié. Les éventuelles erreurs peuvent engendrer de graves risques pour la sécurité ou limiter la durée de vie des cylindres. Avant d'effectuer toute opération, décharger complètement la pression et s'assurer que la tige soit complètement comprimée dans le corps.

ES Si, después de mucho tiempo funcionando, o en caso de aplicaciones muy pesadas, se produjesen pérdidas de presión, significa que las guarniciones han comenzado a desgastarse o han sufrido algún desperfecto. En esos casos es perfectamente posible restablecer las condiciones originales de la guarnición o la guía mediante kits de herramientas especiales y vídeos de instrucciones específicas. El mantenimiento debe ser efectuado única y exclusivamente por personal cualificado. Cualquier error podría causar graves riesgos de seguridad o limitar la vida útil de los cilindros. Antes de cualquier reparación, descargar completamente la presión y asegurarse de que el vástago quede completamente.

PT No caso em que, após um longo funcionamento ou por aplicações particularmente gravosas, se verifiquem perdas de pressão, isso significa que os vedantes começaram a desgastar-se ou foram danificadas. Portanto, com a utilização dos utensílios e dos conjuntos, com o apoio de vídeos específicos e de instruções detalhadas é possível restabelecer as condições originais de estanquidade e guidamento. A manutenção só deve ser executada por pessoal qualificado. Erros eventuais podem ser a causa de riscos graves para a segurança ou limitar a duração dos cilindros. Antes de executar qualquer intervenção, descarregar completamente a pressão e assegurar-se de que o embolo recolhido.

Download step-by-step guide instructions at: http://www.specialsprings.com

PED 2014/68/EU

CE

IT Come previsto dalle linee guida della direttiva PED 2014/68/EU l'azienda che provvede alla manutenzione dei cilindri marchiati CE dal fabbricante (P x Vo =/> 50) si assume la completa responsabilità di far riesaminare gli stessi da un ente di certificazione accreditato. Diversamente tali manutenzioni potranno essere effettuate esclusivamente da Special Springs.

EN As prescribed by the guidelines of PED 2014/68/EU, the company taking care of the maintenance for cylinders laser marked CE by the producer (P x Vo =/> 50), must get them checked by a certified body. Otherwise, the maintenance can be carried out exclusively by Special Springs.

DE Wie in der Richtlinie PED 2014/68/EU vorgeschrieben übernimmt die Firma, die die Instandhaltung von Gasdruckfedern durchführt, die vom Hersteller mit CE-Kennzeichnung versehen worden sind (P x Vo =/> 50), die volle Verantwortung dafür, diese von einer zugelassenen Zertifizierungsanstalt nachprüfen zu lassen. Andernfalls können diese Instandhaltungsarbeiten ausschließlich von Special Springs durchgeführt werden.

FR Selon le mode prévu par les indicationes de la directive PED 2014/68/EU, l'entreprise qui s'occupe de l'entretien des cilindres marqués CE par le producteur (P x Vo =/> 50), assume la responsabilité de les faire réexaminer par un institut de certificatión qualifié. Autrement, les entretienes peuvent être effectuées exclusivement par Special Springs.

ES Como las indicaciones de la directiva PED 2014/68/EU estipulan, la empresa que provee al mantenimiento de los cilindros grabado CE por el productor (P x Vo =/> 50), se hace cargo de que una empresa certificada y capacitada les controle. De otra manera los mantenimientos pueden ser llevado exclusivamente por Special Springs.

PT De acordo com as directrizes PED 2014/68/EU a fabrica que fornece a manutenção dos cilindros com a marca CE do fabricante (P x Vo =/> 50) assume a responsabilidade de reexaminar os mesmos por uma entidade de certificação creditada. De outra forma tais manutenções poderão ser efectuadas exclusivamente pela Special Springs.

How to Order

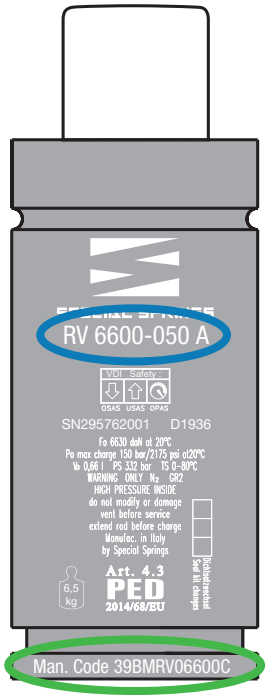

Maintenance kits

IT Se il codice Man. Code non è riportato sul cilindro: 39BM + Codice cilindro completo.

EN If Man. Code is not indicated on the cylinder, order: 39BM + complete Part Number.

DE Wenn Man. Code auf der Gasdruckfeder nicht vorhanden, bestellen Sie 39BM + vollständige Artikelnummer.

FR Si le Man. Code n'est pas indiqué en le cylindre, ordonnez 39BM + Numéro d'Article complet.

ES Si el Man. Codigo no està indicado en el cilindro, ordenar 39BM + Código completo del Producto.

PT Se a referencia Man Code não estiver escrita no cilindro, favor solicitar 39BM + Código do Produto completo.

EXAMPLE: 39BMRV6600-050 A

IT Se presente nel cilindro, riportare il codice Man. Code in fase di ordinazione.

EN If Man. Code is indicated on the cylinder, specify it on the order.

DE Wenn Man. Code auf der Gasdruckfeder vorhanden, bitte in der Bestellung angeben.

FR Si le Man. Code est indiqué en le cylindre, précisez-le dans l'ordre.

ES Si el Man. Code està indicado en el cilindro, especificarlo en el orden.

PT Se indicado no cilindro, indique o Man. Code na ordem.

EXAMPLE: 39BMRV06600C

IT Kit include: Boccola assemblata, Valvola unidirezionale, lubrificante e grasso, Istruzioni di montaggio.

EN Kit contains: Assembled bushing, one way valve, lubricant and grease, instructions sheet.

DE Das Set beinhaltet: montierte Buchse, Rückschlagventil, Schmieröl und Schmierfett, Montageanleitung.

FR Le kit comprend: Douille assemblée, Soupape à sens unique, lubrifiante et graisse, Instructions pour le montage.

ES El Kit contiene: casquillo ensamblado, Válvula unidireccional, lubricante y grasa, Instrucciones de montaje.

PT O Kit contém: Bucha ensamblada, Válvula unidirecional, lubrificante e graxa, Instruções de montagem.

IT Per una maggiore sicurezza di utilizzo, consegnare sempre i fogli di istruzioni e uso allegati ai cilindri e agli accessori Special Springs insieme alle attrezzature.

EN For a safer use, always provide all tools together with the instruction sheets included with Special Springs cylinders and accessories.

DE Für eine sicherere Verwendung, bitte liefern Sie immer zusammen mit dem Werkzeug die Betriebsanleitung, die den Gasdruckfedern und Zubehörteile von Special Springs beiliegt, mit.

FR Pour une majeure sécurité d'utilisation, veuillez fournir toujours avec les outils la fiche d'instructions livrée avec les ressorts gaz et les accessoires de Special Springs.

ES Para una utilización más segura, por favor entregue siempre todas las herramientas con la hoja de instrucciones suministrada con los cilindros de nitrogeno y los accesorios de Special Springs.

PT Para uma utilização mais segura, por favor entregue sempre todas as ferramentas com a folha de instruções fornecida com os cilindros e os acessórios de Special Springs.

BENEFITS VS 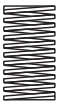

	BENEFITS	RESULT
Less Space 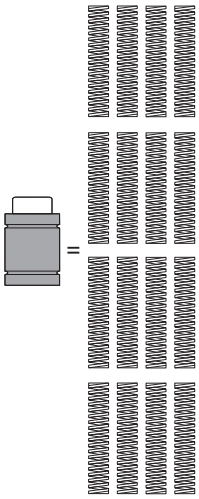	Notevole riduzione della superficie, dello spazio in altezza e del volume occupato. Eliminazione dispositivi di precarico e guidaggio. Considerable reduction of the required surface, height and volume. No need for retaining and pre-load devices. Deutliche Reduzierung des Platzbedarfs. Vorrichtungen zum Vorspannen und Führen werden nicht benötigt. Réduction importante de la surface, de la hauteur et du volume occupés. Élimination de dispositifs de pré-charge et guidage. Notable reducción de la superficie, de la altura y del volumen ocupados. Eliminación de dispositivos de precarga y guía. Redução notável da superfície, da altura e do volume ocupados. Eliminação de dispositivos de pré-carga e guidamento.	
Lower Height 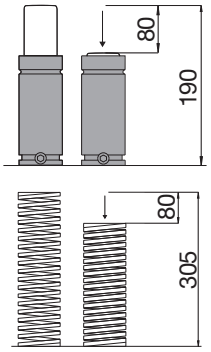	Notevole riduzione degli ingombri in altezza a parità di forza e corsa. Costruzione dello stampo più compatta. Considerable height reduction for the same working deflection and force. Compact tool construction. Wesentliche Reduzierung des Höhenbedarfs bei gleichem Hub und gleicher Kraft. Kompaktere Werkzeugkonstruktion. Réduction importante des encombrements en hauteur avec une course et une force équivalente. Construction plus compacte du moule. Notable reducción de la altura con igual fuerza y carrera. Construcción más compacta del molde. Redução notável em altura com igual força e corsu. Costrução mais compacta da Ferramenta.	**Save Money** 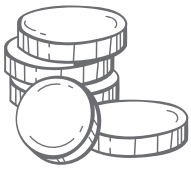
Controlled Force 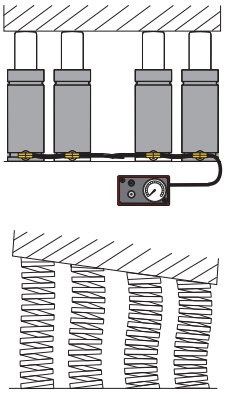	Forza bilanciata e posizionata dove richiesto. Visualizzazione continua della pressione e costante qualità dei pezzi stampati. Maggiore durata degli utensili. The force is balanced and positioned where required. Pressure is always visible and quality of molded parts is constant. Longer life for tools. Die Kraft ist stets ausgeglichen und positionierbar an den erforderlichen Stellen. Ständige Anzeige des Betriebsdrucks und konstante Qualität der zu fertigenden Teile. Längere Lebensdauer der Werkzeuge. La force est équilibrée et positionnée là où elle est exigée. Visualisation continue de la pression et qualité constante des pièces moulées. Durée de vie majeure des outils. Fuerza equilibrada y posicionable donde se precisa. Visualización continua de la presión y calidad constante de las piezas moldeadas. Mayor duración de las herramientas. Força equilibrada e posicionáve onde é necessária. Visualização contínua da pressão e constante qualidade das peças estampadas. Maior duração das ferramentas.	

	BENEFITS	RESULT
Large initial Force 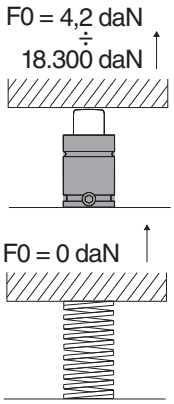	Nessun precarico e maggiore facilità di applicazione. No pre-loading needed. Easier and quicker fitting. Einfacher Einbau, da externe Vorspannung nicht benötigt wird. Elimination de la pré-charge et application plus facile. Eliminación de la precarga y mayor facilidad de aplicación. Eliminação da pré-carga e maior facilidade de aplicação.	
Almost Steady Force 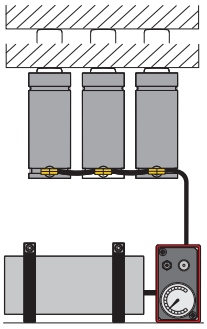	Migliore controllo e riduzione dell'incremento della forza. Migliore qualità dei pezzi stampati e minori scarti di produzione. Better control and reduction of force increase. Better quality of molded parts and lower rejection rate in production. Bessere Kontrolle und Reduzierung der Krafterhöhung. Bessere Qualität der fertigen Werkstücke und weniger Ausschuss bei der Produktion. Meilleur contrôle et réduction de l'augmentation de la force. Une meilleure qualité des pièces moulées et une quantité inférieure de pièces rejetées en production. Mejor control y reducción del aumento de la fuerza. Mejor calidad de las piezas moldeadas y menos piezas rechazadas en producción. Melhor controlo e redução do incremento da força. Melhor qualidade das peças estampadas e menos peças rejeitadas na produção.	**Save Money** 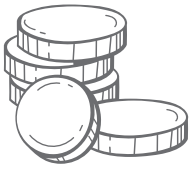
Adjustable Force 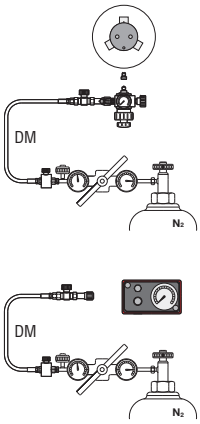	Forze regolabili e flessibilità d'uso. Adjustable forces and flexible use. Einstellbare Kräfte und flexibler Einsatz. Forces réglables et flexibilité d'utilisation. Fuerzas regulables y flexibilidad de utilización. Forças reguláveis e flexibilidade de utilização.	

HOW TO READ THE CATALOG

SAMPLE PAGE

1 2 3 4 5 6 7 8 9 10 11 12 13 14 15 16 17 18 19 20

SC 150

ISO 11901 - 1	VDI 3003	075.90.55 (FCA)	B2 4006 (BMW)
B8 3180 220 000 001(MB)	E24.54.815.G (PSA)	EM24.54.700 (Renault)	39D 878 (VW)

SW

OSAS + OSM = OVER STROKE ACTIVE SAFETY + OVER STROKE MARKER

ACTIVE SAFETY

easy MANIFOLD p. 241

OSAS

USAS

OPAS

* $F1_i$ = Isothermal end force at 100% Cu p. 18

** $F1_p$ = Polytrophic end force at 100% Cu

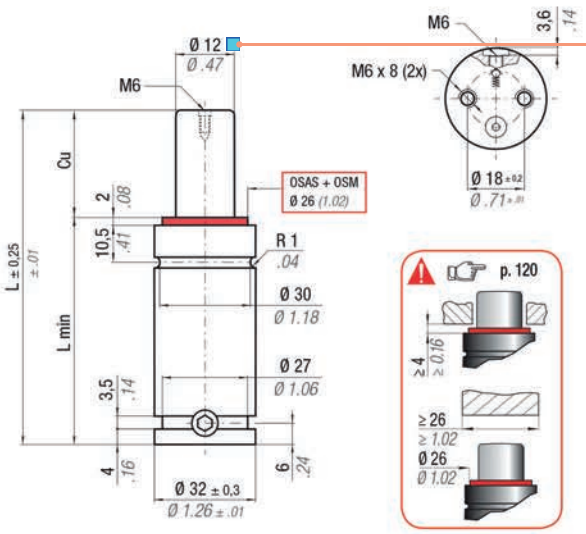

N2	°F 32 - 176 / °C 0 - 80	ΔP	P max	P min	S	SPM	Max Speed	Maintenance kit
		± 0,33 %/°C	150 bar 2175 psi	20 bar 290 psi	1,13 cm² 0.175 in²	~ 80 - 100 (at 20°C)	1,8 m/s	39BMSC00150E

CODE	Cu mm	Cu inch	L mm	L inch	L min mm	L min inch	F0 Initial force daN	F0 lb	$F1_i$ * End force daN	$F1_i$ lb	$F1_p$ ** End force daN	$F1_p$ lb	V0 cm³	V0 in³	~Kg	~lb	PED 2014/68/EU
SC 150 - 010 - D	10	0.39	70	2.76	60	2.36	170 ± 5% 150 bar 2175 psi + 20 °C +68 °F	382	191	429	207	466	12,0	0.73	0,28	0.62	✓
SC 150 - 013 - D	12,7	0.51	75,4	2.97	62,7	2.47			194	435	212	476	14,0	0.85	0,29	0.64	✓
SC 150 - 016 - D	16	0.63	82	3.23	66	2.60			197	442	216	486	16,0	0.98	0,30	0.66	✓
SC 150 - 025 - D	25	0.98	100	3.94	75	2.95			202	455	224	504	21,0	1.28	0,33	0.73	✓
SC 150 - 038 - D	38	1.50	126	4.96	88	3.46			207	465	231	519	28,0	1.71	0,36	0.79	✓
SC 150 - 050 - D	50	1.97	150	5.91	100	3.94			209	471	235	528	35,0	2.14	0,40	0.88	✓
SC 150 - 063 - D	63,5	2.48	177	6.97	113,5	4.47			211	475	238	535	43,0	2.62	0,44	0.97	✓
SC 150 - 080 - D	80	3.15	210	8.27	130	5.12			213	479	240	540	52,0	3.17	0,49	1.08	✓
SC 150 - 100 - D	100	3.94	250	9.84	150	5.91			214	482	242	545	63,0	3.84	0,55	1.21	✓
SC 150 - 125 - D	125	4.92	300	11.81	175	6.89			216	485	244	549	78,0	4.76	0,64	1.41	✓

Drop-in | Bottom mount | FS2A 32 FS2B 32 | FC 32 A FCQC 32 | FSA 32 FSD 32

HOW TO ORDER p. 121

INSTALLATION GUIDELINE p. 203

HOW TO READ THE CATALOG

1	Modello di cilindro ad azoto Gas spring model Gasdruckfeder Modell Modèle de Ressorts Gaz Modelo de cilindro de nitrógeno Modelo de cilindro de nitrogênio	2	Standard internazionali / costruttori auto (ISO, VDI, ecc.) International / Automotive Standards (ISO, VDI, ecc.) Internationale / Automobil-Standards (ISO, VDI, ecc.) Standards internationaux / automobiles (ISO, VDI, ecc.) Estándares internacionales / automóvil (ISO, VDI, ecc.) Padrões internacionais / automóvel (ISO, VDI, ecc.)
3	Modifica rispetto al catalogo precedente > see page 2 Modification respect to the former catalog >see page 2 Modification restet au catalogue précédent > voir page 2 Veränderungen gegenüber den alte Katalog > Siehe Seite 2 Cambios en comparación con el catálogo anterior > ver página 2 Alterações em comparação com o catálogo anterior > ver página 2	4	Raschiatore secondario applicabile Secondary Wiper can be mounted Sekundärabstreifer montierbar Joint racleur secondaire peut être monté Rascador secundario montable Raspador secundário montável
5	Dispositivi di sicurezza presenti nel modello Safety devices provided on the model Anwesende Sicherheitseinrichtungen am Modell Dispositifs de sécurités présents sur le modèle Dispositivos de seguridad disponibles en el modelo Dispositivos de segurança disponíveis no modelo	6	Gas di caricamento Pressure medium Druckgas Gaz de chargement Gas de carga Gás de carga
7	Temperatura di esercizio Working temperature Betriebstemperatur Température de fonctionnement Temperatura de funcionamiento Temperatura de funcionamento	8	$\Delta P / \Delta t$
9	Pressione max di caricamento Max charging pressure Maximaler Ladedruck Pression de chargement maximum Presión máx de carga Pressão máxima de carga	10	Pressione min. di caricamento Min charging pressure Minimaler Ladedruck Pression de chargement minimum Presión mín de carga Pressão mínima de carga
11	Area di tenuta stelo/pistone Rod/piston seal area Dichtungsbereich Kolbenstange/Kolben Zone d'étanchéité tige/piston Área de estanqueidad vástago/pistón Área de estanquidade do embolo/pistão	12	Cicli / minuto Strokes / minute Hube / Minute Cycles / minute Cyclos / minuto Pancadas / minuto
		13	Codice Code Bestell-Nummer Référence Código Codigo
14	Forza iniziale a 20°C Initial force at 20°C Ausgangsleistung bei 20°C Force initiale a 20°C Fuerza inicial à 20°C Força inicial a 20°C	15	Forza finale isotermica Isothermal end force Isothermische Endfestigkeit Force finale isothermique fuerza finale isotérmica força final isotérmica
16	Forza finale politropica Polytropic end force polytropische Endfestigkeit force finale politrophique fuerza finale politrópica força finale politrópica	17	Volume iniziale Initial gas volume Ausgangswert Gasvolumen Volumen inicial de gas Volume de gaz initial Volume de gás inicial
18	Classificazione PED PED classification PED Einstufung Classification PED Clasificación PED Classificação PED	19	Fissaggi Flange mounts Befestigungen Brides de fixation Bridas Fixação com flange
		20	Indice di revisione pagina Page review index Index der Seiteüberprufung Index de revue de page Índice de revisión de página Índice de revisão de página

Tutte le dimensioni senza tolleranza si intendono nominali.
All dimensions are nominal unless tolerance is stated.
Alle Massgangen ohne Toleranzen sind Nennmasse.

Sauf specifications de tolerances, totes le dimensions sont des valeurs nominales.
Todas las dimensiones son nominales excepto cuando se indica la tolerancia.
Todas as medidas são nominalis excepto quando la tolerancia é mencionada.

SELECTION TAB

Ø \ Fo	42 50	70 90	150 200	260 320	360 480	490 680	740 780	900 1000	1060 1410	1530 2000
12	M 50									
15		M 70								
M 16 x 1,5	NG 16 x 1,5 NE 16 x 1,5									
M 16 x 2	NE 16 x 2									
19		M 90 MS 90	■ MP 150 RV 170 RS 170							
M 24 x 1,5		M 90 TBM M 90 TEM	NG 24 x 1,5 NE 24 X 1,5							
1"- 8 THD		M 90 TBI								
25			M 200 MS 200	■ MP 300 ML 300 RV 320 RS 320	KE 400					
32			SC 150	M 300 H 300	RV 350 RS 350 RT 350	ML 500 ■ MP 500 ■ MQ 700	KE 750			
38				SC 250	H 500 ■ HT 500 T2 RV 500 RS 500 RT 500	■ HT 500 T1		ML 1000 ■ MP 1000	KE 1000	
M 38 x 1,5				SCF 250	HF 500					
45					S 500 SC 500	H 700	■ HT 700 T1 ■ HT 700 T2 RV 750 RS 750 RF 750 RT 750 RG 750			
50							SC 750 S 750	H 1000 ■ HT 1000 T1 ■ HT 1000 T2 RV 1000 RS 1000 RF 1000 RT 1000 RG 1000	RV 1200 RS 1200 RF 1200 RT 1200	KE 1800 ML 1800 ■ MP 2000
63										RV 1500 RS 1500 RF 1500 RT 1500 RG 1500 ■ H 1500
75										S 1500 SC 1500 LS 1500

SELECTION TAB

Ø \ F_0	2035 2385	2830 3000	3180	4240	4418 4980	6630	7540 7700	9540	10600 12720	18400 19910
63		KE 3000 MP 3000	ML 3000							
75	H 2400 LS 2400 RV 2400 RS 2400 RF 2400 RT 2400 RG 2400				KE 4700 ML 4700					
95		LS 3000 S 3000 SC 3000		H 4200 LS 4200 RV 4200 RS 4200 RT 4200 RG 4200			KE 7500 ML 7500			
120					LS 5000 SC 5000	H 6600 LS 6600 RV 6600 RS 6600 RT 6600 RG 6600			KE 12000 ML 12000	
150							SC 7500 LS 7500	H 9500 LS 9500 RV 9500 RS 9500 RT 9500	RV 12000	KE 18500
195									SC 10000	RV 20000 H 18500

NE SERIES

VDI	BMW	Ford
VW		

NG SERIES

VDI	GM	FCA

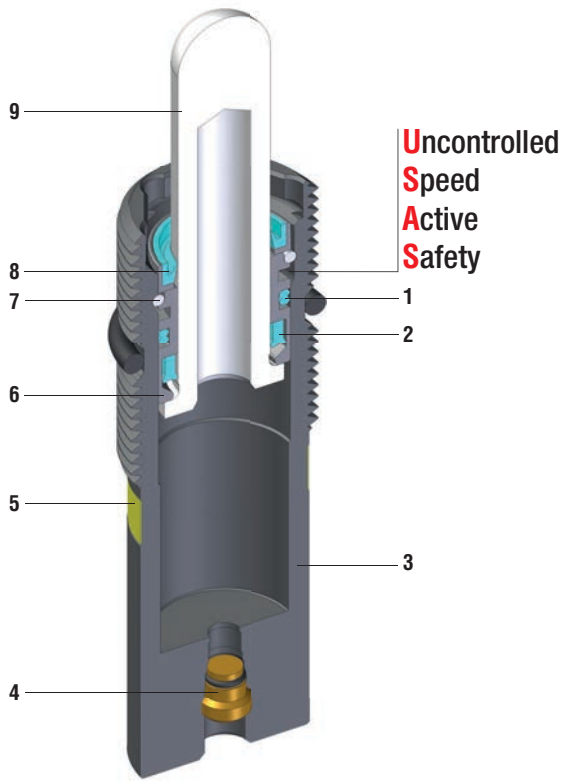

Cu 10 ÷ 50

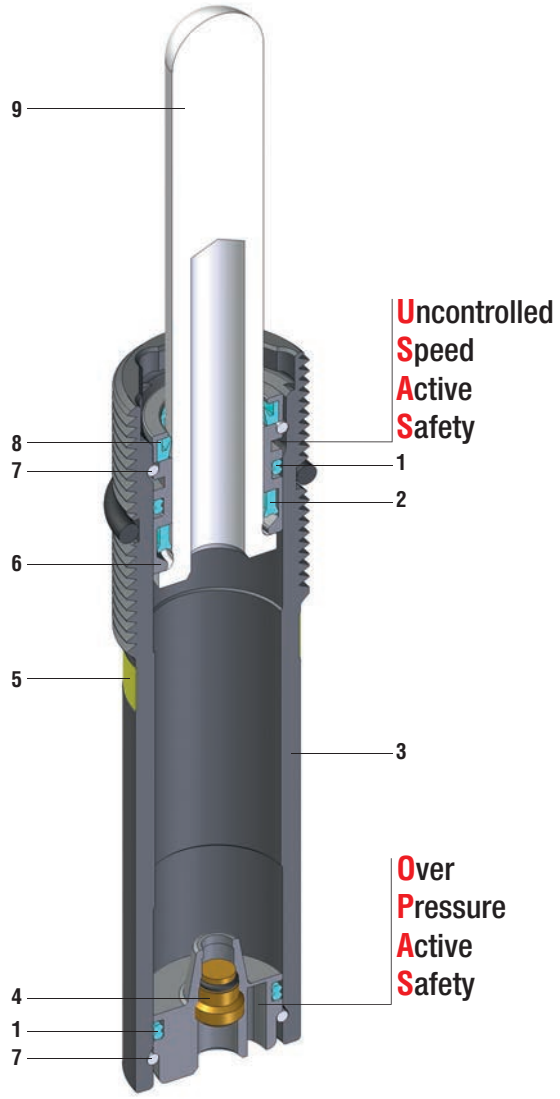

Cu 60 ÷ 125

Espulsori a gas - Gas ejectors - Federnde Druckstücke
Èjecteurs de gaz - Eyectores de gas - Ejectores a gás

SEALING	ROD SEAL
DESIGN	BUSH - BODY DESIGN

1	Dual ring seal	**6**	Bush
2	Rod seal	**7**	Retaining ring
3	Body	**8**	Rod wiper
4	Valve	**9**	Rod (nitrited superfinished)
5	Force color code		

RANGE CHART

Model	Body Ø		Stroke Cu		Initial force F0		OSAS	USAS	OPAS	SKUDO
	mm	*inch*	mm	*inch*	daN	*lb*				
NE 16 x 1,5	M 16 x 1,5	*M 16 x 1.5*	10 - 125	*0.39 - 4.92*	3 - 42	*7 - 95*	-	✓	-	-
NE 16 x 2	M 16 x 2	*M 16 x 2*	10 - 125	*0.39 - 4.92*	3 - 42	*7 - 95*	-	✓	-	-
NG 16 x 1,5	M 16 x 1,5	*M 16 x 1.5*	10 - 100	*0.39 - 3.94*	3 - 42	*7 - 95*	-	✓	-	-
NE 24 x 1,5	M 24 x 1,5	*M 24 x 1.5*	10 - 50	*0.39 - 1.97*	11 - 170	*25 - 382*	-	✓	-	-
NE 24 x 1,5	M 24 x 1,5	*M 24 x 1.5*	60 - 125	*2.36 - 4.92*	11 - 170	*25 - 382*	-	✓	✓	-
NG 24 x 1,5	M 24 x 1,5	*M 24 x 1.5*	10 - 50	*0.39 - 1.97*	11 - 170	*25 - 382*	-	✓	-	-
NG 24 x 1,5	M 24 x 1,5	*M 24 x 1.5*	60 - 100	*2.36 - 3.94*	11 - 170	*25 - 382*	-	✓	✓	-

HOW TO ORDER

Series

Revision code

Model

NE16x1.5-050-B-YW

Stroke

Force color code

Available versions

NE 16x1.5-050-B-YW

Standard code

Self contained

NE 16 x 1.5

VDI 3004	W-DX35-60M (Ford)	39D 549 (VW)	

SPECIAL SPRINGS

ACTIVE SAFETY

USAS

*** $F1_i$ =**
Isothermal end force at 100% Cu p. 18

**** $F1_p$ =**
Polytrophic end force at 100% Cu

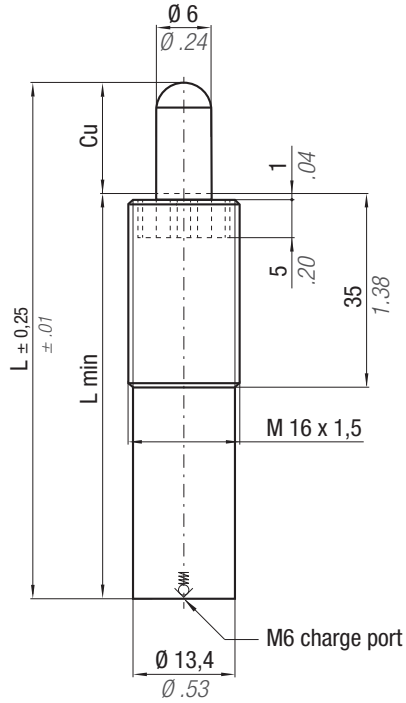

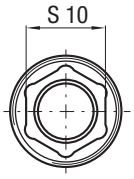

cod. 39CM01A
(optional)

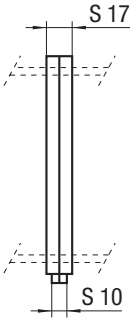

N2	°F 32 - 176	°C 0 - 80	ΔP	P max	P min	S	SPM	Max Speed	Maintenance kit
			± 0,33 %/°C	150 bar *2175 psi*	10 bar *145 psi*	0,28 cm² *0.043 in²*	~ 50 - 100 (at 20°C)	1,8 m/s	Disposable

CODE	Cu mm	Cu *inch*	L mm	L *inch*	L min mm	L min *inch*	~Kg	*~lb*	PED 2014/68/EU
NE 16 x 1,5-010-B-...	10	*0.39*	65	*2.56*	55	*2.17*	0,05	*0.11*	✓
NE 16 x 1,5-020-B-...	20	*0.79*	85	*3.35*	65	*2.56*	0,06	*0.13*	✓
NE 16 x 1,5-030-B-...	30	*1.18*	105	*4.13*	75	*2.95*	0,07	*0.15*	✓
NE 16 x 1,5-040-B-...	40	*1.57*	125	*4.92*	85	*3.35*	0,07	*0.15*	✓
NE 16 x 1,5-050-B-...	50	*1.97*	145	*5.71*	95	*3.74*	0,08	*0.18*	✓
NE 16 x 1,5-060-B-...	60	*2.36*	165	*6.50*	105	*4.13*	0,08	*0.18*	✓
NE 16 x 1,5-070-B-...	70	*2.76*	185	*7.28*	115	*4.53*	0,09	*0.20*	✓
NE 16 x 1,5-080-B-...	80	*3.15*	205	*8.07*	125	*4.92*	0,10	*0.22*	✓
NE 16 x 1,5-100-B-...	100	*3.94*	245	*9.65*	145	*5.71*	0,11	*0.24*	✓
NE 16 x 1,5-125-B-...	125	*4.92*	295	*11.61*	170	*6.69*	0,12	*0.26*	✓

Force color code	P bar	P *psi*	F0 Initial force ± 5% +20°C daN	F0 *+68°F lb*	$F1_i$ End force*	$F1_p$ End force**
PR	12	*174*	4	*9*	1,56 x F0	2,03 x F0
GR	20	*290*	6	*14*	1,56 x F0	2,03 x F0
BU	40	*580*	11	*25*	1,56 x F0	2,03 x F0
RD	75	*1088*	21	*47*	1,56 x F0	2,03 x F0
YW	150	*2175*	42	*95*	1,56 x F0	2,03 x F0
BK	10-150	*145-2175*	3-42	*7-95*	1,56 x F0	2,03 x F0

P = nominal charging pressure

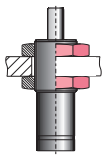

DM 16

HOW TO ORDER
p. 31

INSTALLATION GUIDELINE
p. 203

NE 16 x 2

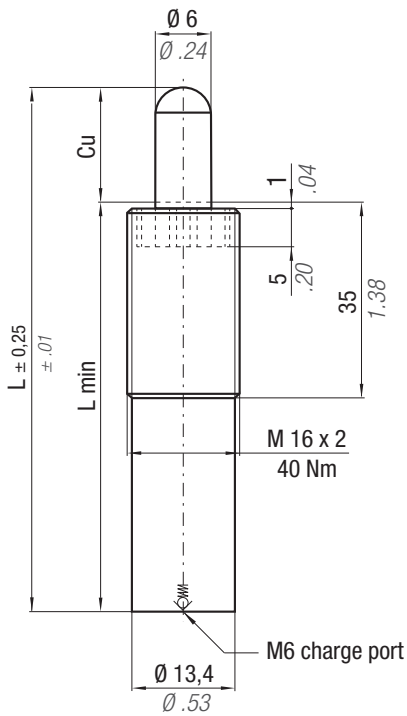

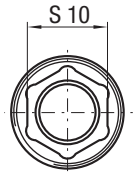

cod. 39CM01A
(optional)

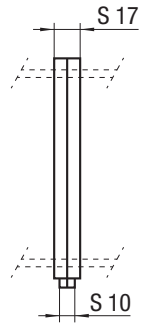

*** $F1_i$ =**
Isothermal end force at 100% Cu p. 18

**** $F1_p$ =**
Polytrophic end force at 100% Cu

ACTIVE SAFETY

NE
NG

USAS

N2	°F 32 - 176 / °C 0 - 80	ΔP	P max	P min	S	SPM	Max Speed	Maintenance kit
		± 0,33 %/°C	150 bar / *2175 psi*	10 bar / *145 psi*	0,28 cm² / *0.043 in²*	~ 50 - 100 (at 20°C)	1,8 m/s	Disposable

CODE	Cu mm	Cu *inch*	L mm	L *inch*	L min mm	L min *inch*	~Kg	*~lb*	PED 2014/68/EU
NE 16 x 2-010-B-...	10	*0.39*	65	*2.56*	55	*2.17*	0,05	*0.11*	✓
NE 16 x 2-020-B-...	20	*0.79*	85	*3.35*	65	*2.56*	0,06	*0.13*	✓
NE 16 x 2-030-B-...	30	*1.18*	105	*4.13*	75	*2.95*	0,07	*0.15*	✓
NE 16 x 2-040-B-...	40	*1.57*	125	*4.92*	85	*3.35*	0,07	*0.15*	✓
NE 16 x 2-050-B-...	50	*1.97*	145	*5.71*	95	*3.74*	0,08	*0.18*	✓
NE 16 x 2-060-B-...	60	*2.36*	165	*6.50*	105	*4.13*	0,08	*0.18*	✓
NE 16 x 2-070-B-...	70	*2.76*	185	*7.28*	115	*4.53*	0,09	*0.20*	✓
NE 16 x 2-080-B-...	80	*3.15*	205	*8.07*	125	*4.92*	0,10	*0.22*	✓
NE 16 x 2-100-B-...	100	*3.94*	245	*9.65*	145	*5.71*	0,11	*0.24*	✓
NE 16 x 2-125-B-...	125	*4.92*	295	*11.61*	170	*6.69*	0,12	*0.26*	✓

Force color code	P bar	P *psi*	F0 Initial force ± 5% +20°C daN	F0 *+68°F lb*	$F1_i$ End force*	$F1_p$ End force**
PR	12	*174*	4	*9*	1,56 x F0	2,03 x F0
GR	20	*290*	6	*14*	1,56 x F0	2,03 x F0
BU	40	*580*	11	*25*	1,56 x F0	2,03 x F0
RD	75	*1088*	21	*47*	1,56 x F0	2,03 x F0
YW	150	*2175*	42	*95*	1,56 x F0	2,03 x F0
BK	10-150	*145-2175*	3-42	*7-95*	1,56 x F0	2,03 x F0

P = nominal charging pressure

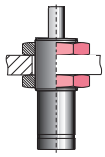

39DM16X2A

HOW TO ORDER
p. 31

INSTALLATION GUIDELINE
p. 203

NE 24 x 1.5

VDI 3004	W-DX35-60M (Ford)	39D 549 (VW)	

SPECIAL SPRINGS

ACTIVE SAFETY

USAS

OPAS

*** $F1_i$ =** Isothermal end force at 100% Cu p. 18

**** $F1_p$ =** Polytrophic end force at 100% Cu

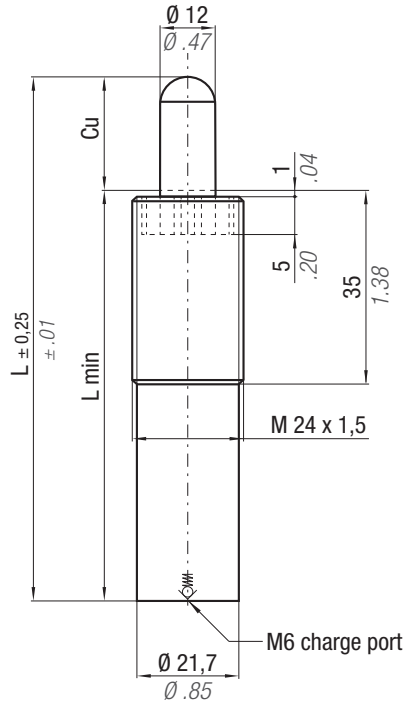

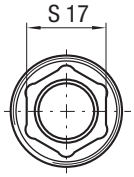

cod. 39CM01A (optional)

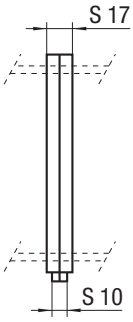

N2	°F 32 - 176	°C 0 - 80	ΔP ± 0,33 %/°C	P max 150 bar / 2175 psi	P min 10 bar / 145 psi	S 1,13 cm² / 0.175 in²	SPM ~ 50 - 100 (at 20°C)	Max Speed 1,8 m/s	Maintenance kit Disposable

CODE	Cu mm	Cu inch	L mm	L inch	L min mm	L min inch	~Kg	~lb	PED 2014/68/EU
NE 24 x 1,5-010-B-...	10	0.39	65	2.56	55	2.17	0,16	0.35	✓
NE 24 x 1,5-020-B-...	20	0.79	85	3.35	65	2.56	0,18	0.40	✓
NE 24 x 1,5-030-B-...	30	1.18	105	4.13	75	2.95	0,20	0.44	✓
NE 24 x 1,5-040-B-...	40	1.57	125	4.92	85	3.35	0,23	0.51	✓
NE 24 x 1,5-050-B-...	50	1.97	145	5.71	95	3.74	0,25	0.55	✓
NE 24 x 1,5-060-B-...	60	2.36	165	6.50	105	4.13	0,27	0.59	✓
NE 24 x 1,5-070-B-...	70	2.76	185	7.28	115	4.53	0,29	0.64	✓
NE 24 x 1,5-080-B-...	80	3.15	205	8.07	125	4.92	0,30	0.66	✓
NE 24 x 1,5-100-B-...	100	3.94	245	9.65	145	5.71	0,33	0.73	✓
NE 24 x 1,5-125-B-...	125	4.92	295	11.61	170	6.69	0,35	0.77	✓

Force color code	P bar	P psi	F0 Initial force ± 5% +20°C daN	F0 +68°F lb	$F1_i$ End force*	$F1_p$ End force**
GR	20	290	23	52	1,85 x F0	2,53 x F0
BU	40	580	45	101	1,85 x F0	2,53 x F0
RD	75	1088	85	191	1,85 x F0	2,53 x F0
YW	150	2175	170	382	1,85 x F0	2,53 x F0
BK	10-150	145-2175	11-170	25-382	1,85 x F0	2,53 x F0

P = nominal charging pressure

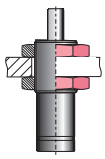

DM 24

HOW TO ORDER p. 31

INSTALLATION GUIDELINE p. 203

VDI 3004	B2 4036 (BMW)	075.90.40 (FCA)	W-DX35-60M (Ford)
90.25.97 (GM)	90.25.28 (GM)	39D 549 (VW)	

NG 16 x 1.5

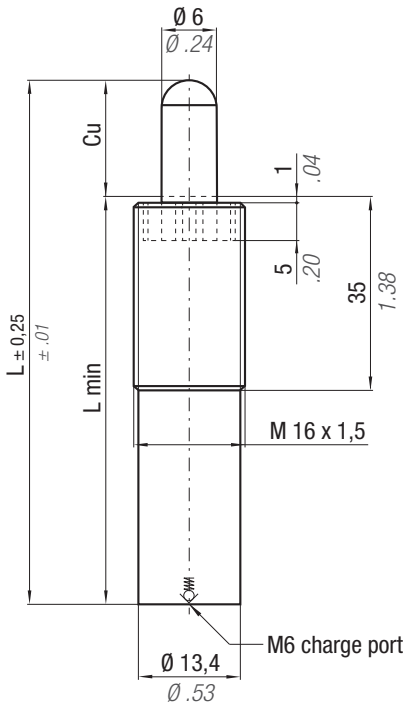

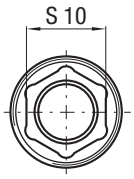

cod. 39CM01A
(optional)

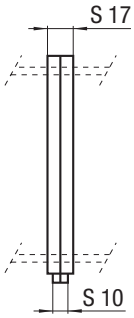

*** $F1_i$ =**
Isothermal end force at 100% Cu p. 18

**** $F1_p$ =**
Polytrophic end force at 100% Cu

ACTIVE SAFETY

NE
NG

USAS

N_2	°F 32 - 176	°C 0 ~ 80	ΔP	P max	P min	S	SPM	Max Speed	Maintenance kit
			± 0,33 %/°C	150 bar *2175 psi*	10 bar *145 psi*	0,28 cm² *0.043 in²*	~ 50 - 100 (at 20°C)	1,8 m/s	Disposable

CODE	Cu mm	Cu inch	L mm	L inch	L min mm	L min inch	~Kg	~lb	PED 2014/68/EU
NG 16 x 1,5-010-A-...	10	*0.39*	80	*3.15*	70	*2.76*	0,05	*0.11*	✓
NG 16 x 1,5-020-A-...	20	*0.79*	100	*3.94*	80	*3.15*	0,06	*0.13*	✓
NG 16 x 1,5-030-A-...	30	*1.18*	120	*4.72*	90	*3.54*	0,07	*0.15*	✓
NG 16 x 1,5-040-A-...	40	*1.57*	140	*5.51*	100	*3.94*	0,07	*0.15*	✓
NG 16 x 1,5-050-A-...	50	*1.97*	160	*6.30*	110	*4.33*	0,08	*0.18*	✓
NG 16 x 1,5-060-A-...	60	*2.36*	180	*7.09*	120	*4.72*	0,08	*0.18*	✓
NG 16 x 1,5-070-A-...	70	*2.76*	200	*7.87*	130	*5.12*	0,09	*0.20*	✓
NG 16 x 1,5-080-A-...	80	*3.15*	220	*8.66*	140	*5.51*	0,10	*0.22*	✓
NG 16 x 1,5-100-A-...	100	*3.94*	260	*10.24*	160	*6.30*	0,11	*0.24*	✓

Force color code	P bar	P psi	F0 Initial force ± 5% +20°C daN	F0 +68°F lb	$F1_i$ End force*	$F1_p$ End force**
GR	20	*290*	6	*13*	1,39 x F0	1,67 x F0
BU	40	*580*	11	*25*	1,39 x F0	1,67 x F0
RD	75	*1088*	21	*47*	1,39 x F0	1,67 x F0
YW	150	*2175*	42	*94*	1,39 x F0	1,67 x F0
BK	10-150	*145-2175*	3-42	*7-95*	1,39 x F0	1,67 x F0

P = nominal charging pressure

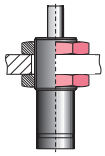

DM 16

HOW TO ORDER
p. 31

INSTALLATION GUIDELINE
p. 203

NG 24 x 1.5

VDI 3004	075.90.40 (FCA)	W-DX35-60M (Ford)	90.25.95 (GM)
90.25.96 (GM)	39D 549 (VW)		

SPECIAL SPRINGS

ACTIVE SAFETY

USAS

OPAS

*** $F1_i$ =**
Isothermal end force at 100% Cu p. 18

**** $F1_p$ =**
Polytrophic end force at 100% Cu

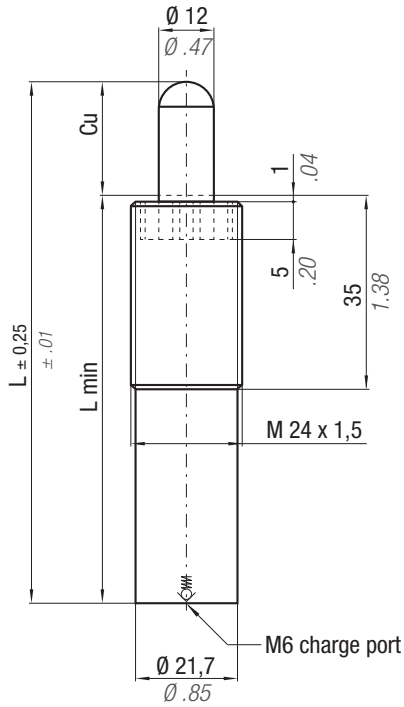

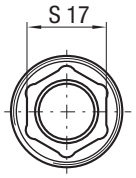

cod. 39CM01A
(optional)

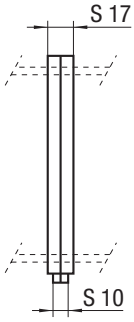

N_2	°F	°C	ΔP	P max	P min	S	SPM	Max Speed	Maintenance kit
	32 - 176	0 - 80	± 0,33 %/°C	150 bar *2175 psi*	10 bar *145 psi*	1,13 cm² *0.175 in²*	~ 50 - 100 (at 20°C)	1,8 m/s	Disposable

CODE	Cu mm	Cu *inch*	L mm	L *inch*	L min mm	L min *inch*	~Kg	*~lb*	PED 2014/68/EU
NG 24 x 1,5-010-A-...	10	*0.39*	80	*3.15*	70	*2.76*	0,15	*0.33*	✓
NG 24 x 1,5-020-A-...	20	*0.79*	100	*3.94*	80	*3.15*	0,17	*0.37*	✓
NG 24 x 1,5-030-A-...	30	*1.18*	120	*4.72*	90	*3.54*	0,19	*0.42*	✓
NG 24 x 1,5-040-A-...	40	*1.57*	140	*5.51*	100	*3.94*	0,22	*0.49*	✓
NG 24 x 1,5-050-A-...	50	*1.97*	160	*6.30*	110	*4.33*	0,24	*0.53*	✓
NG 24 x 1,5-060-A-...	60	*2.36*	180	*7.09*	120	*4.72*	0,26	*0.57*	✓
NG 24 x 1,5-070-A-...	70	*2.76*	200	*7.87*	130	*5.12*	0,28	*0.62*	✓
NG 24 x 1,5-080-A-...	80	*3.15*	220	*8.66*	140	*5.51*	0,29	*0.64*	✓
NG 24 x 1,5-100-A-...	100	*3.94*	260	*10.24*	160	*6.30*	0,31	*0.68*	✓

Force color code	P bar	P *psi*	F0 Initial force ± 5% +20°C *+68°F* daN	F0 *lb*	$F1_i$ End force*	$F1_p$ End force**
GR	20	*290*	23	*52*	1,55 x F0	2,02 x F0
BU	40	*580*	45	*101*	1,55 x F0	2,02 x F0
BR	60	*870*	67	*151*	1,55 x F0	2,02 x F0
RD	75	*1088*	85	*191*	1,55 x F0	2,02 x F0
YW	150	*2175*	170	*382*	1,55 x F0	2,02 x F0
BK	10-150	*145-2175*	11-170	*25-382*	1,55 x F0	2,02 x F0

P = nominal charging pressure

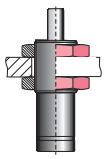

DM 24

HOW TO ORDER
p. 31

INSTALLATION GUIDELINE
p. 203

NE
NG

THIS PAGE IS INTENTIONALLY LEFT BLANK

VDI	BMW	FCA
Ford	MB	Nissan
PSA	VW	

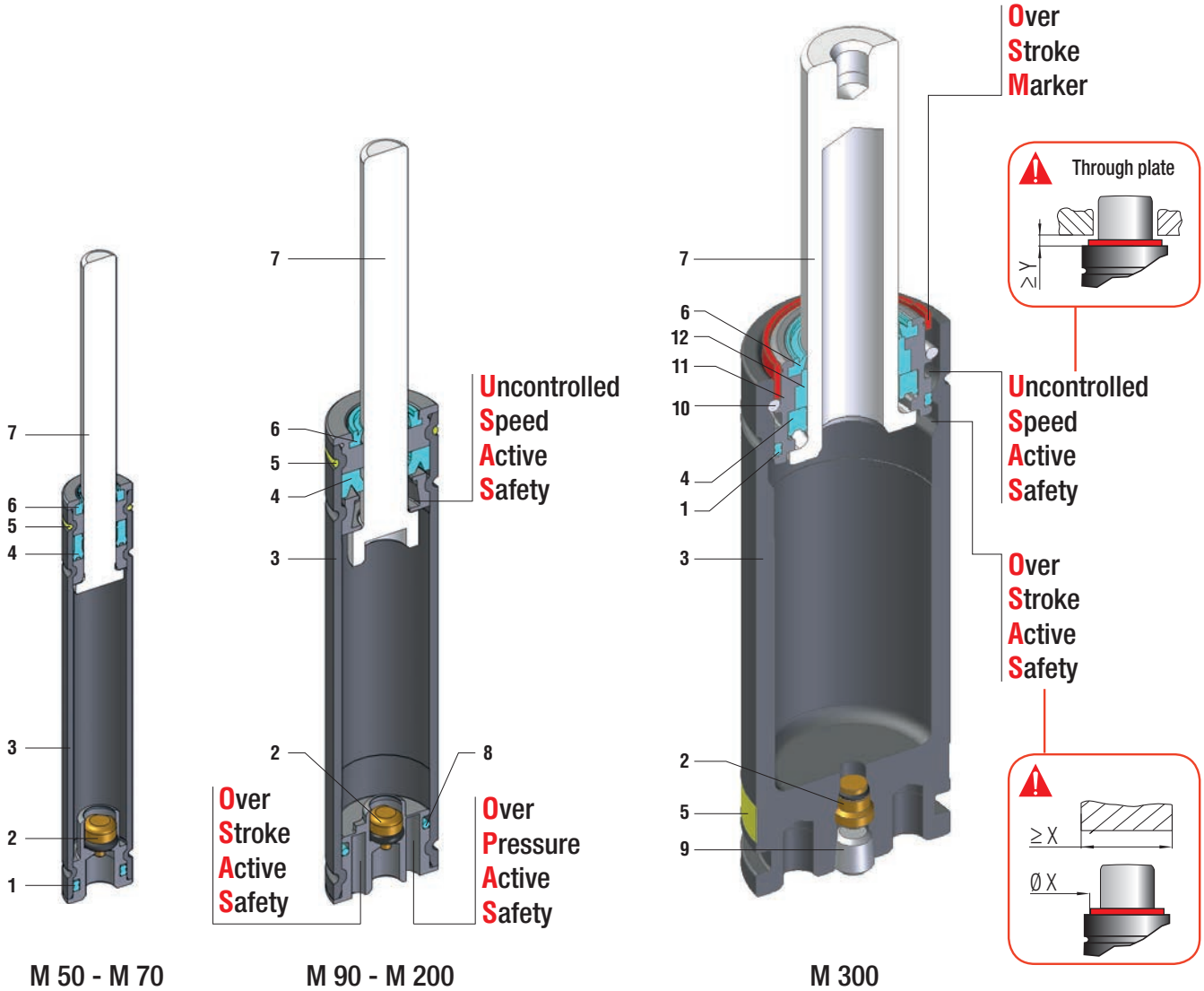

Mini cilindri - Mini cylinders - Mini Gasdruckfedern
Mini-ressorts - Mini cilindros - Mini-cilindros

SEALING	ROD SEAL	
DESIGN	RETAINING GROOVE DESIGN	BUSH-BODY DESIGN (M300 only)

1	Dual ring seal	**5**	Force color code	**9**	Stopper
2	Valve	**6**	Rod wiper	**10**	Retaining ring
3	Body	**7**	Rod (Nitrited Superfinished)	**11**	Bush
4	Rod seal	**8**	O-ring	**12**	Guide ring

RANGE CHART

Model	Body Ø		Stroke Cu		Initial force F0		OSAS	USAS	OPAS	SKUDO	SW
	mm	*inch*	mm	*inch*	daN	*lb*					
M 50	12	*0.47*	7 - 125	*0.28 - 4.92*	6 - 50	*13 - 112*	-	-	-	-	✓
M 50 TBI	5/8" 11 UNC		7 - 125	*0.28 - 4.92*	6 - 50	*13 - 112*	-	-	-	-	-
M 50 TBM1	M 16 X 1,5		7 - 125	*0.28 - 4.92*	6 - 50	*13 - 112*	-	-	-	-	-
M 50 TBM2	M 16 X 2		7 - 125	*0.28 - 4.92*	6 - 50	*13 - 112*	-	-	-	-	-
M 50 TEM	M 16 X 2		7 - 125	*0.28 - 4.92*	6 - 50	*13 - 112*	-	-	-	-	-
M 70	15	*0.59*	7 - 125	*0.28 - 4.92*	8 - 70	*18 - 157*	-	-	-	-	✓
M 90	19	*0.75*	7 - 125	*0.28 - 4.92*	5 - 90	*11 - 202*	✓	✓	✓	-	✓
M 90 TBM	M 24 X 1,5		7 - 125	*0.28 - 4.92*	5 - 90	*11 - 202*	✓	✓	✓	-	-
M 90 TEM	M 24 X 1,5		7 - 125	*0.28 - 4.92*	5 - 90	*11 - 202*	✓	✓	✓	-	-
M 90 TBI	1" 8 THD		7 - 125	*0.28 - 4.92*	5 - 90	*11 - 202*	✓	✓	✓	-	-
M 200	25	*0.98*	7 - 125	*0.28 - 4.92*	17 - 200	*38 - 450*	✓	✓	✓	-	✓
M 300	32	*1.26*	7 - 125	*0.28 - 4.92*	80 - 320	*180 - 719*	✓	✓	-	-	✓

✓ Built-in as standard ✓ Optional upon request

M

HOW TO ORDER

Series

Revision code

Model

M200-025-B-YW-W

Version

Stroke

Force color code

Available versions

M 200-025-B-YW

Standard code

Self contained

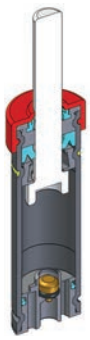

M 200-025-B-YW-W

Add "-W" to standard code

Self contained

+

Secondary wiper

SPECIAL SPRINGS

SW

ACTIVE SAFETY

* $F1_i$ = Isothermal end force at 100% Cu p. 18

** $F1_p$ = Polytrophic end force at 100% Cu

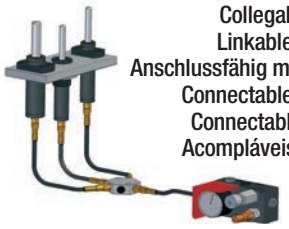

Collegabile con tubi
Linkable with hoses
Anschlussfähig mit Leitungen
Connectable avec tubes
Connectable con tubos
Acompláveis com tubos

Micro 32°

Force color code	P bar	P psi	F0 daN	F0 lb
GR	45	653	13	29
BU	90	1305	25	56
RD	135	1958	38	85
YW	180	2610	50	112
BK	20-180	290-2610	6-50	13-112

F0: Initial force ± 5% at +20°C +68°F

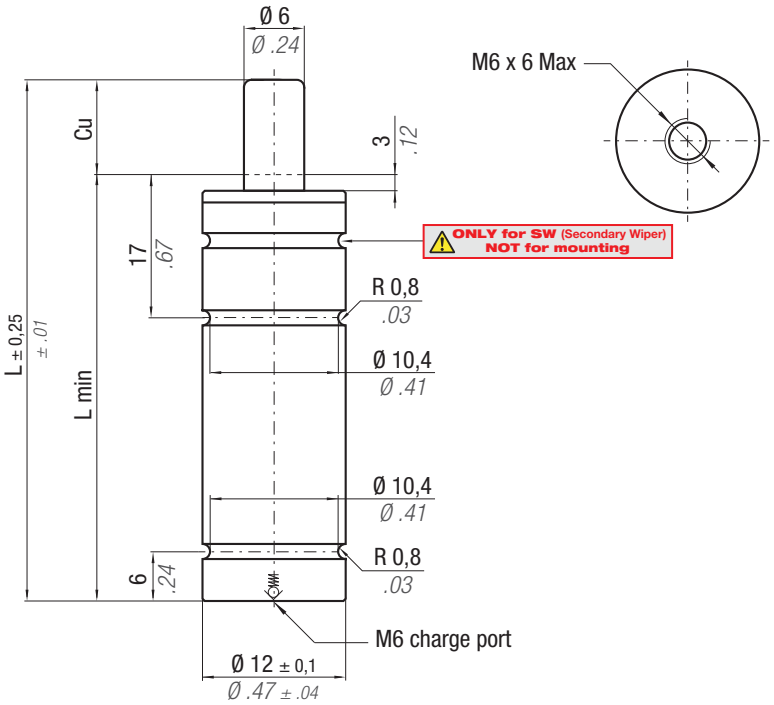

N_2	°F 32 - 176	°C 0 - 80	ΔP	P max	P min	S	SPM	Max Speed	Maintenance kit
			± 0,33 %/°C	180 bar / 2610 psi	20 bar / 290 psi	0,28 cm² / 0.043 in²	~ 100 - 150 (at 20°C)	1,8 m/s	Disposable

CODE	Cu mm	Cu inch	L mm	L inch	L min mm	L min inch	$F1_i$ * End force daN	$F1_i$ lb	$F1_p$ ** End force daN	$F1_p$ lb	V0 cm³	V0 in³	~Kg	~lb	PED 2014/68/EU
M50 - 007 - A - …	7	0.28	56	2.20	49	1.93	1,34 x F0		1,56 x F0		-	-	0,03	0.07	✓
M50 - 010 - A - …	10	0.39	62	2.441	52	2.05	1,41 x F0		1,67 x F0		-	-	0,03	0.07	✓
M50 - 013 - A - …	12,7	0.50	67,4	2.65	54,7	2.15	1,44 x F0		1,72 x F0		-	-	0,03	0.07	✓
M50 - 015 - A - …	15	0.59	72	2.83	57	2.24	1,48 x F0		1,79 x F0		-	-	0,03	0.07	✓
M50 - 019 - A - …	19	0.75	80	3.15	61	2.40	1,52 x F0		1,85 x F0		-	-	0,03	0.07	✓
M50 - 025 - A - …	25	0.98	92	3.62	67	2.64	1,56 x F0		1,92 x F0		-	-	0,03	0.07	✓
M50 - 038 - A - …	38	1.50	118	4.65	80	3.15	1,61 x F0		2,01 x F0		-	-	0,04	0.09	✓
M50 - 050 - A - …	50	1.97	142	5.59	92	3.62	1,63 x F0		2,05 x F0		-	-	0,05	0.11	✓
M50 - 063 - A - …	63,5	2.50	172	6.77	108,5	4.27	1,61 x F0		2,01 x F0		-	-	0,06	0.13	✓
M50 - 075 - A - …	75	2.95	195	7.68	120	4.72	1,63 x F0		2,04 x F0		-	-	0,06	0.13	✓
M50 - 080 - A - …	80	3.15	205	8.07	125	4.92	1,63 x F0		2,05 x F0		-	-	0,07	0.15	✓
M50 - 100 - A - …	100	3.94	245	9.65	145	5.71	1,65 x F0		2,08 x F0		-	-	0,08	0.18	✓
M50 - 125 - A - …	125	4.92	295	11.61	170	6.69	1,67 x F0		2,11 x F0		-	-	0,09	0.20	✓

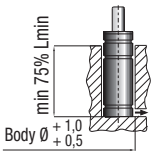

Drop-In

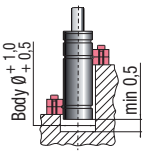

FC 12

Bottom mount

HOW TO ORDER p. 39

INSTALLATION GUIDELINE p. 203

M 50 TBI
threaded

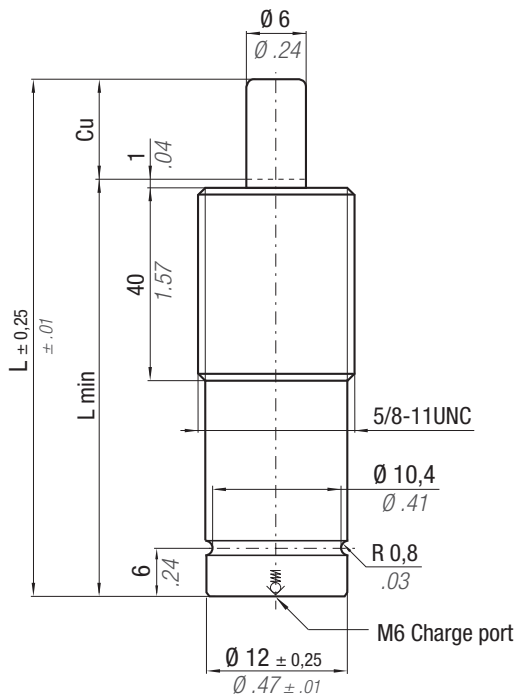

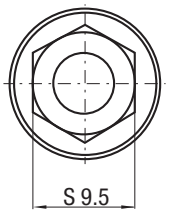

*** $F1_i$ =**
Isothermal end force at 100% Cu p. 18

**** $F1_p$ =**
Polytrophic end force at 100% Cu

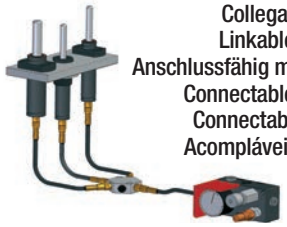

Collegabile con tubi
Linkable with hoses
Anschlussfähig mit Leitungen
Connectable avec tubes
Connectable con tubos
Acompláveis com tubos

Micro 32°

ACTIVE SAFETY

M

Force color code	P bar	P psi	F0 Initial force ± 5% at +20°C +68°F daN	F0 lb
GR	45	653	13	29
BU	90	1305	25	56
RD	135	1958	38	85
YW	180	2610	50	112
BK	20-180	290-2610	6-50	13-112

N2	°F 32 - 176 / °C 0 - 80	ΔP	P max	P min	S	SPM	Max Speed	Maintenance kit
		± 0,33 %/°C	180 bar / 2610 psi	20 bar / 290 psi	0,28 cm² / 0.043 in²	~ 100 - 150 (at 20°C)	1,8 m/s	Disposable

CODE	Cu mm	Cu inch	L mm	L inch	L min mm	L min inch	$F1_i$ End force * daN	$F1_i$ lb	$F1_p$ End force ** daN	$F1_p$ lb	V0 cm³	V0 in³	~Kg	~lb	PED 2014/68/EU
M50 - 007 - A - ... - TBI	7	0.28	56	2.20	49	1.93	1,34 x F0		1,56 x F0		-	-	0,03	0.07	✓
M50 - 010 - A - ... - TBI	10	0.39	62	2.441	52	2.05	1,41 x F0		1,67 x F0		-	-	0,03	0.07	✓
M50 - 013 - A - ... - TBI	12,7	0.50	67,4	2.65	54,7	2.15	1,44 x F0		1,72 x F0		-	-	0,03	0.07	✓
M50 - 015 - A - ... - TBI	15	0.59	72	2.83	57	2.24	1,48 x F0		1,79 x F0		-	-	0,03	0.07	✓
M50 - 019 - A - ... - TBI	19	0.75	80	3.15	61	2.40	1,52 x F0		1,85 x F0		-	-	0,03	0.07	✓
M50 - 025 - A - ... - TBI	25	0.98	92	3.62	67	2.64	1,56 x F0		1,92 x F0		-	-	0,03	0.07	✓
M50 - 038 - A - ... - TBI	38	1.50	118	4.65	80	3.15	1,61 x F0		2,01 x F0		-	-	0,04	0.09	✓
M50 - 050 - A - ... - TBI	50	1.97	142	5.59	92	3.62	1,63 x F0		2,05 x F0		-	-	0,05	0.11	✓
M50 - 063 - A - ... - TBI	63,5	2.50	172	6.77	108,5	4.27	1,61 x F0		2,01 x F0		-	-	0,06	0.13	✓
M50 - 075 - A - ... - TBI	75	2.95	195	7.68	120	4.72	1,63 x F0		2,04 x F0		-	-	0,06	0.13	✓
M50 - 080 - A - ... - TBI	80	3.15	205	8.07	125	4.92	1,63 x F0		2,05 x F0		-	-	0,07	0.15	✓
M50 - 100 - A - ... - TBI	100	3.94	245	9.65	145	5.71	1,65 x F0		2,08 x F0		-	-	0,08	0.18	✓
M50 - 125 - A - ... - TBI	125	4.92	295	11.61	170	6.69	1,67 x F0		2,11 x F0		-	-	0,09	0.20	✓

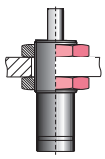

39DI5/8-11A

HOW TO ORDER
p. 39

INSTALLATION GUIDELINE
p. 203

M 50 TBM1
threaded

SPECIAL SPRINGS

ACTIVE SAFETY

* $F1_i$ = Isothermal end force at 100% Cu p. 18

** $F1_p$ = Polytrophic end force at 100% Cu

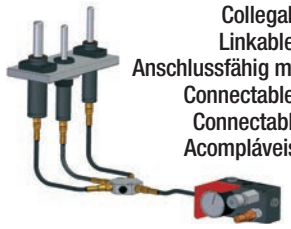

Collegabile con tubi
Linkable with hoses
Anschlussfähig mit Leitungen
Connectable avec tubes
Connectable con tubos
Acompláveis com tubos

Micro 32°

Force color code	P bar	P psi	F0 daN	F0 lb
GR	45	653	13	29
BU	90	1305	25	56
RD	135	1958	38	85
YW	180	2610	50	112
BK	20-180	290-2610	6-50	13-112

F0 Initial force ± 5% at +20°C +68°F

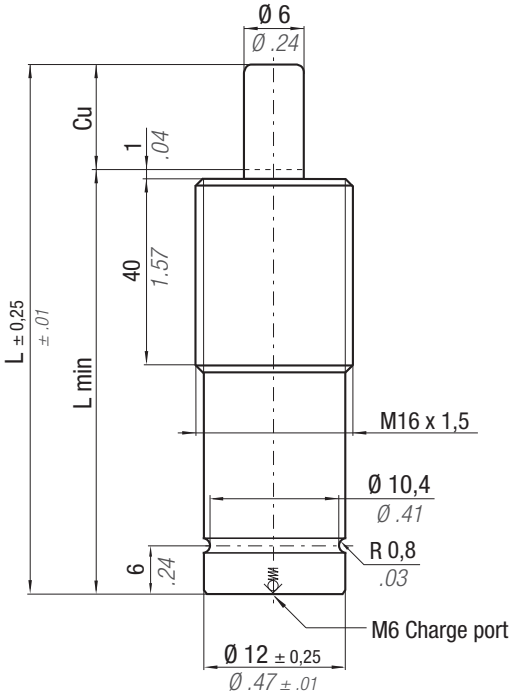

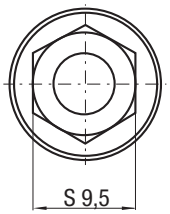

N2	°F 32 - 176	°C 0 - 80	ΔP	P max	P min	S	SPM	Max Speed	Maintenance kit
			± 0,33 %/°C	180 bar / 2610 psi	20 bar / 290 psi	0,28 cm² / 0.043 in²	~ 100 - 150 (at 20°C)	1,8 m/s	Disposable

CODE	Cu mm	Cu inch	L mm	L inch	L min mm	L min inch	$F1_i$ * End force daN	$F1_i$ lb	$F1_p$ ** End force daN	$F1_p$ lb	V0 cm³	V0 in³	~Kg	~lb	PED 2014/68/EU
M50 - 007 - A - ... - TBM1	7	0.28	56	2.20	49	1.93	1,34 x F0		1,56 x F0		-	-	0,03	0.07	✓
M50 - 010 - A - ... - TBM1	10	0.39	62	2.441	52	2.05	1,41 x F0		1,67 x F0		-	-	0,03	0.07	✓
M50 - 013 - A - ... - TBM1	12,7	0.50	67,4	2.65	54,7	2.15	1,44 x F0		1,72 x F0		-	-	0,03	0.07	✓
M50 - 015 - A - ... - TBM1	15	0.59	72	2.83	57	2.24	1,48 x F0		1,79 x F0		-	-	0,03	0.07	✓
M50 - 019 - A - ... - TBM1	19	0.75	80	3.15	61	2.40	1,52 x F0		1,85 x F0		-	-	0,03	0.07	✓
M50 - 025 - A - ... - TBM1	25	0.98	92	3.62	67	2.64	1,56 x F0		1,92 x F0		-	-	0,03	0.07	✓
M50 - 038 - A - ... - TBM1	38	1.50	118	4.65	80	3.15	1,61 x F0		2,01 x F0		-	-	0,04	0.09	✓
M50 - 050 - A - ... - TBM1	50	1.97	142	5.59	92	3.62	1,63 x F0		2,05 x F0		-	-	0,05	0.11	✓
M50 - 063 - A - ... - TBM1	63,5	2.50	172	6.77	108,5	4.27	1,61 x F0		2,01 x F0		-	-	0,06	0.13	✓
M50 - 075 - A - ... - TBM1	75	2.95	195	7.68	120	4.72	1,63 x F0		2,04 x F0		-	-	0,06	0.13	✓
M50 - 080 - A - ... - TBM1	80	3.15	205	8.07	125	4.92	1,63 x F0		2,05 x F0		-	-	0,07	0.15	✓
M50 - 100 - A - ... - TBM1	100	3.94	245	9.65	145	5.71	1,65 x F0		2,08 x F0		-	-	0,08	0.18	✓
M50 - 125 - A - ... - TBM1	125	4.92	295	11.61	170	6.69	1,67 x F0		2,11 x F0		-	-	0,09	0.20	✓

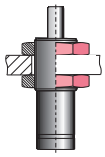

DM 16

HOW TO ORDER
p. 39

INSTALLATION GUIDELINE
p. 203

M 50 TBM2
threaded

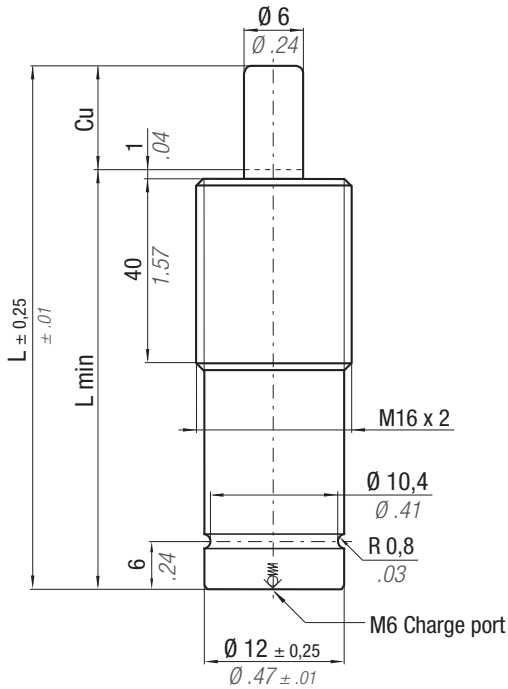

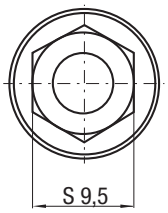

*** $F1_i$ =**
Isothermal end force at 100% Cu p. 18

**** $F1_p$ =**
Polytrophic end force at 100% Cu

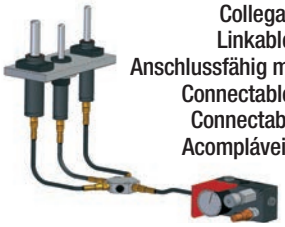

Collegabile con tubi
Linkable with hoses
Anschlussfähig mit Leitungen
Connectable avec tubes
Connectable con tubos
Acompláveis com tubos

Micro 32°

ACTIVE SAFETY

M

Force color code	P bar	P psi	F0 daN	F0 lb
GR	45	653	13	29
BU	90	1305	25	56
RD	135	1958	38	85
YW	180	2610	50	112
BK	20-180	290-2610	6-50	13-112

F0: Initial force ± 5% at +20°C +68°F

N2	°F 32 - 176	°C 0 ~ 80	ΔP	P max	P min	S	SPM	Max Speed	Maintenance kit
			± 0,33 %/°C	180 bar / 2610 psi	20 bar / 290 psi	0,28 cm² / 0.043 in²	~ 100 - 150 (at 20°C)	1,8 m/s	Disposable

CODE	Cu mm	Cu inch	L mm	L inch	L min mm	L min inch	$F1_i$ End force * daN	$F1_i$ lb	$F1_p$ End force ** daN	$F1_p$ lb	V0 cm³	V0 in³	~Kg	~lb	PED 2014/68/EU
M50 - 007 - A - ... - TBM2	7	0.28	56	2.20	49	1.93	1,34 x F0		1,56 x F0		-	-	0,03	0.07	✓
M50 - 010 - A - ... - TBM2	10	0.39	62	2.441	52	2.05	1,41 x F0		1,67 x F0		-	-	0,03	0.07	✓
M50 - 013 - A - ... - TBM2	12,7	0.50	67,4	2.65	54,7	2.15	1,44 x F0		1,72 x F0		-	-	0,03	0.07	✓
M50 - 015 - A - ... - TBM2	15	0.59	72	2.83	57	2.24	1,48 x F0		1,79 x F0		-	-	0,03	0.07	✓
M50 - 019 - A - ... - TBM2	19	0.75	80	3.15	61	2.40	1,52 x F0		1,85 x F0		-	-	0,03	0.07	✓
M50 - 025 - A - ... - TBM2	25	0.98	92	3.62	67	2.64	1,56 x F0		1,92 x F0		-	-	0,03	0.07	✓
M50 - 038 - A - ... - TBM2	38	1.50	118	4.65	80	3.15	1,61 x F0		2,01 x F0		-	-	0,04	0.09	✓
M50 - 050 - A - ... - TBM2	50	1.97	142	5.59	92	3.62	1,63 x F0		2,05 x F0		-	-	0,05	0.11	✓
M50 - 063 - A - ... - TBM2	63,5	2.50	172	6.77	108,5	4.27	1,61 x F0		2,01 x F0		-	-	0,06	0.13	✓
M50 - 075 - A - ... - TBM2	75	2.95	195	7.68	120	4.72	1,63 x F0		2,04 x F0		-	-	0,06	0.13	✓
M50 - 080 - A - ... - TBM2	80	3.15	205	8.07	125	4.92	1,63 x F0		2,05 x F0		-	-	0,07	0.15	✓
M50 - 100 - A - ... - TBM2	100	3.94	245	9.65	145	5.71	1,65 x F0		2,08 x F0		-	-	0,08	0.18	✓
M50 - 125 - A - ... - TBM2	125	4.92	295	11.61	170	6.69	1,67 x F0		2,11 x F0		-	-	0,09	0.20	✓

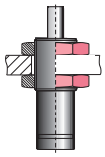

39DM16X2A

HOW TO ORDER
p. 39

INSTALLATION GUIDELINE
p. 203

M 50 TEM
threaded

SPECIAL SPRINGS

ACTIVE SAFETY

* $F1_i$ = Isothermal end force at 100% Cu p. 18

** $F1_p$ = Polytrophic end force at 100% Cu

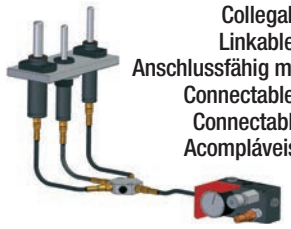

Collegabile con tubi
Linkable with hoses
Anschlussfähig mit Leitungen
Connectable avec tubes
Connectable con tubos
Acompláveis com tubos

Micro 32°

Force color code	P bar	P psi	F0 daN	F0 lb
GR	45	653	13	29
BU	90	1305	25	56
RD	135	1958	38	85
YW	180	2610	50	112
BK	20-180	290-2610	6-50	13-112

F0 Initial force ± 5% at +20°C +68°F

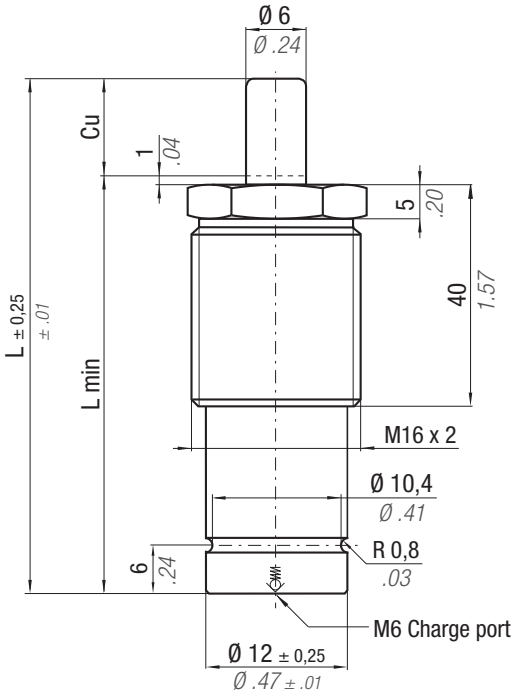

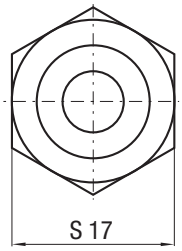

N2	°F 32 - 176	°C 0 - 80	ΔP	P max	P min	S	SPM	Max Speed	Maintenance kit
			± 0,33 %/°C	180 bar 2610 psi	20 bar 290 psi	0,28 cm² 0.043 in²	~ 100 - 150 (at 20°C)	1,8 m/s	Disposable

CODE	Cu mm	Cu inch	L mm	L inch	L min mm	L min inch	$F1_i$ * End force daN	$F1_i$ lb	$F1_p$ ** End force daN	$F1_p$ lb	V0 cm³	V0 in³	~Kg	~lb	PED 2014/68/EU
M50 - 007 - A - ... - TEM	7	0.28	56	2.20	49	1.93	1,34 x F0		1,56 x F0		-	-	0,03	0.07	✓
M50 - 010 - A - ... - TEM	10	0.39	62	2.441	52	2.05	1,41 x F0		1,67 x F0		-	-	0,03	0.07	✓
M50 - 013 - A - ... - TEM	12,7	0.50	67,4	2.65	54,7	2.15	1,44 x F0		1,72 x F0		-	-	0,03	0.07	✓
M50 - 015 - A - ... - TEM	15	0.59	72	2.83	57	2.24	1,48 x F0		1,79 x F0		-	-	0,03	0.07	✓
M50 - 019 - A - ... - TEM	19	0.75	80	3.15	61	2.40	1,52 x F0		1,85 x F0		-	-	0,03	0.07	✓
M50 - 025 - A - ... - TEM	25	0.98	92	3.62	67	2.64	1,56 x F0		1,92 x F0		-	-	0,03	0.07	✓
M50 - 038 - A - ... - TEM	38	1.50	118	4.65	80	3.15	1,61 x F0		2,01 x F0		-	-	0,04	0.09	✓
M50 - 050 - A - ... - TEM	50	1.97	142	5.59	92	3.62	1,63 x F0		2,05 x F0		-	-	0,05	0.11	✓
M50 - 063 - A - ... - TEM	63,5	2.50	172	6.77	108,5	4.27	1,61 x F0		2,01 x F0		-	-	0,06	0.13	✓
M50 - 075 - A - ... - TEM	75	2.95	195	7.68	120	4.72	1,63 x F0		2,04 x F0		-	-	0,06	0.13	✓
M50 - 080 - A - ... - TEM	80	3.15	205	8.07	125	4.92	1,63 x F0		2,05 x F0		-	-	0,07	0.15	✓
M50 - 100 - A - ... - TEM	100	3.94	245	9.65	145	5.71	1,65 x F0		2,08 x F0		-	-	0,08	0.18	✓
M50 - 125 - A - ... - TEM	125	4.92	295	11.61	170	6.69	1,67 x F0		2,11 x F0		-	-	0,09	0.20	✓

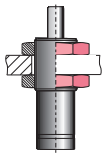

39DM16X2A

HOW TO ORDER p. 39

INSTALLATION GUIDELINE p. 203

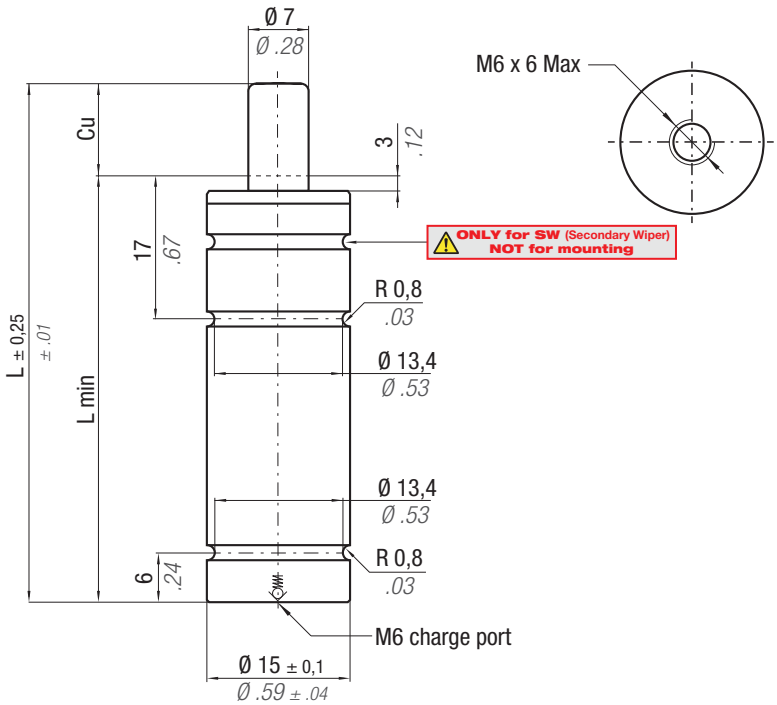

*** $F1_i$ =** Isothermal end force at 100% Cu p. 18

**** $F1_p$ =** Polytrophic end force at 100% Cu

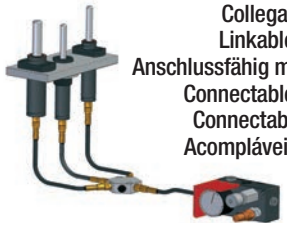

Collegabile con tubi
Linkable with hoses
Anschlussfähig mit Leitungen
Connectable avec tubes
Connectable con tubos
Acompláveis com tubos

Micro 32°

SW

ACTIVE SAFETY

M

Force color code	P bar	P psi	F0 daN	F0 lb
GR	45	653	18	40
BU	90	1305	35	79
RD	135	1958	50	112
YW	180	2610	70	157
BK	20-180	290-2610	8-70	18-157

F0: Initial force ± 5% at +20°C +68°F

N2	°F 32 - 176	°C 0 ~ 80	ΔP	P max	P min	S	SPM	Max Speed	Maintenance kit
			± 0,33 %/°C	180 bar / 2610 psi	20 bar / 290 psi	0,38 cm² / 0.059 in²	~ 100 - 150 (at 20°C)	1,8 m/s	Disposable

CODE	Cu mm	Cu inch	L mm	L inch	L min mm	L min inch	$F1_i$ * End force daN	$F1_i$ lb	$F1_p$ ** End force daN	$F1_p$ lb	V0 cm³	V0 in³	~Kg	~lb	PED 2014/68/EU
M70 - 007 - A - ...	7	0.28	56	2.20	49	1.93	1,28 x F0		1,47 x F0		-	-	0,04	0.09	✓
M70 - 010 - A - ...	10	0.39	62	2.44	52	2.05	1,34 x F0		1,56 x F0		-	-	0,05	0.11	✓
M70 - 013 - A - ...	12,7	0.50	67,4	2.65	54,7	2.15	1,37 x F0		1,61 x F0		-	-	0,05	0.11	✓
M70 - 015 - A - ...	15	0.59	72	2.83	57	2.24	1,40 x F0		1,66 x F0		-	-	0,05	0.11	✓
M70 - 019 - A - ...	19	0.75	80	3.15	61	2.40	1,43 x F0		1,72 x F0		-	-	0,05	0.11	✓
M70 - 025 - A - ...	25	0.98	92	3.62	67	2.64	1,47 x F0		1,78 x F0		-	-	0,06	0.13	✓
M70 - 038 - A - ...	38	1.50	118	4.65	80	3.15	1,51 x F0		1,85 x F0		-	-	0,07	0.15	✓
M70 - 050 - A - ...	50	1.97	142	5.59	92	3.62	1,54 x F0		1,89 x F0		-	-	0,08	0.18	✓
M70 - 063 - A - ...	63,5	2.50	172	6.77	108,5	4.27	1,52 x F0		1,87 x F0		-	-	0,09	0.20	✓
M70 - 075 - A - ...	75	2.95	195	7.68	120	4.72	1,54 x F0		1,89 x F0		-	-	0,10	0.22	✓
M70 - 080- A - ...	80	3.15	205	8.071	125	4.92	1,54 x F0		1,90 x F0		-	-	0,10	0.22	✓
M70 - 100 - A - ...	100	3.94	245	9.65	145	5.71	1,56 x F0		1,93 x F0		-	-	0,12	0.26	✓
M70 - 125 - A - ...	125	4.92	295	11.61	170	6.69	1,57 x F0		1,95 x F0		-	-	0,14	0.31	✓

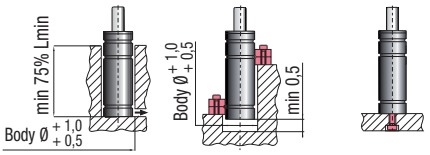

Drop-In | FC 15 | Bottom mount

HOW TO ORDER p. 39

INSTALLATION GUIDELINE p. 203

M 90

ISO 11901 - 1	VDI 3003 - Blatt 2	B2 4007 (BMW)	B8 3180 220 000 002(MB)
075.90.50 (FCA)	39D 878 (VW)		

SPECIAL SPRINGS

SW

ACTIVE SAFETY

OSAS

USAS

OPAS

Il nuovo codice sarà fornito solo ad esaurimento del vecchio - The new code will be supplied only when the old will be out of stock - Der neue Kode wird geliefert nur wenn der alte nicht mehr im Lager ist - Le nouveau code sera fourni uniquement lorsque le vieux stock sera ecoulé - El nuevo código será suministrado sólo cuando el viejo está fuera de stock - O novo código irá ser fornecido apenas quando o antigo esgotar stock

*** $F1_i$ =** Isothermal end force at 100% Cu p. 18

**** $F1_p$ =** Polytrophic end force at 100% Cu

Collegabile con tubi - Linkable with hoses
Anschlussfähig mit Leitungen
Connectable avec tubes - Connectable con tubos
Acompláveis com tubos

Micro 32°

Force color code	P bar	P psi	Fo Initial force ± 5% at +20°C +68°F daN	Fo lb
OR	10	145	5	11
PR	20	290	10	22
GR	60	870	30	67
BU	100	1450	50	112
RD	140	2030	70	157
YW	180	2610	90	202
BK	10-180	145-2610	5-90	11-202

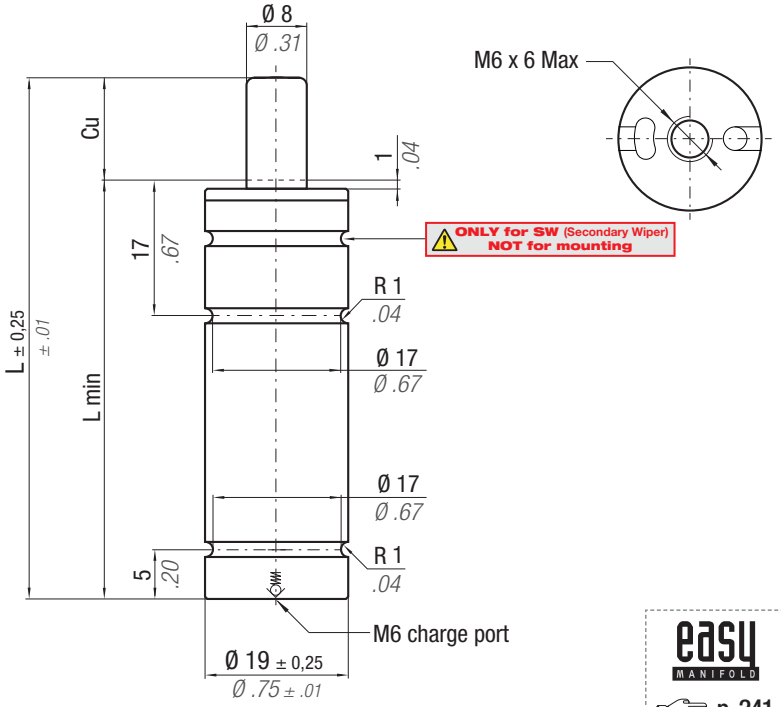

easy MANIFOLD p. 241

N_2	°F 32 - 176	°C 0 - 80	ΔP	P max	P min	S	SPM	Max Speed	Maintenance kit
			± 0,33 %/°C	180 bar 2610 psi	10 bar 145 psi	0,50 cm² 0.078 in²	~ 100 - 150 (at 20°C)	1,8 m/s	Disposable

CODE PHASING OUT from 05/2019	NEW	Cu mm	Cu inch	L mm	L inch	L min mm	L min inch	$F1_i$ * End force daN	$F1_i$ lb	$F1_p$ ** End force daN	$F1_p$ lb	Vo cm³	Vo in³	~Kg	~lb	PED 2014/68/EU
M90 - 007 - A - …	M90 - 007 - B - …	7	0.28	56	2.20	49	1.93	1,21 x F0		1,39 x F0		-	-	0,07	0.15	✓
M90 - 010 - A - …	M90 - 010 - B - …	10	0.39	62	2.44	52	2.05	1,25 x F0		1,44 x F0		-	-	0,07	0.15	✓
M90 - 013 - A - …	M90 - 013 - B - …	12,7	0.50	67,4	2.65	54,7	2.15	1,27 x F0		1,48 x F0		-	-	0,08	0.18	✓
M90 - 015 - A - …	M90 - 015 - B - …	15	0.59	72	2.83	57	2.24	1,28 x F0		1,5 x F0		-	-	0,08	0.18	✓
M90 - 025 - A - …	M90 - 025 - B - …	25	0.98	92	3.62	67	2.64	1,32 x F0		1,57 x F0		-	-	0,09	0.20	✓
M90 - 038 - A - …	M90 - 038 - B - …	38,1	1.50	118,2	4.65	80,1	3.15	1,35 x F0		1,6 x F0		-	-	0,11	0.24	✓
M90 - 050 - A - …	M90 - 050 - B - …	50	1.97	142	5.59	92	3.62	1,36 x F0		1,62 x F0		-	-	0,12	0.26	✓
M90 - 063 - A - …	M90 - 063 - B - …	63,5	2.50	172	6.77	108,5	4.27	1,36 x F0		1,62 x F0		-	-	0,14	0.31	✓
M90 - 080 - A - …	M90 - 080 - B - …	80	3.15	205	8.07	125	4.92	1,37 x F0		1,64 x F0		-	-	0,15	0.33	✓
M90 - 100 - A - …	M90 - 100 - B - …	100	3.94	245	9.65	145	5.71	1,37 x F0		1,65 x F0		-	-	0,17	0.37	✓
M90 - 125 - A - …	M90 - 125 - B - …	125	4.92	295	11.61	170	6.69	1,38 x F0		1,66 x F0		-	-	0,20	0.44	✓

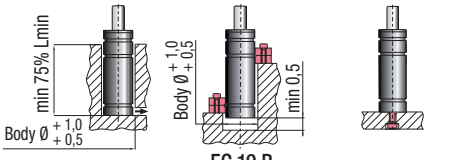

Drop-in — FC 19 B, FCC 19 A — Bottom mount

HOW TO ORDER p. 39

INSTALLATION GUIDELINE p. 203

M 90 TBM
threaded

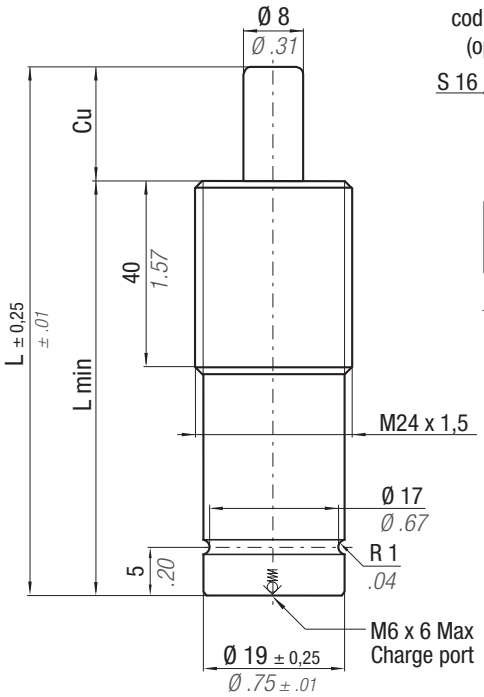

cod. 39 TBT
(optional)

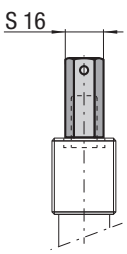

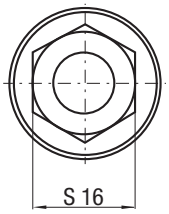

Senza riserva corsa
Without reserve of stroke
Ohne Hubreserve
Sans course de réserve
Sin margen de Carrera
Sem reserva de curso

NON superare 90% Cu
DO NOT exceed 90% Cu
NICHT überschreiten die 90% Cu
NE PAS dépasser 90% Cu
NO superar el 90% Cu
NÃO se excedam os 90% Cu

Il nuovo codice sarà fornito solo ad esaurimento del vecchio - The new code will be supplied only when the old will be out of stock - Der neue Kode wird geliefert nur wenn der alte nicht mehr im Lager ist - Le nouveau code sera fourni uniquement lorsque le vieux stock sera ecoulé - El nuevo código será suministrado sólo cuando el viejo está fuera de stock - O novo código irá ser fornecido apenas quando o antigo esgotar stock

*** $F1_i$ =** Isothermal end force at 100% Cu p. 18

**** $F1_p$ =** Polytrophic end force at 100% Cu

Collegabile con tubi - Linkable with hoses
Anschlussfähig mit Leitungen
Connectable avec tubes - Connectable con tubos
Acompláveis com tubos

Micro 32°

Force color code	P bar	P psi	F0 Initial force ± 5% at +20°C +68°F daN	F0 lb
OR	10	145	5	11
PR	20	290	10	22
GR	60	870	30	67
BU	100	1450	50	112
RD	140	2030	70	157
YW	180	2610	90	202
BK	10-180	145-2610	5-90	11-202

ACTIVE SAFETY

OSAS

USAS

OPAS

M

N_2	°F 32 - 176 / °C 0 - 80	ΔP	P max	P min	S	SPM	Max Speed	Maintenance kit
		± 0,33 %/°C	180 bar / 2610 psi	10 bar / 145 psi	0,50 cm² / 0.078 in²	~ 100 - 150 (at 20°C)	1,8 m/s	Disposable

CODE PHASING OUT from 05/2019	NEW	Cu mm	Cu inch	L mm	L inch	L min mm	L min inch	$F1_i$ * End force daN	$F1_i$ lb	$F1_p$ ** End force daN	$F1_p$ lb	V0 cm³	V0 in³	~Kg	~lb	PED 2014/68/EU
M90 - 007 - A - ... - TBM	M90 - 007 - B - ... - TBM	7	0.28	56	2.20	49	1.93	1,21 x F0		1,39 x F0		-	-	0,07	0.15	✓
M90 - 010 - A - ... - TBM	M90 - 010 - B - ... - TBM	10	0.39	62	2.44	52	2.05	1,25 x F0		1,44 x F0		-	-	0,07	0.15	✓
M90 - 013 - A - ... - TBM	M90 - 013 - B - ... - TBM	12,7	0.50	67,4	2.65	54,7	2.15	1,27 x F0		1,48 x F0		-	-	0,08	0.18	✓
M90 - 015 - A - ... - TBM	M90 - 015 - B - ... - TBM	15	0.59	72	2.83	57	2.24	1,28 x F0		1,5 x F0		-	-	0,08	0.18	✓
M90 - 025 - A - ... - TBM	M90 - 025 - B - ... - TBM	25	0.98	92	3.62	67	2.64	1,32 x F0		1,57 x F0		-	-	0,09	0.20	✓
M90 - 038 - A - ... - TBM	M90 - 038 - B - ... - TBM	38,1	1.50	118,2	4.65	80,1	3.15	1,35 x F0		1,6 x F0		-	-	0,11	0.24	✓
M90 - 050 - A - ... - TBM	M90 - 050 - B - ... - TBM	50	1.97	142	5.59	92	3.62	1,36 x F0		1,62 x F0		-	-	0,12	0.26	✓
M90 - 063 - A - ... - TBM	M90 - 063 - B - ... - TBM	63,5	2.50	172	6.77	108,5	4.27	1,36 x F0		1,62 x F0		-	-	0,14	0.31	✓
M90 - 080 - A - ... - TBM	M90 - 080 - B - ... - TBM	80	3.15	205	8.07	125	4.92	1,37 x F0		1,64 x F0		-	-	0,15	0.33	✓
M90 - 100 - A - ... - TBM	M90 - 100 - B - ... - TBM	100	3.94	245	9.65	145	5.71	1,37 x F0		1,65 x F0		-	-	0,17	0.37	✓
M90 - 125 - A - ... - TBM	M90 - 125 - B - ... - TBM	125	4.92	295	11.61	170	6.69	1,38 x F0		1,66 x F0		-	-	0,20	0.44	✓

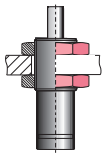

DM 24

HOW TO ORDER p. 39

INSTALLATION GUIDELINE p. 203

M 90 TEM
threaded

W-DX35-80-191 (Ford)

SPECIAL SPRINGS

Il nuovo codice sarà fornito solo ad esaurimento del vecchio - The new code will be supplied only when the old will be out of stock - Der neue Kode wird geliefert nur wenn der alte nicht mehr im Lager ist - Le nouveau code sera fourni uniquement lorsque le vieux stock sera ecoulé - El nuevo código será suministrado sólo cuando el viejo está fuera de stock - O novo código irá ser fornecido apenas quando o antigo esgotar stock

ACTIVE SAFETY

OSAS

USAS

OPAS

* $F1_i$ = Isothermal end force at 100% Cu p. 18

** $F1_p$ = Polytrophic end force at 100% Cu

Collegabile con tubi - Linkable with hoses
Anschlussfähig mit Leitungen
Connectable avec tubes - Connectable con tubos
Acompláveis com tubos

Micro 32°

Force color code	P bar	P psi	Fo Initial force ± 5% at +20°C +68°F daN	Fo lb
OR	10	145	5	11
PR	20	290	10	22
GR	60	870	30	67
BU	100	1450	50	112
RD	140	2030	70	157
YW	180	2610	90	202
BK	10-180	145-2610	5-90	11-202

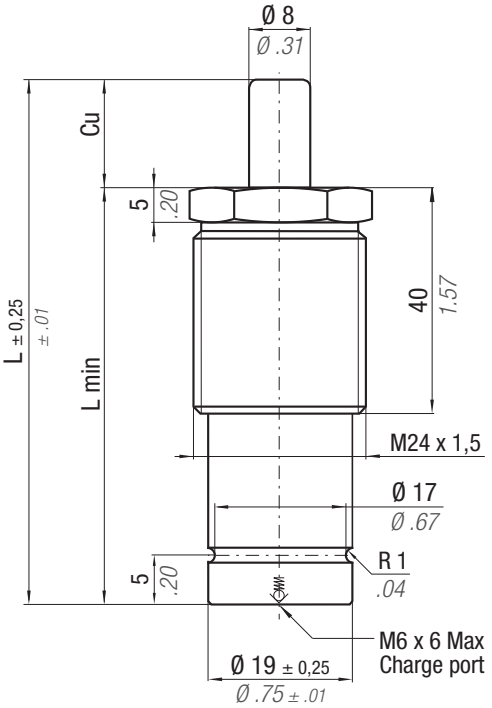

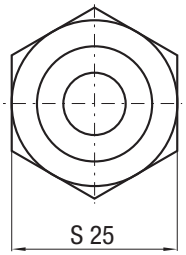

Senza riserva corsa
Without reserve of stroke
Ohne Hubreserve
Sans course de réserve
Sin margen de Carrera
Sem reserva de curso

NON superare 90% Cu
DO NOT exceed 90% Cu
NICHT überschreiten die 90% Cu
NE PAS dépasser 90% Cu
NO superar el 90% Cu
NÃO se excedam os 90% Cu

N2	°F 32 - 176	°C 0 - 80	ΔP ± 0,33 %/°C	P max 180 bar 2610 psi	P min 10 bar 145 psi	S 0,50 cm² 0.078 in²	SPM ~ 100 - 150 (at 20°C)	Max Speed 1,8 m/s	Maintenance kit Disposable

CODE PHASING OUT from 05/2019	NEW	Cu mm	Cu inch	L mm	L inch	L min mm	L min inch	$F1_i$ End force * daN	$F1_i$ lb	$F1_p$ End force ** daN	$F1_p$ lb	Vo cm³	Vo in³	~Kg	~lb	PED 2014/68/EU
M90-007-A-...-TEM	M90-007-B-...-TEM	7	0.28	56	2.20	49	1.93	1,21 x F0		1,39 x F0		-	-	0,07	0.15	✓
M90-010-A-...-TEM	M90-010-B-...-TEM	10	0.39	62	2.44	52	2.05	1,25 x F0		1,44 x F0		-	-	0,07	0.15	✓
M90-013-A-...-TEM	M90-013-B-...-TEM	12,7	0.50	67,4	2.65	54,7	2.15	1,27 x F0		1,48 x F0		-	-	0,08	0.18	✓
M90-015-A-...-TEM	M90-015-B-...-TEM	15	0.59	72	2.83	57	2.24	1,28 x F0		1,5 x F0		-	-	0,08	0.18	✓
M90-025-A-...-TEM	M90-025-B-...-TEM	25	0.98	92	3.62	67	2.64	1,32 x F0		1,57 x F0		-	-	0,09	0.20	✓
M90-038-A-...-TEM	M90-038-B-...-TEM	38,1	1.50	118,2	4.65	80,1	3.15	1,35 x F0		1,6 x F0		-	-	0,11	0.24	✓
M90-050-A-...-TEM	M90-050-B-...-TEM	50	1.97	142	5.59	92	3.62	1,36 x F0		1,62 x F0		-	-	0,12	0.26	✓
M90-063-A-...-TEM	M90-063-B-...-TEM	63,5	2.50	172	6.77	108,5	4.27	1,36 x F0		1,62 x F0		-	-	0,14	0.31	✓
M90-080-A-...-TEM	M90-080-B-...-TEM	80	3.15	205	8.07	125	4.92	1,37 x F0		1,64 x F0		-	-	0,15	0.33	✓
M90-100-A-...-TEM	M90-100-B-...-TEM	100	3.94	245	9.65	145	5.71	1,37 x F0		1,65 x F0		-	-	0,17	0.37	✓
M90-125-A-...-TEM	M90-125-B-...-TEM	125	4.92	295	11.61	170	6.69	1,38 x F0		1,66 x F0		-	-	0,20	0.44	✓

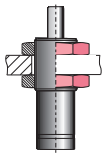

DM 24

HOW TO ORDER

p. 39

INSTALLATION GUIDELINE

p. 203

M 90 TBI
threaded

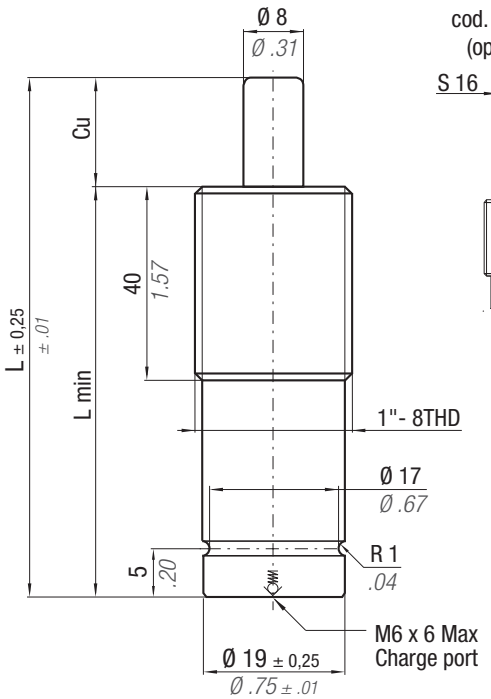

cod. 39 TBT
(optional)

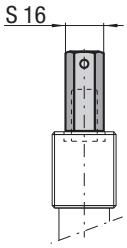

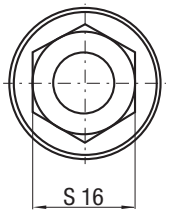

Senza riserva corsa
Without reserve of stroke
Ohne Hubreserve
Sans course de réserve
Sin margen de Carrera
Sem reserva de curso

NON superare 90% Cu
DO NOT exceed 90% Cu
NICHT überschreiten die 90% Cu
NE PAS dépasser 90% Cu
NO superar el 90% Cu
NÃO se excedam os 90% Cu

Il nuovo codice sarà fornito solo ad esaurimento del vecchio - The new code will be supplied only when the old will be out of stock - Der neue Kode wird geliefert nur wenn der alte nicht mehr im Lager ist - Le nouveau code sera fourni uniquement lorsque le vieux stock sera ecoulé - El nuevo código será suministrado sólo cuando el viejo está fuera de stock - O novo código irá ser fornecido apenas quando o antigo esgotar stock

*** $F1_i$ =** Isothermal end force at 100% Cu

p. 18

**** $F1_p$ =** Polytrophic end force at 100% Cu

Collegabile con tubi - Linkable with hoses
Anschlussfähig mit Leitungen
Connectable avec tubes - Connectable con tubos
Acompláveis com tubos

Micro 32°

Force color code	P bar	P psi	F0 Initial force ± 5% at +20°C +68°F daN	F0 lb
OR	10	145	5	11
PR	20	290	10	22
GR	60	870	30	67
BU	100	1450	50	112
RD	140	2030	70	157
YW	180	2610	90	202
BK	10-180	145-2610	5-90	11-202

ACTIVE SAFETY

OSAS

USAS

OPAS

M

N2	°F 32 - 176	°C 0 - 80	ΔP ± 0,33 %/°C	P max 180 bar 2610 psi	P min 10 bar 145 psi	S 0,50 cm² 0.078 in²	SPM ~ 100 - 150 (at 20°C)	Max Speed 1,8 m/s	Maintenance kit Disposable

CODE PHASING OUT from 05/2019	NEW	Cu mm	Cu inch	L mm	L inch	L min mm	L min inch	$F1_i$ * End force daN	$F1_i$ lb	$F1_p$ ** End force daN	$F1_p$ lb	V0 cm³	V0 in³	~Kg	~lb	PED 2014/68/EU
M90-007-A-...-TBI	M90-007-B-...-TBI	7	0.28	56	2.20	49	1.93	1,21 x F0		1,39 x F0		-	-	0,07	0.15	✓
M90-010-A-...-TBI	M90-010-B-...-TBI	10	0.39	62	2.44	52	2.05	1,25 x F0		1,44 x F0		-	-	0,07	0.15	✓
M90-013-A-...-TBI	M90-013-B-...-TBI	12,7	0.50	67,4	2.65	54,7	2.15	1,27 x F0		1,48 x F0		-	-	0,08	0.18	✓
M90-015-A-...-TBI	M90-015-B-...-TBI	15	0.59	72	2.83	57	2.24	1,28 x F0		1,5 x F0		-	-	0,08	0.18	✓
M90-025-A-...-TBI	M90-025-B-...-TBI	25	0.98	92	3.62	67	2.64	1,32 x F0		1,57 x F0		-	-	0,09	0.20	✓
M90-038-A-...-TBI	M90-038-B-...-TBI	38,1	1.50	118,2	4.65	80,1	3.15	1,35 x F0		1,6 x F0		-	-	0,11	0.24	✓
M90-050-A-...-TBI	M90-050-B-...-TBI	50	1.97	142	5.59	92	3.62	1,36 x F0		1,62 x F0		-	-	0,12	0.26	✓
M90-063-A-...-TBI	M90-063-B-...-TBI	63,5	2.50	172	6.77	108,5	4.27	1,36 x F0		1,62 x F0		-	-	0,14	0.31	✓
M90-080-A-...-TBI	M90-080-B-...-TBI	80	3.15	205	8.07	125	4.92	1,37 x F0		1,64 x F0		-	-	0,15	0.33	✓
M90-100-A-...-TBI	M90-100-B-...-TBI	100	3.94	245	9.65	145	5.71	1,37 x F0		1,65 x F0		-	-	0,17	0.37	✓
M90-125-A-...-TBI	M90-125-B-...-TBI	125	4.92	295	11.61	170	6.69	1,38 x F0		1,66 x F0		-	-	0,20	0.44	✓

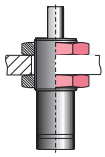

DI 1"- 8

HOW TO ORDER

p. 39

INSTALLATION GUIDELINE

p. 203

M 200

ISO 11901 - 1	VDI 3003 - Blatt 2	B2 4007 (BMW)	075.90.50 (FCA)
B8 3180 220 000 002(MB)	K32D2-2400-50 (Nissan)	E24.54.815.G (PSA)	39D 878 (VW)

SPECIAL SPRINGS

SW

ACTIVE SAFETY

OSAS

USAS

OPAS

Il nuovo codice sarà fornito solo ad esaurimento del vecchio - The new code will be supplied only when the old will be out of stock - Der neue Kode wird geliefert nur wenn der alte nicht mehr im Lager ist - Le nouveau code sera fourni uniquement lorsque le vieux stock sera ecoulé - El nuevo código será suministrado sólo cuando el viejo está fuera de stock - O novo código irá ser fornecido apenas quando o antigo esgotar stock

*** $F1_i$ =** Isothermal end force at 100% Cu p. 18

**** $F1_p$ =** Polytrophic end force at 100% Cu

Collegabile con tubi - Linkable with hoses
Anschlussfähig mit Leitungen
Connectable avec tubes - Connectable con tubos
Acompláveis com tubos

Micro 32°

Force color code	P bar	P psi	Fo Initial force ± 5% at +20°C +68°F daN	Fo lb
OR	15	218	17	38
PR	25	363	28	63
GR	45	653	50	112
BU	90	1305	100	225
RD	135	1958	150	337
YW	180	2610	200	450
BK	10-180	145-2610	11-200	25-450

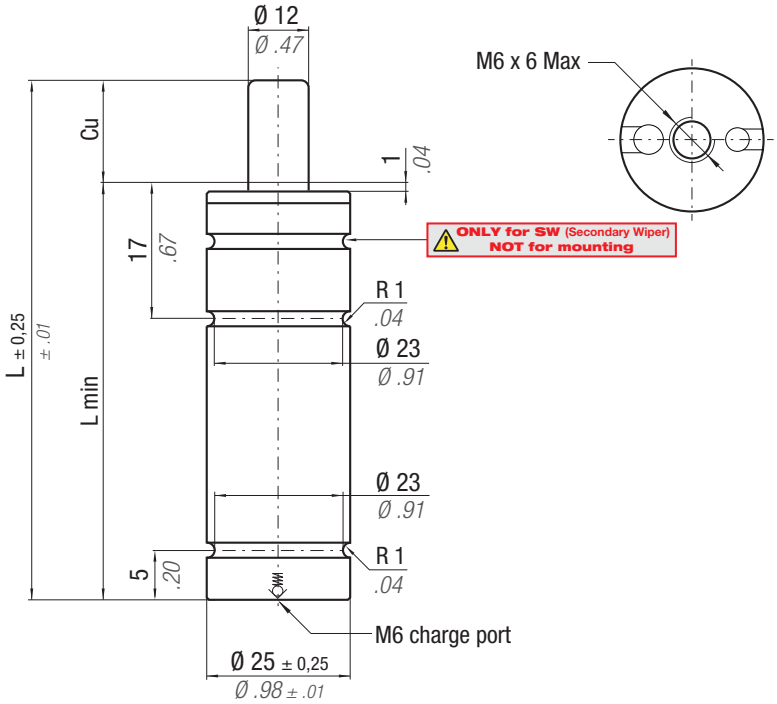

N_2	°F 32 - 176	°C 0 - 80	ΔP ± 0,33 %/°C	P max 180 bar 2610 psi	P min 10 bar 145 psi	S 1,13 cm² 0.175 in²	SPM ~ 50 - 80 (at 20°C)	Max Speed 1,8 m/s	Maintenance kit Disposable

CODE PHASING OUT from 05/2019	NEW	Cu mm	Cu inch	L mm	L inch	L min mm	L min inch	$F1_i$ * End force daN	$F1_i$ lb	$F1_p$ ** End force daN	$F1_p$ lb	Vo cm³	Vo in³	~Kg	~lb	PED 2014/68/EU
M200 - 007 - A -...	M200 - 007 - B - ...	7	0.28	56	2.20	49	1.93	1,30 x F0		1,50 x F0		-	-	0,12	0.26	✓
M200 - 010 - A -...	M200 - 010 - B - ...	10	0.39	62	2.44	52	2.05	1,34 x F0		1,57 x F0		-	-	0,13	0.29	✓
M200 - 013 - A -...	M200 - 013 - B - ...	12,7	0.50	67,4	2.65	54,7	2.15	1,37 x F0		1,62 x F0		-	-	0,13	0.29	✓
M200 - 015 - A -...	M200 - 015 - B - ...	15	0.59	72	2.83	57	2.24	1,38 x F0		1,64 x F0		-	-	0,14	0.31	✓
M200 - 016 - A -...	M200 - 016 - B - ...	16	0.63	74	2.91	58	2.28	1,39 x F0		1,65 x F0		-	-	0,14	0.31	✓
M200 - 025 - A -...	M200 - 025 - B - ...	25	0.98	92	3.62	67	2.64	1,43 x F0		1,72 x F0		-	-	0,16	0.35	✓
M200 - 038 - A -...	M200 - 038 - B - ...	38,1	1.50	118,2	4.65	80,1	3.15	1,46 x F0		1,77 x F0		-	-	0,19	0.42	✓
M200 - 050 - A -...	M200 - 050 - B - ...	50	1.97	142	5.59	92	3.62	1,47 x F0		1,79 x F0		-	-	0,20	0.44	✓
M200 - 063 - A -...	M200 - 063 - B - ...	63,5	2.50	172	6.77	108,5	4.27	1,48 x F0		1,81 x F0		-	-	0,23	0.51	✓
M200 - 080 - A -...	M200 - 080 - B - ...	80	3.15	205	8.07	125	4.92	1,49 x F0		1,83 x F0		-	-	0,26	0.57	✓
M200 - 100 - A -...	M200 - 100 - B - ...	100	3.94	245	9.65	145	5.71	1,50 x F0		1,83 x F0		-	-	0,30	0.66	✓
M200 - 125 - A -...	M200 - 125 - B - ...	125	4.92	295	11.61	170	6.69	1,50 x F0		1,84 x F0		-	-	0,34	0.75	✓

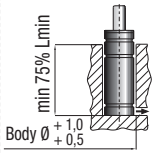

Drop-In

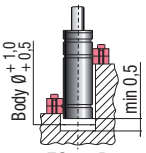

FC 25 B
FCC 25 A

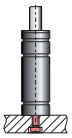

Bottom mount

HOW TO ORDER

p. 39

INSTALLATION GUIDELINE

p. 203

W-DX35-80-40 (Ford)			

M 300

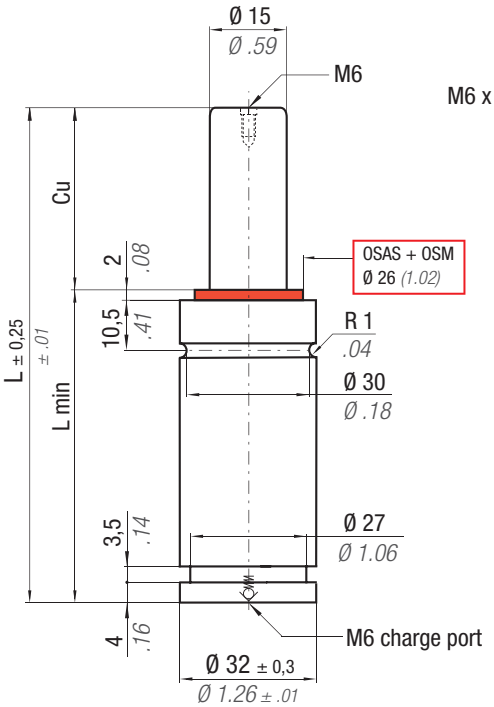

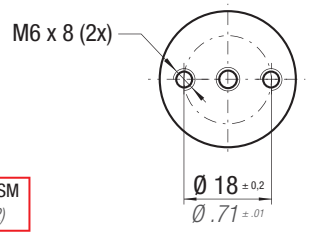

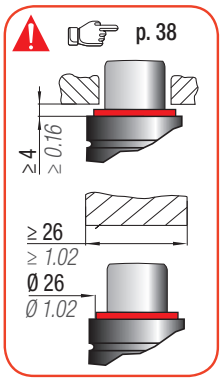

OSAS + OSM = OVER STROKE ACTIVE SAFETY + OVER STROKE MARKER

SW

ACTIVE SAFETY

OSAS

USAS

* $F1_i$ = Isothermal end force at 100% Cu p. 18

** $F1_p$ = Polytrophic end force at 100% Cu

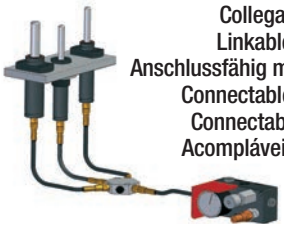

Collegabile con tubi
Linkable with hoses
Anschlussfähig mit Leitungen
Connectable avec tubes
Connectable con tubos
Acompláveis com tubos

Micro 32°

Force color code	P		F0 Initial force ± 5% at +20°C +68°F	
	bar	psi	daN	lb
GR	45	653	80	180
BU	90	1305	160	360
RD	135	1958	240	540
YW	180	2610	320	719
BK	10-180	145-2610	18-320	40-719

N2	°F 32 - 176	°C 0 ~ 80	ΔP	P max	P min	S	SPM	Max Speed	Maintenance kit
			± 0,33 %/°C	180 bar / 2610 psi	10 bar / 145 psi	1,77 cm² / 0.274 in²	~ 50 - 80 (at 20°C)	1,8 m/s	39BMMCI32A

CODE	Cu mm	Cu inch	L mm	L inch	L min mm	L min inch	$F1_i$ End force * daN	$F1_i$ lb	$F1_p$ End force ** daN	$F1_p$ lb	V0 cm³	V0 in³	~Kg	~lb	PED 2014/68/EU
M300 - 007 - A - …	7	0.28	56	2.20	49	1.93	1,17 x F0		1,30 x F0		-	-	0,21	0.01	✓
M300 - 010 - A - …	10	0.39	62	2.44	52	2.05	1,21 x F0		1,37 x F0		-	-	0,22	0.01	✓
M300 - 013 - A - …	12,7	0.50	67,4	2.65	54,7	2.15	1,24 x F0		1,41 x F0		-	-	0,23	0.01	✓
M300 - 015 - A - …	15	0.59	72	2.83	57	2.24	1,26 x F0		1,44 x F0		-	-	0,24	0.01	✓
M300 - 025 - A - …	25	0.98	92	3.62	67	2.64	1,32 x F0		1,53 x F0		-	-	0,26	0.01	✓
M300 - 038 - A - …	38	1.50	118	4.65	80	3.15	1,36 x F0		1,60 x F0		-	-	0,30	0.01	✓
M300 - 050 - A - …	50	1.97	142	5.59	92	3.62	1,38 x F0		1,64 x F0		-	-	0,34	0.01	✓
M300 - 063 - A - …	63,5	2.50	172	6.77	108,5	4.27	1,38 x F0		1,63 x F0		-	-	0,39	0.02	✓
M300 - 080 - A - …	80	3.15	205	8.07	125	4.92	1,40 x F0		1,66 x F0		-	-	0,44	0.02	✓
M300 - 100 - A - …	100	3.94	245	9.65	145	5.71	1,41 x F0		1,68 x F0		-	-	0,50	0.02	✓
M300 - 125 - A - …	125	4.92	295	11.61	170	6.69	1,42 x F0		1,70 x F0		-	-	0,57	0.02	✓

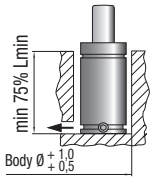

Drop-in

Bottom mount

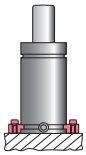

FS2A 32
FS2B 32

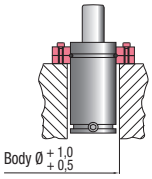

FC 32 A
FCQC 32

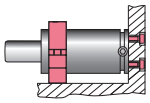

FSA 32 - FSD 32
FSB 32

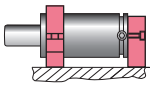

FSB 32 + R 32 A

HOW TO ORDER p. 39

INSTALLATION GUIDELINE p. 203

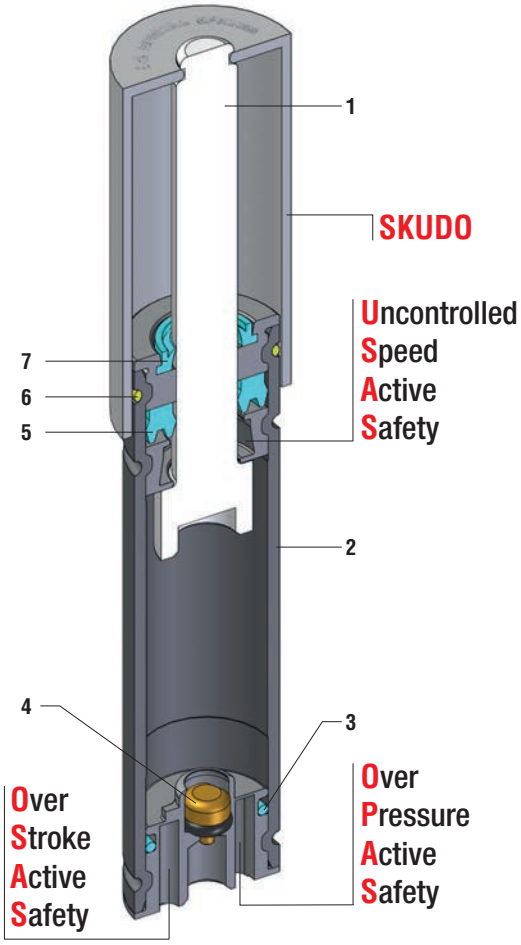

MS 90

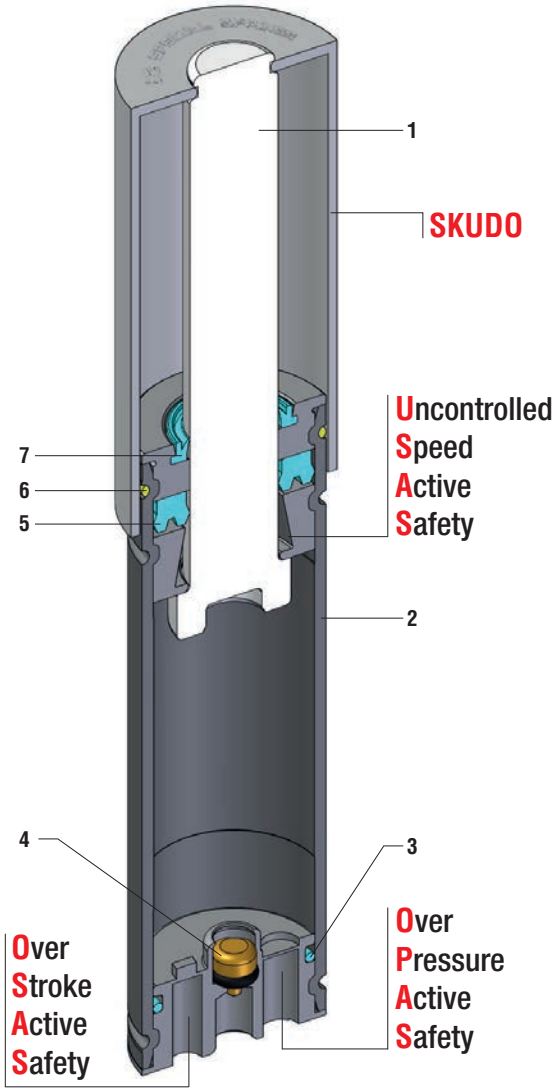

MS 200

Mini cilindri - Mini cylinders - Mini Gasdruckfedern
Mini-ressorts - Mini cilindros - Mini-cilindros

SEALING	ROD SEAL
DESIGN	RETAINING GROOVE DESIGN

1	Rod (nitrited superfinished)	**5**	Rod seal
2	Body	**6**	Force color code
3	O-ring	**7**	Rod wiper
4	Valve		

RANGE CHART

Model	Body Ø		Stroke Cu		Initial force F0		OSAS	USAS	OPAS	SKUDO
	mm	*inch*	mm	*inch*	daN	*lb*				
MS 90	19	*0.75*	7 - 122	*0.28 - 4.80*	5 - 90	*11 - 202*	✓	✓	✓	✓
MS 200	25	*0.98*	7 - 122	*0.28 - 4.80*	17 - 200	*38 - 450*	✓	✓	✓	✓

HOW TO ORDER

Series

Revision code

Model

MS 90-022-B-YW

Stroke

Force color code

Available versions

MS 90-022-B-YW

Standard code

Self contained

MS 90

SPECIAL SPRINGS

Il nuovo codice sarà fornito solo ad esaurimento del vecchio - The new code will be supplied only when the old will be out of stock - Der neue Kode wird geliefert nur wenn der alte nicht mehr im Lager ist - Le nouveau code sera fourni uniquement lorsque le vieux stock sera ecoulé - El nuevo código será suministrado sólo cuando el viejo está fuera de stock - O novo código irá ser fornecido apenas quando o antigo esgotar stock

ACTIVE SAFETY

OPAS

SKUDO

*** $F1_i$ =** Isothermal end force at 100% Cu p. 18

**** $F1_p$ =** Polytrophic end force at 100% Cu

Force color code	P bar	P psi	Fo Initial force ± 5% at +20°C +68°F daN	Fo lb
OR	10	145	5	11
PR	20	290	10	22
GR	60	870	30	67
BU	100	1450	50	112
RD	140	2030	70	157
YW	180	2610	90	202
BK	10-180	145-2610	5-90	11-202

NOT FOR

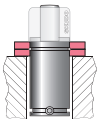

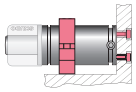

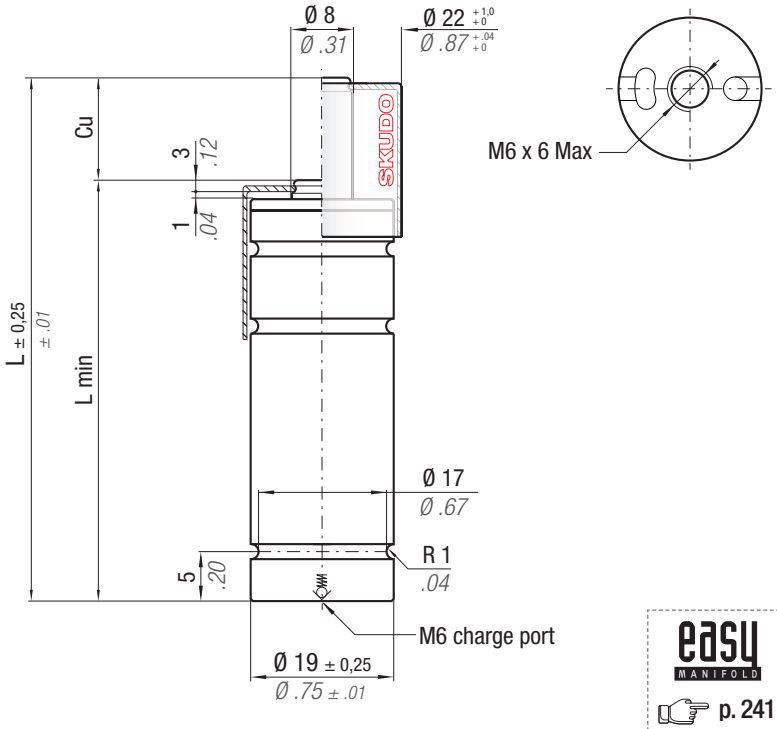

easy MANIFOLD p. 241

N_2	°F 32 - 176	°C 0 - 80	ΔP ± 0,33 %/°C	P max 180 bar 2610 psi	P min 10 bar 145 psi	S 0,50 cm² 0.078 in²	SPM ~ 100 - 150 (at 20°C)	Max Speed 1,8 m/s	Maintenance kit Disposable

CODE PHASING OUT from 05/2019	NEW	Cu mm	Cu inch	L mm	L inch	L min mm	L min inch	$F1_i$ * End force daN	$F1_i$ lb	$F1_p$ ** End force daN	$F1_p$ lb	Vo cm³	Vo in³	~Kg	~lb	PED 2014/68/EU
MS90 - 007 - A -...	MS90 - 007 - B - ...	7	0.28	62	2.44	55	2.17	1,19 x F0		1,35 x F0		-	-	0,07	0.15	✓
MS90 - 010 - A -...	MS90 - 010 - B - ...	9,7	0.38	67,4	2.65	57,7	2.27	1,22 x F0		1,40 x F0		-	-	0,08	0.18	✓
MS90 - 012 - A -...	MS90 - 012 - B - ...	12	0.47	72	2.83	60	2.36	1,24 x F0		1,44 x F0		-	-	0,08	0.18	✓
MS90 - 022 - A -...	MS90 - 022 - B - ...	22	0.87	92	3.62	70	2.76	1,30 x F0		1,52 x F0		-	-	0,09	0.20	✓
MS90 - 035 - A -...	MS90 - 035 - B - ...	35,1	1.38	118,2	4.65	83,1	3.27	1,33 x F0		1,57 x F0		-	-	0,11	0.24	✓
MS90 - 047 - A -...	MS90 - 047 - B - ...	47	1.85	142	5.59	95	3.74	1,34 x F0		1,60 x F0		-	-	0,12	0.26	✓
MS90 - 060 - A -...	MS90 - 060 - B - ...	60,5	2.38	172	6.77	111,5	4.39	1,35 x F0		1,61 x F0		-	-	0,14	0.31	✓
MS90 - 077 - A -...	MS90 - 077 - B - ...	77	3.03	205	8.07	128	5.04	1,36 x F0		1,62 x F0		-	-	0,15	0.33	✓
MS90 - 097 - A -...	MS90 - 097 - B - ...	97	3.82	245	9.65	148	5.83	1,37 x F0		1,64 x F0		-	-	0,17	0.37	✓
MS90 - 122 - A -...	MS90 - 122 - B - ...	122	4.80	295	11.61	173	6.81	1,37 x F0		1,65 x F0		-	-	0,20	0.44	✓

WARNING
REMOVE SKUDO

Upside down mounting

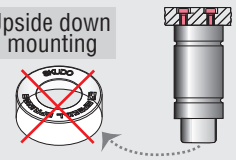

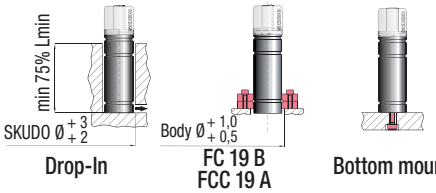

Drop-In — FC 19 B, FCC 19 A — Bottom mount

HOW TO ORDER p. 53

INSTALLATION GUIDELINE p. 203

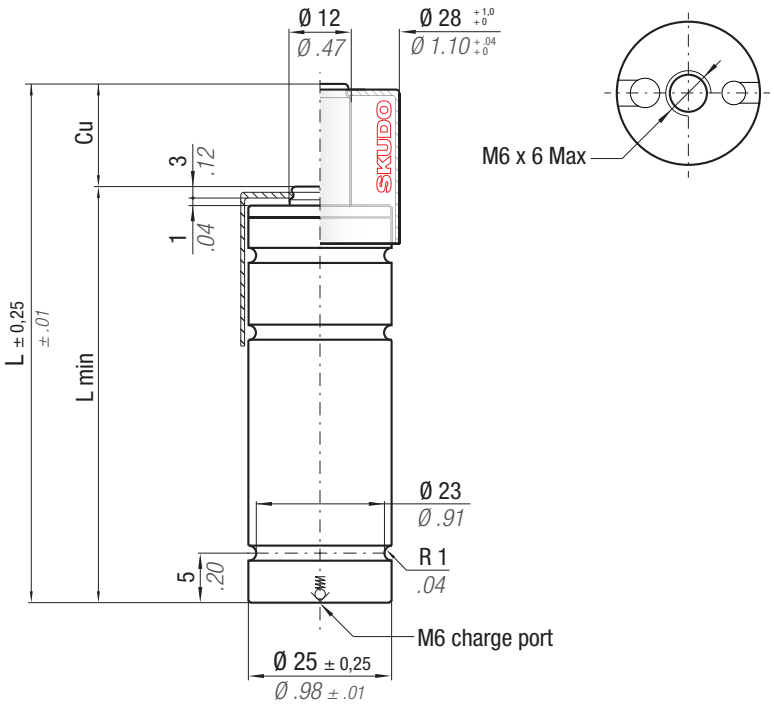

Il nuovo codice sarà fornito solo ad esaurimento del vecchio - The new code will be supplied only when the old will be out of stock - Der neue Kode wird geliefert nur wenn der alte nicht mehr im Lager ist - Le nouveau code sera fourni uniquement lorsque le vieux stock sera ecoulé - El nuevo código será suministrado sólo cuando el viejo está fuera de stock - O novo código irá ser fornecido apenas quando o antigo esgotar stock

*** $F1_i$ =** Isothermal end force at 100% Cu p. 18

**** $F1_p$ =** Polytrophic end force at 100% Cu

Force color code	P bar	P psi	F0 daN	F0 lb
			Initial force ± 5% at +20°C +68°F	
OR	15	218	17	38
PR	25	363	28	63
GR	45	653	50	112
BU	90	1305	100	225
RD	135	1958	150	337
YW	180	2610	200	450
BK	10-180	145-2610	11-200	25-450

NOT FOR

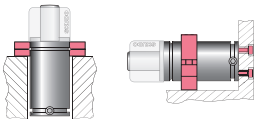

ACTIVE SAFETY

OSAS

USAS

OPAS

SKUDO

MS

N2	°F 32 - 176	°C 0 - 80	ΔP ± 0,33 %/°C	P max 180 bar 2610 psi	P min 10 bar 145 psi	S 1,13 cm² 0.175 in²	SPM ~ 50 - 80 (at 20°C)	Max Speed 1,8 m/s	Maintenance kit Disposable

CODE PHASING OUT from 05/2019	NEW	Cu mm	Cu inch	L mm	L inch	L min mm	L min inch	$F1_i$ * End force daN	$F1_i$ lb	$F1_p$ ** End force daN	$F1_p$ lb	V0 cm³	V0 in³	~Kg	~lb	PED 2014/68/EU
MS200 - 007 - A -...	MS200 - 007 - B -...	7	0.28	62	2.44	55	2.17	1,25 x F0		1,43 x F0		-	-	0,13	0.29	✓
MS200 - 010 - A -...	MS200 - 010 - B -...	9,7	0.38	67,4	2.65	57,7	2.27	1,30 x F0		1,50 x F0		-	-	0,13	0.29	✓
MS200 - 012 - A -...	MS200 - 012 - B -...	12	0.47	72	2.83	60	2.36	1,32 x F0		1,54 x F0		-	-	0,14	0.31	✓
MS200 - 022 - A -...	MS200 - 022 - B -...	22	0.87	92	3.62	70	2.76	1,39 x F0		1,65 x F0		-	-	0,16	0.35	✓
MS200 - 035 - A -...	MS200 - 035 - B -...	35,1	1.38	118,2	4.65	83,1	3.27	1,43 x F0		1,72 x F0		-	-	0,19	0.42	✓
MS200 - 047 - A -...	MS200 - 047 - B -...	47	1.85	142	5.59	95	3.74	1,45 x F0		1,75 x F0		-	-	0,20	0.44	✓
MS200 - 060 - A -...	MS200 - 060 - B -...	60,5	2.38	172	6.77	111,5	4.39	1,46 x F0		1,78 x F0		-	-	0,23	0.51	✓
MS200 - 077 - A -...	MS200 - 077 - B -...	77	3.03	205	8.07	128	5.04	1,47 x F0		1,80 x F0		-	-	0,26	0.57	✓
MS200 - 097 - A -...	MS200 - 097 - B -...	97	3.82	245	9.65	148	5.83	1,48 x F0		1,81 x F0		-	-	0,30	0.66	✓
MS200 - 122 - A -...	MS200 - 122 - B -...	122	4.80	295	11.61	173	6.81	1,49 x F0		1,82 x F0		-	-	0,34	0.75	✓

WARNING
REMOVE SKUDO

Upside down mounting

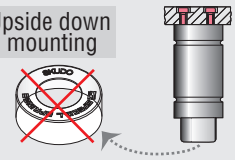

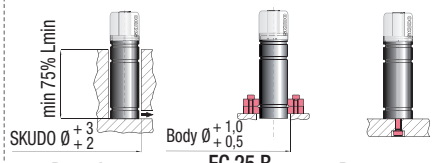

Drop-In

FC 25 B
FCC 25 A

Bottom mount

HOW TO ORDER p. 53

INSTALLATION GUIDELINE p. 203

ISO	VDI	BMW	FCA
Ford	Mazda	MB	Nissan
PSA	Renault	VW	

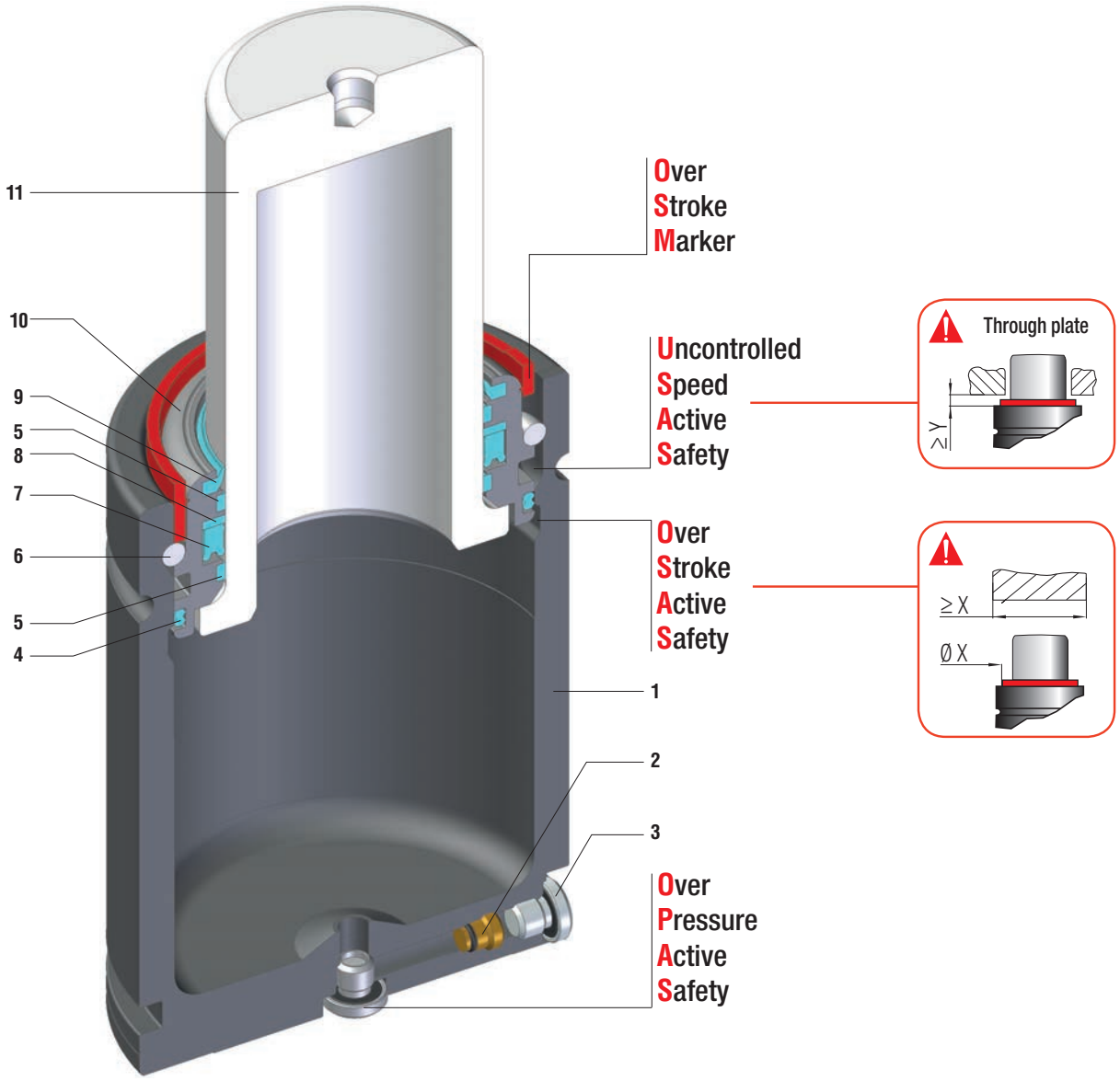

Minima altezza, massima forza - Minimum height, maximum force - Minimale Höhe, maximale Kraft
Hauteur minimale, force maximale - Mínima altura, máxima fuerza - Altura mínima, força máxima

SEALING	ROD SEAL
DESIGN	BUSH - BODY DESIGN

1	Body	**5**	Guide ring	**9**	Rod wiper
2	Valve	**6**	Retaining ring	**10**	Bush
3	Plug	**7**	Rod seal	**11**	Rod (nitrited superfinished)
4	Dual ring seal	**8**	Back-up ring		

RANGE CHART

Model	Body Ø		Stroke Cu		Initial force F0		OSAS	USAS	OPAS	SKUDO	SW
	mm	*inch*	mm	*inch*	daN	*lb*					
RV 170	19	*0.75*	7 - 125	*0.28 - 4.92*	170	*382*	✓	✓	✓	-	✓
RV 320	25	*0.98*	7 - 125	*0.28 - 4.92*	320	*719*	✓	✓	✓	-	✓
RV 350	32	*1.26*	10 - 125	*0.39 - 4.92*	360	*809*	✓	✓	✓	-	✓
RV 500	38	*1.50*	10 - 125	*0.39 - 4.92*	470	*1057*	✓	✓	✓	-	✓
RV 750	45	*1.77*	10 - 125	*0.39 - 4.92*	740	*1664*	✓	✓	✓	-	✓
RV 1000	50	*1.97*	10 - 125	*0.39 - 4.92*	920	*2068*	✓	✓	✓	-	✓
RV 1200	50	*1.97*	10 - 125	*0.39 - 4.92*	1060	*2383*	✓	✓	✓	-	✓
RV 1500	63	*2.48*	10 - 125	*0.39 - 4.92*	1530	*3440*	✓	✓	✓	-	✓
RV 2400	75	*2.95*	10 - 125	*0.39 - 4.92*	2385	*5362*	✓	✓	✓	-	✓
RV 4200	95	*3.74*	16 - 125	*0.63 - 4.92*	4240	*9532*	✓	✓	✓	-	✓
RV 6600	120	*4.72*	16 - 125	*0.63 - 4.92*	6630	*14905*	✓	✓	✓	-	✓
RV 9500	150	*5.91*	19 - 125	*0.75 - 4.92*	9540	*21447*	✓	✓	✓	-	✓
RV 12000	150	*5.91*	19 - 125	*0.75 - 4.92*	11780	*26470*	✓	✓	✓	-	✓
RV 20000	195	*7.68*	19 - 125	*0.75 - 4.92*	19910	*44738*	✓	✓	✓	-	✓

✓ Built-in as standard ✓ Optional upon request

RV

HOW TO ORDER

Series — Revision code

Model

RV 2400-050-A-E-W

Stroke — Version

Available versions

RV 2400-050-A

Standard code

Self contained

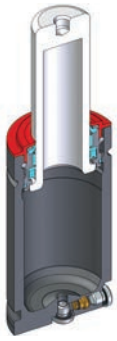

RV 2400-050-A-W

Add "-W" to standard code

Self contained

+

Secondary wiper

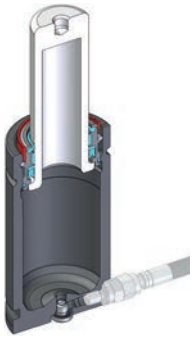

RV 2400-050-A-N

Add "-N" to standard code

Linkable

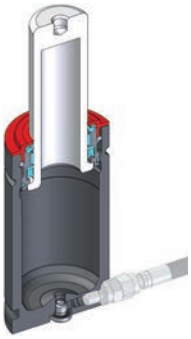

RV 2400-050-A-N-W

Add "-N-W" to standard code

Linkable

+

Secondary wiper

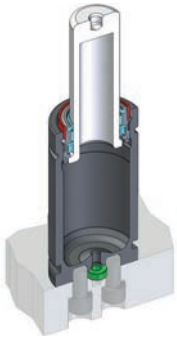

RV 2400-050-A-E

Add "-E" to standard code

Easy Manifold

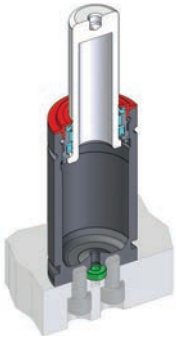

RV 2400-050-A-E-W

Add "-E-W" to standard code

Easy Manifold

+

Secondary wiper

RV 170

ISO 11901 - 3	VDI 3003 - Blatt 3	B2 4005 (BMW)	075.90.60 (FCA)
B8 3180 220 000 004(MB)	39D 997 (VW)		

SPECIAL SPRINGS

SW

ACTIVE SAFETY

OSAS

USAS

OPAS

Il nuovo codice sarà fornito solo ad esaurimento del vecchio - The new code will be supplied only when the old will be out of stock - Der neue Kode wird geliefert nur wenn der alte nicht mehr im Lager ist - Le nouveau code sera fourni uniquement lorsque le vieux stock sera ecoulé - El nuevo código será suministrado sólo cuando el viejo está fuera de stock - O novo código irá ser fornecido apenas quando o antigo esgotar stock

easy MANIFOLD p. 241

* $F1_i$ = Isothermal end force at 100% Cu p. 18

** $F1_p$ = Polytrophic end force at 100% Cu

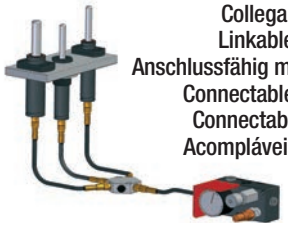

Collegabile con tubi
Linkable with hoses
Anschlussfähig mit Leitungen
Connectable avec tubes
Connectable con tubos
Acompláveis com tubos

Micro 32°

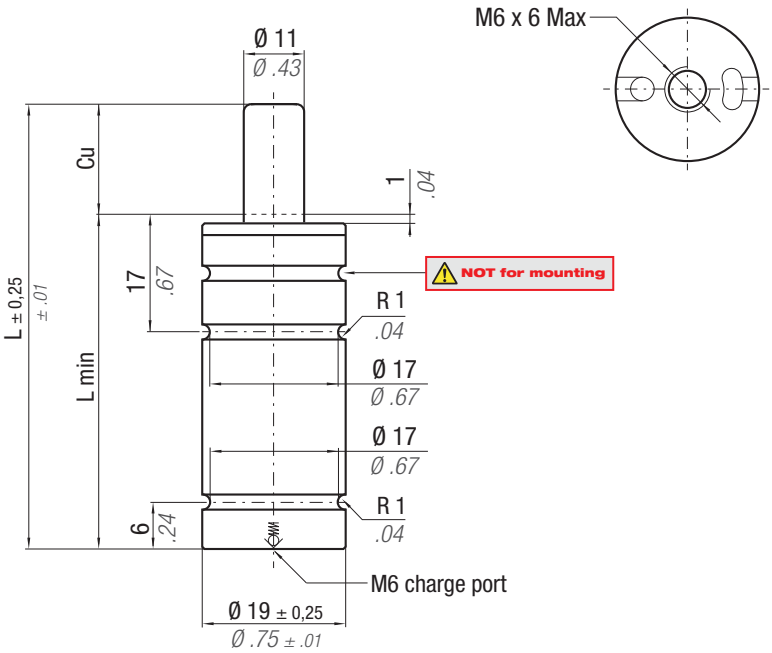

N_2	°F 32 - 176 / °C 0 - 80	ΔP	P max	P min	S	SPM	Max Speed	Maintenance kit
		± 0,33 %/°C	180 bar *2610 psi*	20 bar *290 psi*	0,95 cm² *0.147 in²*	~ 40 - 100 (at 20°C)	1,8 m/s	Disposable

CODE PHASING OUT from 05/2019	NEW	Cu mm	Cu inch	L mm	L inch	L min mm	L min inch	F0 Initial force daN	F0 lb	$F1_i$ * End force daN	$F1_i$ lb	$F1_p$ ** End force daN	$F1_p$ lb	V0 cm³	V0 in³	~Kg	~lb	PED 2014/68/EU
RV 170 - 007 - B	RV 170 - 007 - C	7	0.28	44	1.73	37	1.46			274	616	320	719	2,0	0.12	0,06	0.13	✓
RV 170 - 010 - B	RV 170 - 010 - C	10	0.39	50	1.97	40	1.57			285	641	337	758	3,0	0.18	0,06	0.13	✓
RV 170 - 013 - B	RV 170 - 013 - C	13	0.51	56	2.20	43	1.69			292	656	348	782	4,0	0.24	0,07	0.15	✓
RV 170 - 015 - B	RV 170 - 015 - C	15	0.59	60	2.36	45	1.77			296	665	353	794	4,0	0.24	0,07	0.15	✓
RV 170 - 019 - B	RV 170 - 019 - C	19	0.75	68	2.68	49	1.93	170 ± 5%	382	301	677	361	812	5,0	0.31	0,07	0.16	✓
RV 170 - 025 - B	RV 170 - 025 - C	25	0.98	80	3.15	55	2.17			306	688	369	830	7,0	0.43	0,08	0.17	✓
RV 170 - 032 - B	RV 170 - 032 - C	32	1.26	94	3.7	62	2.44	180 bar *2610psi*		310	697	374	841	8,0	0.49	0,09	0.19	✓
RV 170 - 038 - B	RV 170 - 038 - C	38	1.5	106	4.17	68	2.68			312	701	378	850	10,0	0.61	0,09	0.20	✓
RV 170 - 050 - B	RV 170 - 050 - C	50	1.97	130	5.12	80	3.15			315	708	382	859	13,0	0.79	0,11	0.23	✓
RV 170 - 063 - B	RV 170 - 063 - C	63	2.48	156	6.14	93	3.66	+ 20 °C	+68 °F	317	713	385	866	16,0	0.98	0,12	0.26	✓
RV 170 - 075 - B	RV 170 - 075 - C	75	2.95	185	7.28	110	4.33			318	715	387	870	19,0	1.16	0,14	0.30	✓
RV 170 - 080 - B	RV 170 - 080 - C	80	3.15	195	7.68	115	4.53			319	717	388	872	21,0	1.28	0,14	0.31	✓
RV 170 - 100 - B	RV 170 - 100 - C	100	3.94	235	9.25	135	5.31			320	719	390	877	25,0	1.55	0,16	0.36	✓
RV 170 - 125 - B	RV 170 - 125 - C	125	4.92	285	11.22	160	6.3			321	722	391	879	31,0	1.91	0,19	0.42	✓

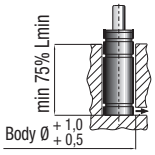

Drop-in

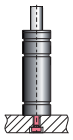

Bottom mount

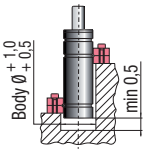

FC 19 B
FCC 19 A

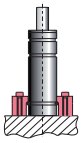

FS3 19

HOW TO ORDER p. 57

INSTALLATION GUIDELINE p. 203

RV 320

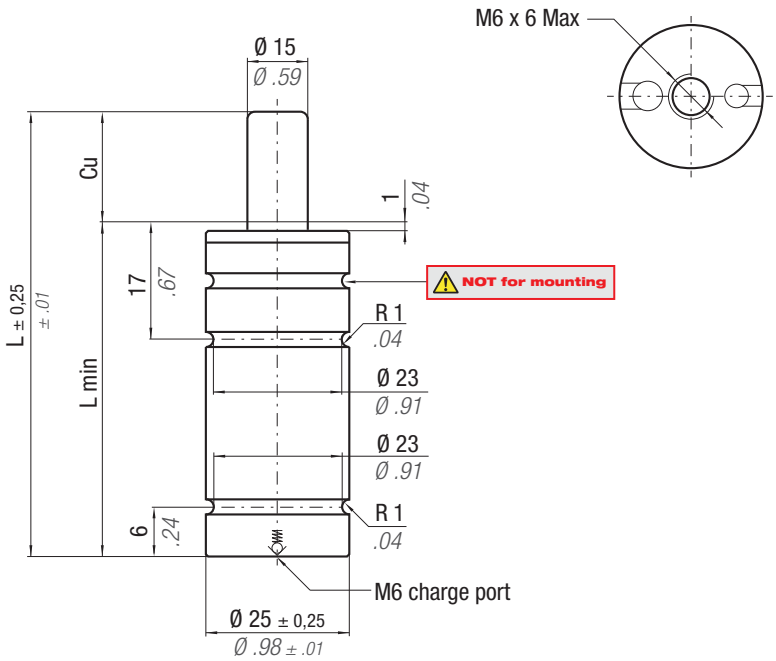

Il nuovo codice sarà fornito solo ad esaurimento del vecchio

The new code will be supplied only when the old will be out of stock

Der neue Kode wird geliefert nur wenn der alte nicht mehr im Lager ist

Le nouveau code sera fourni uniquement lorsque le vieux stock sera ecoulé

El nuevo código será suministrado sólo cuando el viejo está fuera de stock

O novo código irá ser fornecido apenas quando o antigo esgotar stock

*** $F1_i$ =** Isothermal end force at 100% Cu

p. 18

**** $F1_p$ =** Polytrophic end force at 100% Cu

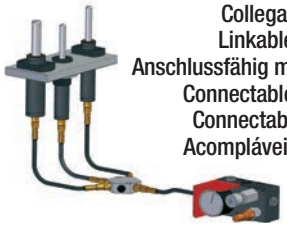

Collegabile con tubi
Linkable with hoses
Anschlussfähig mit Leitungen
Connectable avec tubes
Connectable con tubos
Acompláveis com tubos

Micro 32°

SW

ACTIVE SAFETY

OSAS

USAS

OPAS

RV

N2	°F 32 - 176 / °C 0 - 80	ΔP	P max	P min	S	SPM	Max Speed	Maintenance kit
		± 0,33 %/°C	180 bar *2610 psi*	20 bar *290 psi*	1,77 cm² *0.27 in²*	~ 40 - 100 (at 20°C)	1,8 m/s	Disposable

CODE PHASING OUT from 01/2020	NEW	Cu mm	Cu inch	L mm	L inch	L min mm	L min inch	F0 Initial force daN	F0 lb	$F1_i$ * End force daN	$F1_i$ lb	$F1_p$ ** End force daN	$F1_p$ lb	V0 cm³	V0 in³	~Kg	~lb	PED 2014/68/EU
RV 320 - 007 - B	RV 320 - 007 - C	7	0.28	44	1.73	37	1.46			467	1050	535	1203	5,0	0.31	0,10	0.22	✓
RV 320 - 010 - B	RV 320 - 010 - C	10	0.39	50	1.97	40	1.57			491	1104	569	1279	6,0	0.37	0,10	0.23	✓
RV 320 - 013 - B	RV 320 - 013 - C	13	0.51	56	2.20	43	1.69			508	1142	593	1333	7,0	0.43	0,11	0.24	✓
RV 320 - 015 - B	RV 320 - 015 - C	15	0.59	60	2.36	45	1.77			516	1160	606	1362	8,0	0.49	0,11	0.24	✓
RV 320 - 019 - B	RV 320 - 019 - C	19	0.75	68	2.68	49	1.93	320	719	529	1189	624	1403	10,0	0.61	0,12	0.26	✓
RV 320 - 025 - B	RV 320 - 025 - C	25	0.98	80	3.15	55	2.17	± 5%		542	1218	643	1446	13,0	0.79	0,13	0.28	✓
RV 320 - 032 - B	RV 320 - 032 - C	32	1.26	94	3.70	62	2.44			551	1239	658	1479	16,0	0.98	0,14	0.31	✓
RV 320 - 038 - B	RV 320 - 038 - C	38	1.50	106	4.17	68	2.68	180 bar *2610psi*		557	1252	667	1499	19,0	1.16	0,15	0.33	✓
RV 320 - 050 - B	RV 320 - 050 - C	50	1.97	130	5.12	80	3.15			565	1270	679	1526	24,0	1.46	0,17	0.37	✓
RV 320 - 063 - B	RV 320 - 063 - C	63	2.48	156	6.14	93	3.66	+ 20 °C	+68 °F	571	1284	687	1544	30,0	1.83	0,19	0.42	✓
RV 320 - 075 - B	RV 320 - 075 - C	75	2.95	185	7.28	110	4.33			567	1275	681	1531	36,0	2.20	0,22	0.48	✓
RV 320 - 080 - B	RV 320 - 080 - C	80	3.15	195	7.68	115	4.53			568	1277	683	1535	38,0	2.32	0,23	0.50	✓
RV 320 - 100 - B	RV 320 - 100 - C	100	3.94	235	9.25	135	5.31			573	1288	691	1553	47,0	2.87	0,26	0.57	✓
RV 320 - 125 - B	RV 320 - 125 - C	125	4.92	285	11.22	160	6.30			577	1297	697	1567	59,0	3.60	0,30	0.66	✓

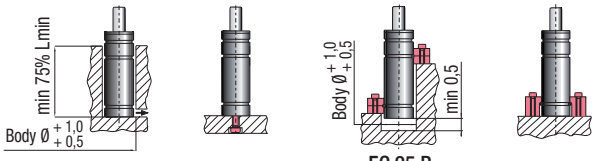

Drop-in | Bottom mount | FC 25 B FCC 25 A | FS3 25

HOW TO ORDER

p. 57

INSTALLATION GUIDELINE

p. 203

RV 350

ISO 11901 - 3	VDI 3003 - Blatt 3	B2 4005 (BMW)	075.90.60 (FCA)
W-DX35-6204 (Ford)	B8 3180 220 000 004(MB)	39D 997 (VW)	

SPECIAL SPRINGS

SW

OSAS + OSM = OVER STROKE ACTIVE SAFETY + OVER STROKE MARKER

ACTIVE SAFETY

easy MANIFOLD p. 241

OSAS

USAS

OPAS

* $F1_i$ = Isothermal end force at 100% Cu p. 18

** $F1_p$ = Polytrophic end force at 100% Cu

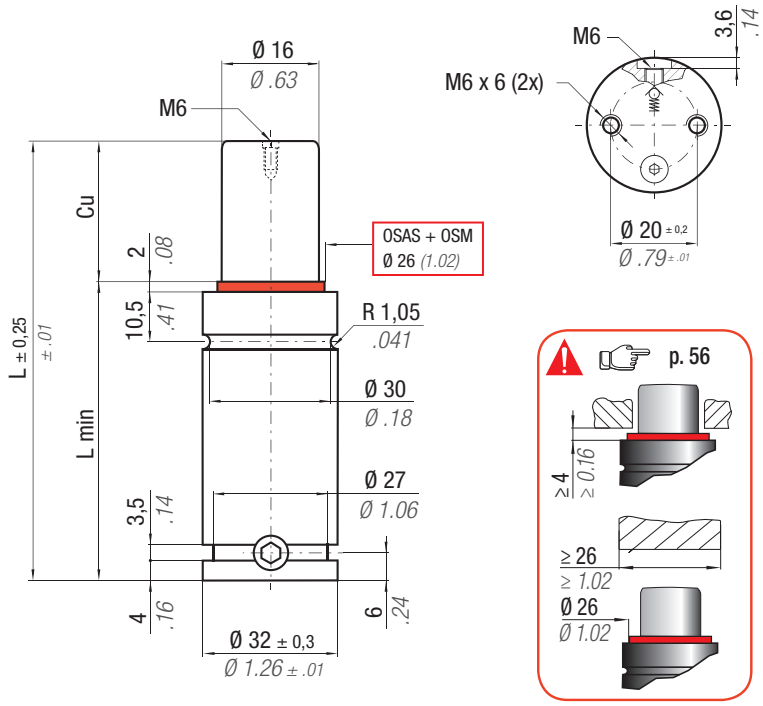

N_2	°F 32 - 176	°C 0 - 80	ΔP	P max	P min	S	SPM	Max Speed	Maintenance kit
			± 0,33 %/°C	180 bar *2610 psi*	20 bar *290 psi*	2,01 cm² *0.312 in²*	~ 20 - 100 (at 20°C)	1,8 m/s	39BMRV00350C

CODE	Cu mm	Cu inch	L mm	L inch	L min mm	L min inch	Fo Initial force daN	Fo lb	$F1_i$ * End force daN	$F1_i$ lb	$F1_p$ ** End force daN	$F1_p$ lb	Vo cm³	Vo in³	~Kg	~lb	PED 2014/68/EU
RV 350 - 010 - A	10	0.39	50	1.97	40	1.57	360 ± 5%	809	524	1179	598	1345	8,0	0.49	0,17	0.36	✓
RV 350 - 013 - A	13	0.51	56	2.20	43	1.69			538	1209	617	1388	10,0	0.61	0,18	0.39	✓
RV 350 - 016 - A	16	0.63	62	2.44	46	1.81			547	1231	631	1419	12,0	0.73	0,19	0.41	✓
RV 350 - 019 - A	19	0.75	68	2.68	49	1.93			555	1247	642	1442	13,0	0.79	0,19	0.43	✓
RV 350 - 025 - A	25	0.98	80	3.15	55	2.17			565	1269	656	1475	17,0	1.04	0,21	0.47	✓
RV 350 - 032 - A	32	1.26	94	3.70	62	2.44			572	1286	667	1500	21,0	1.28	0,24	0.52	✓
RV 350 - 038 - A	38	1.50	106	4.17	68	2.68	180 bar *2610psi*		577	1297	674	1515	25,0	1.53	0,26	0.56	✓
RV 350 - 050 - A	50	1.97	130	5.12	80	3.15			583	1310	683	1535	32,0	1.95	0,30	0.65	✓
RV 350 - 063 - A	63	2.48	156	6.14	93	3.66			587	1320	689	1549	40,0	2.44	0,34	0.74	✓
RV 350 - 075 - A	75	2.95	180	7.09	105	4.13	+ 20 °C *+68 °F*		590	1326	693	1557	47,0	2.87	0,38	0.83	✓
RV 350 - 080 - A	80	3.15	190	7.48	110	4.33			591	1328	694	1560	50,0	3.05	0,39	0.86	✓
RV 350 - 100 - A	100	3.94	230	9.06	130	5.12			593	1334	698	1569	62,0	3.78	0,46	1.01	✓
RV 350 - 125 - A	125	4.92	280	11.02	155	6.10			595	1338	701	1576	77,0	4.70	0,54	1.18	✓

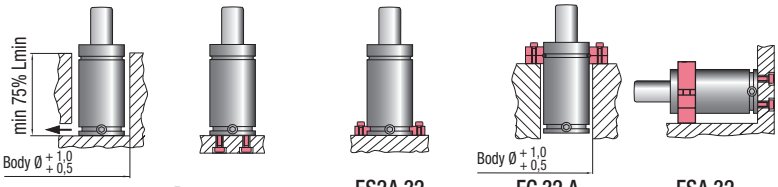

Drop-in | Bottom mount | FS2A 32 FS2B 32 | FC 32 A FCQC 32 | FSA 32 FSD 32

HOW TO ORDER p. 57

INSTALLATION GUIDELINE p. 203

ISO 11901 - 3	VDI 3003 - Blatt 3	B2 4005 (BMW)	075.90.60 (FCA)
W-DX35-6204 (Ford)	B8 3180 220 000 004(MB)	K 32 H (Nissan)	E24.54.815.G (PSA)
EM24.54.700 (Renault)	39D 997 (VW)		

RV 500

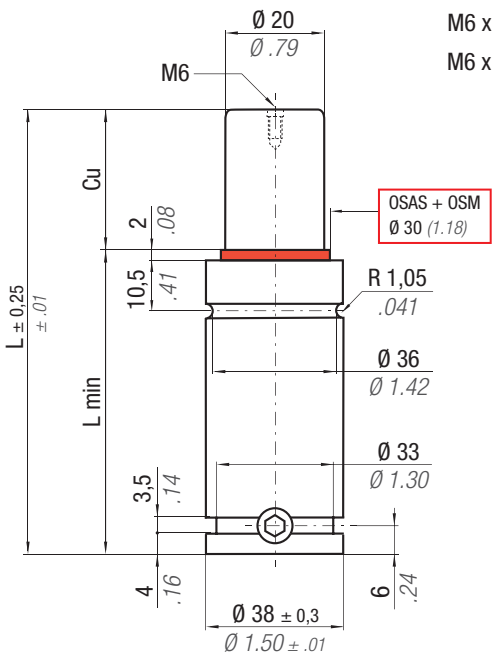

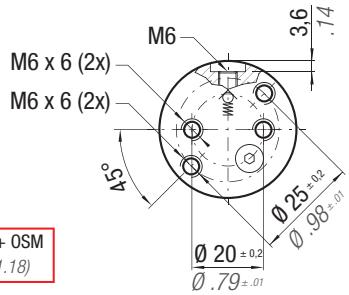

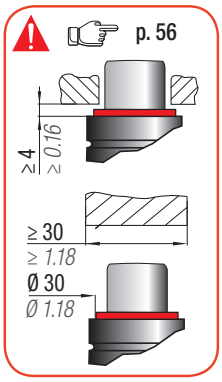

OSAS + OSM = OVER STROKE ACTIVE SAFETY + OVER STROKE MARKER

SW

easy MANIFOLD p. 241

ACTIVE SAFETY

OSAS

USAS

OPAS

* $F1_i$ = Isothermal end force at 100% Cu p. 18

** $F1_p$ = Polytrophic end force at 100% Cu

RV

N_2	°F 32 - 176	°C 0 ~ 80	ΔP	P max	P min	S	SPM	Max Speed	Maintenance kit
			± 0,33 %/°C	150 bar *2175 psi*	20 bar *290 psi*	3,14 cm² *0.487 in²*	~ 20 - 100 (at 20°C)	1,8 m/s	39BMRV00500C

CODE	Cu mm	Cu inch	L mm	L inch	L min mm	L min inch	F0 Initial force daN	F0 lb	$F1_i$ * End force daN	$F1_i$ lb	$F1_p$ ** End force daN	$F1_p$ lb	V0 cm³	V0 in³	~Kg	~lb	PED 2014/68/EU
RV 500 - 010 - A	10	0.39	50	1.97	40	1.57	470 ± 5%	1057	693	1559	824	1852	11,0	0.67	0,27	0.60	✓
RV 500 - 013 - A	13	0.51	56	2.20	43	1.69			713	1602	854	1920	14,0	0.85	0,25	0.55	✓
RV 500 - 016 - A	16	0.63	62	2.44	46	1.81			726	1633	876	1969	17,0	1.04	0,26	0.57	✓
RV 500 - 019 - A	19	0.75	68	2.68	49	1.93			736	1656	892	2005	19,0	1.16	0,28	0.62	✓
RV 500 - 025 - A	25	0.98	80	3.15	55	2.17			751	1688	916	2059	24,0	1.46	0,31	0.68	✓
RV 500 - 032 - A	32	1.26	94	3.70	62	2.44			762	1713	933	2097	30,0	1.83	0,34	0.75	✓
RV 500 - 038 - A	38	1.50	106	4.17	68	2.68			768	1727	944	2122	35,0	2.14	0,37	0.82	✓
RV 500 - 050 - A	50	1.97	130	5.12	80	3.15	150 bar *2175psi*		777	1747	958	2154	46,0	2.81	0,43	0.95	✓
RV 500 - 063 - A	63	2.48	156	6.14	93	3.66			783	1761	968	2176	57,0	3.48	0,49	1.08	✓
RV 500 - 075 - A	75	2.95	180	7.09	105	4.13			787	1769	975	2192	67,0	4.09	0,54	1.19	✓
RV 500 - 080 - A	80	3.15	190	7.48	110	4.33	+ 20 °C *+68 °F*		788	1772	977	2196	72,0	4.39	0,57	1.26	✓
RV 500 - 100 - A	100	3.94	230	9.06	130	5.12			792	1781	983	2210	89,0	5.43	0,66	1.46	✓
RV 500 - 125 - A	125	4.92	280	11.02	155	6.10			795	1788	989	2223	110,0	6.71	0,78	1.72	✓

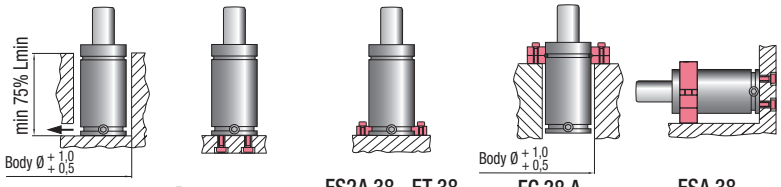

Drop-in | Bottom mount | FS2A 38 - FT 38 FS2B 38 - FTP 38 | FC 38 A FCQC 38 | FSA 38 FSD 38

HOW TO ORDER p. 57

INSTALLATION GUIDELINE p. 203

RV 750

ISO 11901 - 3	VDI 3003 - Blatt 3	B2 4005 (BMW)	W-DX35-6204 (Ford)
B8 3180 220 000 004(MB)	E24.54.815.G (PSA)	39D 997 (VW)	

SPECIAL SPRINGS

SW

OSAS + OSM = OVER STROKE ACTIVE SAFETY + OVER STROKE MARKER

ACTIVE SAFETY

easy MANIFOLD p. 241

OSAS

USAS

OPAS

* $F1_i$ = Isothermal end force at 100% Cu p. 18

** $F1_p$ = Polytrophic end force at 100% Cu

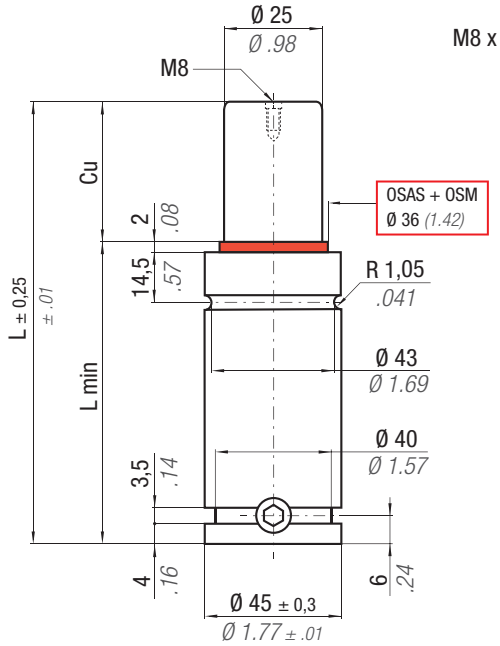

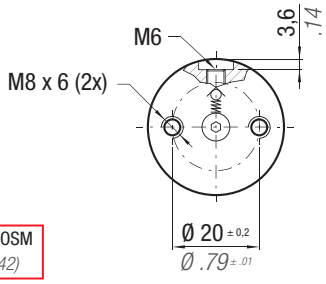

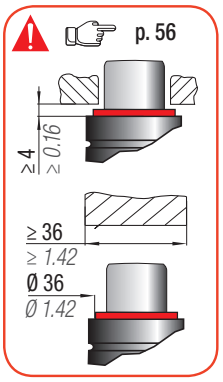

N2	°F 32 - 176	°C 0 - 80	ΔP	P max	P min	S	SPM	Max Speed	Maintenance kit
			± 0,33 %/°C	150 bar *2175 psi*	20 bar *290 psi*	4,91 cm² *0.761 in²*	~ 20 - 100 (at 20°C)	1,8 m/s	39BMRV00750C

CODE	Cu mm	Cu inch	L mm	L inch	L min mm	L min inch	Fo Initial force daN	Fo lb	$F1_i$ * End force daN	$F1_i$ lb	$F1_p$ ** End force daN	$F1_p$ lb	Vo cm³	Vo in³	~Kg	~lb	PED 2014/68/EU
RV 750 - 010 - A	10	0.39	52	2.05	42	1.65	740 ± 5%	1664	1091	2452	1298	2918	18,0	1.10	0,36	0.79	✓
RV 750 - 013 - A	13	0.51	58	2.28	45	1.77			1125	2530	1354	3044	21,0	1.28	0,38	0.84	✓
RV 750 - 016 - A	16	0.63	64	2.52	48	1.89			1151	2587	1395	3136	25,0	1.53	0,40	0.88	✓
RV 750 - 019 - A	19	0.75	70	2.76	51	2.01			1170	2631	1426	3206	29,0	1.77	0,42	0.93	✓
RV 750 - 025 - A	25	0.98	82	3.23	57	2.24			1198	2694	1471	3307	37,0	2.26	0,45	0.99	✓
RV 750 - 032 - A	32	1.26	96	3.78	64	2.52			1220	2742	1506	3386	46,0	2.81	0,50	1.10	✓
RV 750 - 038 - A	38	1.50	108	4.25	70	2.76	150 bar *2175psi*		1232	2771	1527	3433	53,0	3.23	0,54	1.19	✓
RV 750 - 050 - A	50	1.97	132	5.20	82	3.23			1250	2810	1556	3498	68,0	4.15	0,61	1.34	✓
RV 750 - 063 - A	63	2.48	158	6.22	95	3.74			1262	2838	1577	3545	85,0	5.19	0,70	1.54	✓
RV 750 - 075 - A	75	2.95	182	7.17	107	4.21	+ 20 °C *+68 °F*		1270	2855	1590	3574	100,0	6.10	0,78	1.72	✓
RV 750 - 080 - A	80	3.15	192	7.56	112	4.41			1273	2861	1594	3583	107,0	6.53	0,81	1.79	✓
RV 750 - 100 - A	100	3.94	232	9.13	132	5.20			1281	2879	1607	3613	132,0	8.05	0,94	2.07	✓
RV 750 - 125 - A	125	4.92	282	11.10	157	6.18			1287	2894	1618	3637	164,0	10.00	1,10	2.43	✓

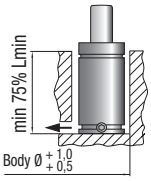

Drop-in

Bottom mount
FB 45 - FBA 45
FBB 45 - FBD 45

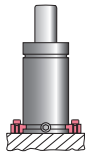

FS2 45 - FT 45
FS2A 45 - FTP 45

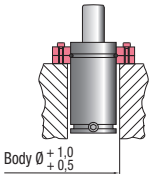

FC 45 A
FCQC 45

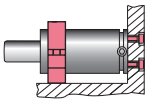

FSA 45
FSD 45 - FSE 45

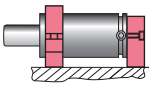

FSA 45 + R 50 A
FSE 45 + R 50 A

HOW TO ORDER p. 57

INSTALLATION GUIDELINE p. 203

ISO 11901 - 3	VDI 3003 - Blatt 3	B2 4005 (BMW)	W-DX35-6204 (Ford)
B8 3180 220 000 004(MB)	E24.54.815.G (PSA)	39D 997 (VW)	

RV 1000

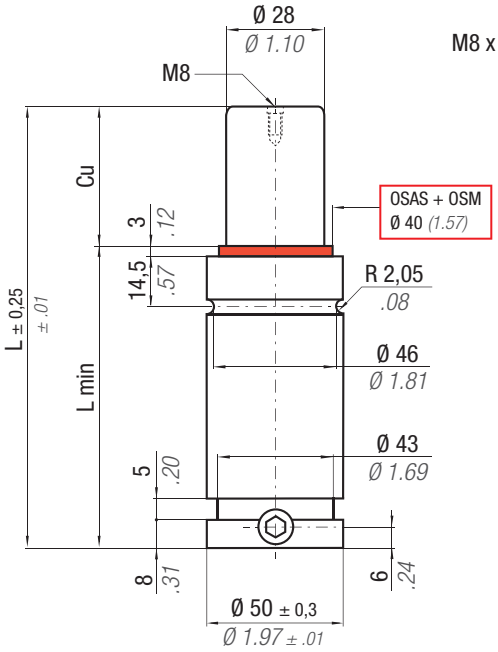

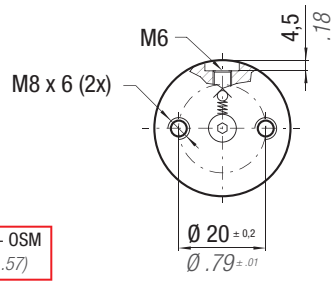

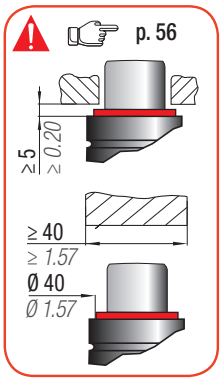

OSAS + OSM = OVER STROKE ACTIVE SAFETY + OVER STROKE MARKER

SW

easy MANIFOLD p. 241

ACTIVE SAFETY

OSAS

USAS

OPAS

* $F1_i$ = Isothermal end force at 100% Cu p. 18

** $F1_p$ = Polytrophic end force at 100% Cu

RV

N_2	°F 32 - 176	°C 0 ~ 80	ΔP	P max	P min	S	SPM	Max Speed	Maintenance kit
			± 0,33 %/°C	150 bar *2175 psi*	20 bar *290 psi*	6,15 cm² *0.953 in²*	~ 20 - 100 (at 20°C)	1,8 m/s	39BMRV01000C

CODE	Cu mm	Cu inch	L mm	L inch	L min mm	L min inch	F0 Initial force daN	F0 lb	$F1_i$ * End force daN	$F1_i$ lb	$F1_p$ ** End force daN	$F1_p$ lb	V0 cm³	V0 in³	~Kg	~lb	PED 2014/68/EU
RV 1000 - 010 - A	10	0.39	58	2.28	48	1.89	920 ± 5%	2068	1300	2923	1523	3424	25,0	1.53	0,49	1.08	✓
RV 1000 - 013 - A	13	0.51	64	2.52	51	2.01			1349	3033	1599	3595	29,0	1.77	0,51	1.12	✓
RV 1000 - 016 - A	16	0.63	70	2.76	54	2.13			1386	3117	1658	3727	34,0	2.07	0,54	1.19	✓
RV 1000 - 019 - A	19	0.75	76	2.99	57	2.24			1416	3183	1705	3833	39,0	2.38	0,56	1.23	✓
RV 1000 - 025 - A	25	0.98	88	3.46	63	2.48			1460	3282	1775	3990	48,0	2.93	0,61	1.34	✓
RV 1000 - 032 - A	32	1.26	102	4.02	70	2.76			1495	3361	1832	4118	59,0	3.60	0,67	1.48	✓
RV 1000 - 038 - A	38	1.50	114	4.49	76	2.99	150 bar *2175 psi*		1517	3410	1868	4199	69,0	4.21	0,72	1.59	✓
RV 1000 - 050 - A	50	1.97	138	5.43	88	3.46			1548	3479	1919	4314	88,0	5.37	0,81	1.79	✓
RV 1000 - 063 - A	63	2.48	164	6.46	101	3.98			1570	3528	1955	4395	108,0	6.59	0,92	2.03	✓
RV 1000 - 075 - A	75	2.95	188	7.40	113	4.45	+ 20 °C *+68 °F*		1584	3560	1978	4447	127,0	7.75	1,01	2.23	✓
RV 1000 - 080 - A	80	3.15	198	7.80	118	4.65			1589	3571	1986	4465	135,0	8.24	1,05	2.31	✓
RV 1000 - 100 - A	100	3.94	238	9.37	138	5.43			1603	3604	2011	4521	166,0	10.13	1,21	2.67	✓
RV 1000 - 125 - A	125	4.92	288	11.34	163	6.42			1616	3632	2031	4566	205,0	12.51	1,41	3.11	✓

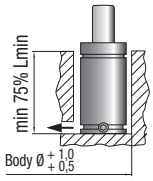

Drop-in

Bottom mount
FB 50 - FBA 50
FBB 50 - FBD 50

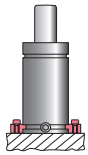

FS2 50 - FT 50
FS2A 50 - FTP 50

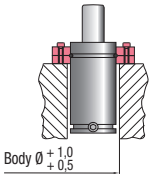

FC 50 A
FCQC 50

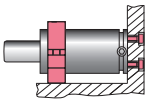

FSA 50
FSD 50 - FSE 50

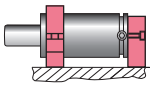

FSD 50 + R 50 A
FSE 50 + R 50 A

HOW TO ORDER p. 57

INSTALLATION GUIDELINE p. 203

RV 1200

SPECIAL SPRINGS

SW

OSAS + OSM = OVER STROKE ACTIVE SAFETY + OVER STROKE MARKER

ACTIVE SAFETY

easy MANIFOLD p. 241

OSAS

USAS

OPAS

* $F1_i$ = Isothermal end force at 100% Cu p. 18

** $F1_p$ = Polytrophic end force at 100% Cu

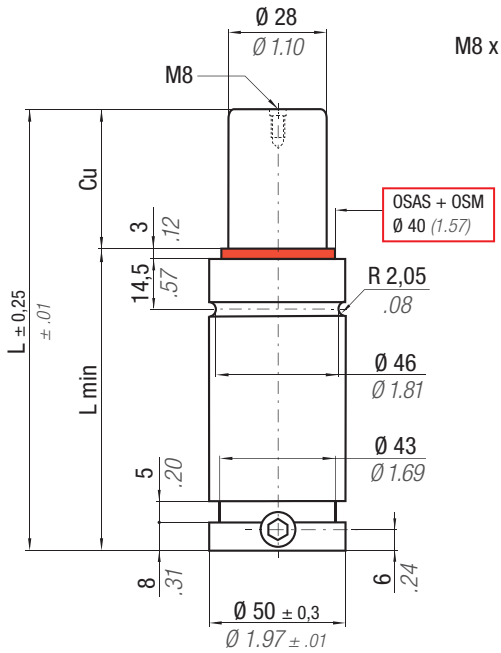

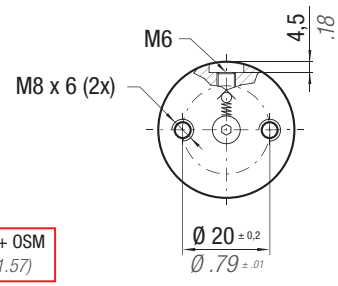

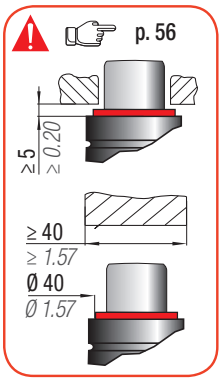

N_2	°F 32 - 176	°C 0 - 80	ΔP	P max	P min	S	SPM	Max Speed	Maintenance kit
			± 0,33 %/°C	170 bar *2465 psi*	20 bar *290 psi*	6,15 cm² *0.953 in²*	~ 20 - 100 (at 20°C)	1,8 m/s	39BMRV01000C

CODE	Cu mm	Cu inch	L mm	L inch	L min mm	L min inch	Fo Initial force daN	Fo lb	$F1_i$ * End force daN	$F1_i$ lb	$F1_p$ ** End force daN	$F1_p$ lb	Vo cm³	Vo in³	~Kg	~lb	PED 2014/68/EU
RV 1200 - 010 - A	10	0.39	58	2.28	48	1.89	1060 ± 5%	2383	1494	3359	1717	3859	25,0	1.53	0,49	1.08	✓
RV 1200 - 013 - A	13	0.51	64	2.52	51	2.01			1553	3490	1802	4052	30,0	1.83	0,51	1.12	✓
RV 1200 - 016 - A	16	0.63	70	2.76	54	2.13			1597	3591	1869	4202	34,0	2.07	0,54	1.19	✓
RV 1200 - 019 - A	19	0.75	76	2.99	57	2.24			1633	3671	1922	4321	39,0	2.38	0,56	1.23	✓
RV 1200 - 025 - A	25	0.98	88	3.46	63	2.48			1685	3789	2001	4500	48,0	2.93	0,61	1.34	✓
RV 1200 - 032 - A	32	1.26	102	4.02	70	2.76			1728	3884	2066	4644	59,0	3.60	0,67	1.48	✓
RV 1200 - 038 - A	38	1.50	114	4.49	76	2.99	170 bar *2465 psi*		1754	3943	2106	4735	69,0	4.21	0,72	1.59	✓
RV 1200 - 050 - A	50	1.97	138	5.43	88	3.46			1791	4026	2163	4863	88,0	5.37	0,81	1.79	✓
RV 1200 - 063 - A	63	2.48	164	6.46	101	3.98			1817	4085	2204	4954	108,0	6.59	0,92	2.03	✓
RV 1200 - 075 - A	75	2.95	188	7.40	113	4.45	+ 20 °C *+68 °F*		1834	4124	2230	5013	127,0	7.75	1,01	2.23	✓
RV 1200 - 080 - A	80	3.15	198	7.80	118	4.65			1840	4137	2239	5033	135,0	8.24	1,05	2.31	✓
RV 1200 - 100 - A	100	3.94	238	9.37	138	5.43			1858	4177	2267	5096	166,0	10.13	1,21	2.67	✓
RV 1200 - 125 - A	125	4.92	288	11.34	163	6.42			1873	4210	2290	5148	205,0	12.51	1,41	3.11	✓

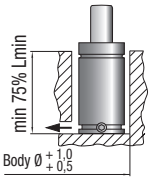

Drop-in

Bottom mount
FB 50 - FBA 50
FBB 50 - FBD 50

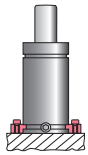

FS2 50 - FT 50
FS2A 50 - FTP 50

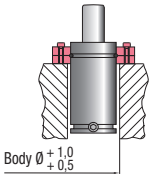

FC 50 A
FCQC 50

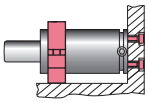

FSA 50
FSD 50 - FSE 50

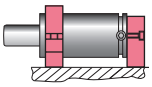

FSD 50 + R 50 A
FSE 50 + R 50 A

HOW TO ORDER p. 57

INSTALLATION GUIDELINE p. 203

ISO 11901 - 3	VDI 3003 - Blatt 3	B2 4005 (BMW)	W-DX35-6204 (Ford)
B8 3180 220 000 004(MB)	39D 997 (VW)		

RV 1500

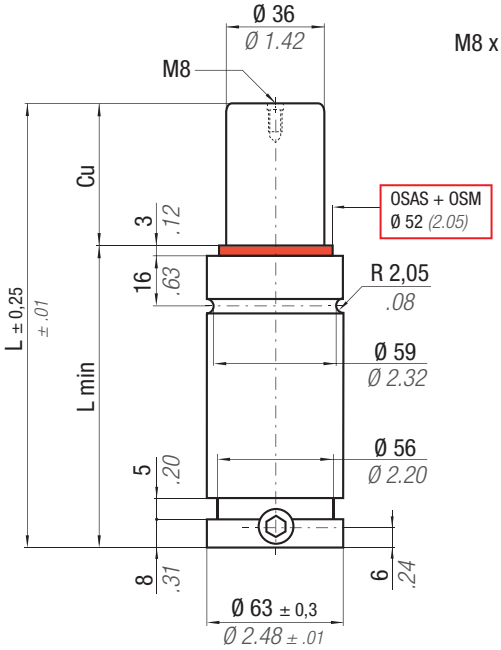

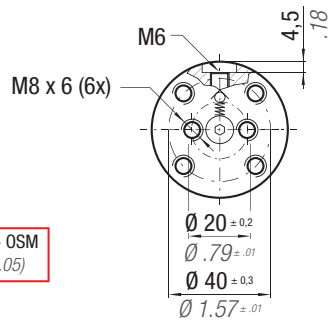

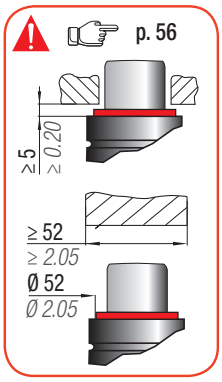

OSAS + OSM = OVER STROKE ACTIVE SAFETY + OVER STROKE MARKER

SW

Il nuovo codice sarà fornito solo ad esaurimento del vecchio

The new code will be supplied only when the old will be out of stock

Der neue Kode wird geliefert nur wenn der alte nicht mehr im Lager ist

Le nouveau code sera fourni uniquement lorsque le vieux stock sera ecoulé

El nuevo código será suministrado sólo cuando el viejo está fuera de stock

O novo código irá ser fornecido apenas quando o antigo esgotar stock

ACTIVE SAFETY

OSAS

USAS

OPAS

RV

easy MANIFOLD p. 241

* $F1_i$ = Isothermal end force at 100% Cu p. 18

** $F1_p$ = Polytrophic end force at 100% Cu

N2	°F 32 - 176	°C 0 - 80	ΔP ± 0,33 %/°C	P max 150 bar 2175 psi	P min 20 bar 290 psi	S 10,18 cm² 1.578 in²	SPM ~ 20 - 100 (at 20°C)	Max Speed 1,8 m/s	Maintenance kit 39BMRV01500C

CODE PHASING OUT from 11/2019	NEW	Cu mm	Cu inch	L mm	L inch	L min mm	L min inch	F0 Initial force daN	F0 lb	$F1_i$ End force * daN	$F1_i$ lb	$F1_p$ End force ** daN	$F1_p$ lb	V0 cm³	V0 in³	~Kg	~lb	PED 2014/68/EU
RV 1500 - 010 - A	RV 1500 - 010 - B	10	0.39	64	2.52	54	2.13	1530 ± 5%	3440	2074	4663	2400	5395	45,0	2.75	0,88	1.94	✓
RV 1500 - 013 - A	RV 1500 - 013 - B	13	0.51	70	2.76	57	2.24			2152	4838	2521	5667	53,0	3.23	0,91	2.01	✓
RV 1500 - 016 - A	RV 1500 - 016 - B	16	0.63	76	2.99	60	2.36			2213	4975	2616	5881	61,0	3.72	0,96	2.12	✓
RV 1500 - 019 - A	RV 1500 - 019 - B	19	0.75	82	3.23	63	2.48			2262	5085	2693	6054	69,0	4.21	0,99	2.18	✓
RV 1500 - 025 - A	RV 1500 - 025 - B	25	0.98	94	3.70	69	2.72			2336	5252	2811	6319	85,0	5.19	1,06	2.34	✓
RV 1500 - 032 - A	RV 1500 - 032 - B	32	1.26	108	4.25	76	2.99			2397	5389	2908	6537	103,0	6.28	1,14	2.51	✓
RV 1500 - 038 - A	RV 1500 - 038 - B	38	1.50	120	4.72	82	3.23	150 bar 2175 psi		2435	5475	2971	6679	119,0	7.26	1,21	2.67	✓
RV 1500 - 050 - A	RV 1500 - 050 - B	50	1.97	144	5.67	94	3.70			2490	5597	3059	6877	151,0	9.21	1,36	3.00	✓
RV 1500 - 063 - A	RV 1500 - 063 - B	63	2.48	170	6.69	107	4.21			2529	5685	3123	7021	186,0	11.35	1,52	3.35	✓
RV 1500 - 075 - A	RV 1500 - 075 - B	75	2.95	194	7.64	119	4.69	+ 20 °C +68 °F		2555	5743	3165	7115	217,0	13.24	1,66	3.66	✓
RV 1500 - 080 - A	RV 1500 - 080 - B	80	3.15	204	8.03	124	4.88			2563	5763	3180	7149	231,0	14.09	1,72	3.79	✓
RV 1500 - 100 - A	RV 1500 - 100 - B	100	3.94	244	9.61	144	5.67			2590	5824	3224	7248	284,0	17.32	1,95	4.30	✓
RV 1500 - 125 - A	RV 1500 - 125 - B	125	4.92	294	11.57	169	6.65			2613	5875	3262	7333	350,0	21.36	2,24	4.94	✓

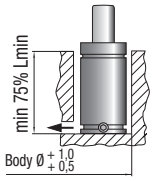

Drop-in

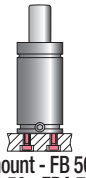

Bottom mount - FB 50 - FB 63
FB 75 - FBA 50 - FBA 75 - FBB 50
FBB 63 - FBB 75 - FBD 50 - FBD 75

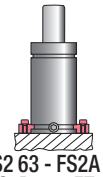

FS2 63 - FS2A 63
FS2B 63 - FT 63
FTP 63

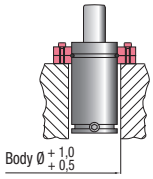

FC 63 A- FCQ 63 A
FCQC 63

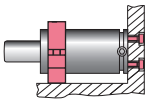

FSC 63
FSD 63

HOW TO ORDER p. 57

INSTALLATION GUIDELINE p. 203

RV 2400

ISO 11901 - 3	VDI 3003 - Blatt 3	B2 4005 (BMW)	W-DX35-6204 (Ford)
B8 3180 220 000 004(MB)	E24.54.815.G (PSA)	39D 997 (VW)	

SPECIAL SPRINGS

SW

OSAS + OSM = OVER STROKE ACTIVE SAFETY + OVER STROKE MARKER

ACTIVE SAFETY

easy MANIFOLD p. 241

OSAS

* $F1_i$ = Isothermal end force at 100% Cu p. 18

** $F1_p$ = Polytrophic end force at 100% Cu

USAS

OPAS

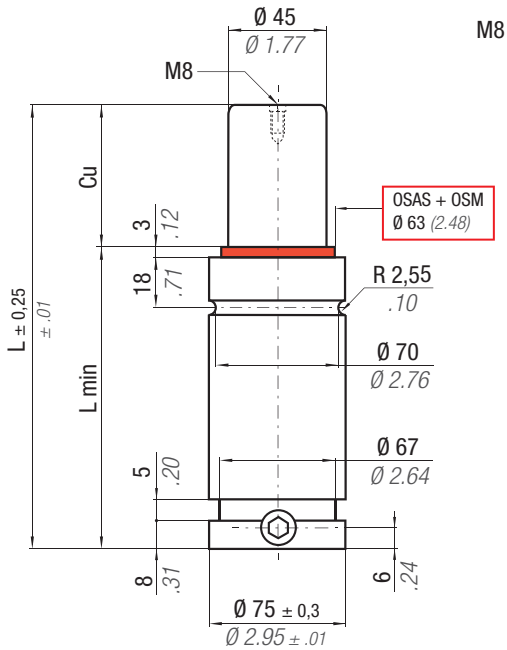

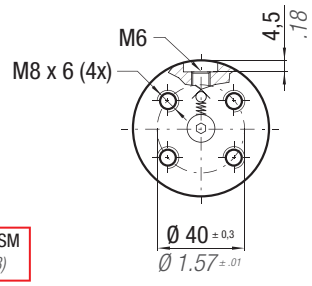

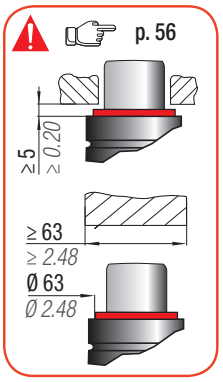

N2	°F 32 - 176	°C 0 - 80	ΔP	P max	P min	S	SPM	Max Speed	Maintenance kit
			± 0,33 %/°C	150 bar *2175 psi*	20 bar *290 psi*	15,90 cm² *2.465 in²*	~ 20 - 100 (at 20°C)	1,8 m/s	39BMRV02400D

CODE	Cu mm	Cu inch	L mm	L inch	L min mm	L min inch	F0 Initial force daN	F0 lb	$F1_i$ * End force daN	$F1_i$ lb	$F1_p$ ** End force daN	$F1_p$ lb	V0 cm³	V0 in³	~Kg	~lb	PED 2014/68/EU
RV 2400 - 010 - A	10	0.39	65	2.56	55	2.17	2385 ± 5%	5362	3264	7338	3786	8511	69,0	4.21	1,25	2.76	✓
RV 2400 - 013 - A	13	0.51	71	2.80	58	2.28			3392	7626	3984	8956	81,0	4.94	1,30	2.87	✓
RV 2400 - 016 - A	16	0.63	77	3.03	61	2.40			3493	7852	4142	9312	93,0	5.67	1,35	2.98	✓
RV 2400 - 019 - A	19	0.75	83	3.27	64	2.52			3574	8035	4271	9602	105,0	6.41	1,40	3.09	✓
RV 2400 - 025 - A	25	0.98	95	3.74	70	2.76			3698	8313	4468	10044	129,0	7.87	1,50	3.31	✓
RV 2400 - 032 - A	32	1.26	109	4.29	77	3.03			3800	8542	4632	10413	157,0	9.58	1,61	3.55	✓
RV 2400 - 038 - A	38	1.50	121	4.76	83	3.27	150 bar *2175 psi*		3864	8687	4737	10649	181,0	11.04	1,70	3.75	✓
RV 2400 - 050 - A	50	1.97	145	5.71	95	3.74			3956	8893	4887	10986	230,0	14.03	1,89	4.17	✓
RV 2400 - 063 - A	63	2.48	171	6.73	108	4.25			4022	9042	4996	11231	282,0	17.20	2,10	4.63	✓
RV 2400 - 075 - A	75	2.95	195	7.68	120	4.72	+ 20 °C *+68 °F*		4066	9140	5068	11393	330,0	20.13	2,29	5.05	✓
RV 2400 - 080 - A	80	3.15	205	8.07	125	4.92			4081	9174	5093	11450	350,0	21.35	2,37	5.22	✓
RV 2400 - 100 - A	100	3.94	245	9.65	145	5.71			4127	9278	5169	11620	431,0	26.29	2,68	5.91	✓
RV 2400 - 125 - A	125	4.92	295	11.61	170	6.69			4166	9365	5234	11767	532,0	32.45	3,07	6.77	✓

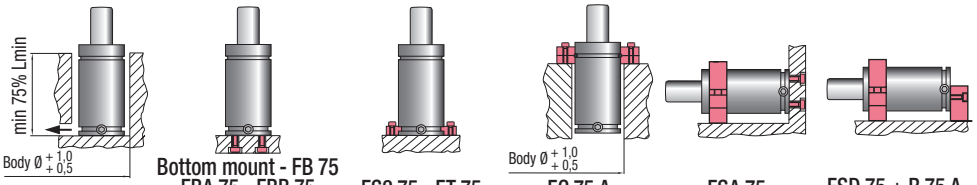

Drop-in

Bottom mount - FB 75
FBA 75 - FBB 75
FBC 75 - FBD 75

FS2 75 - FT 75
FS2A 75 - FTP 75

Body Ø + 1,0 + 0,5
FC 75 A
FCQC 75

FSA 75
FSD 75 - FSE 75

FSD 75 + R 75 A
FSE 75 + R 75 A

HOW TO ORDER p. 57

INSTALLATION GUIDELINE p. 203

ISO 11901 - 3	VDI 3003 - Blatt 3	B2 4005 (BMW)	075.90.60 (FCA)
W-DX35-6204 (Ford)	PG 24D (Mazda)	B8 3180 220 000 004(MB)	E24.54.815.G (PSA)
39D 997 (VW)			

RV 4200

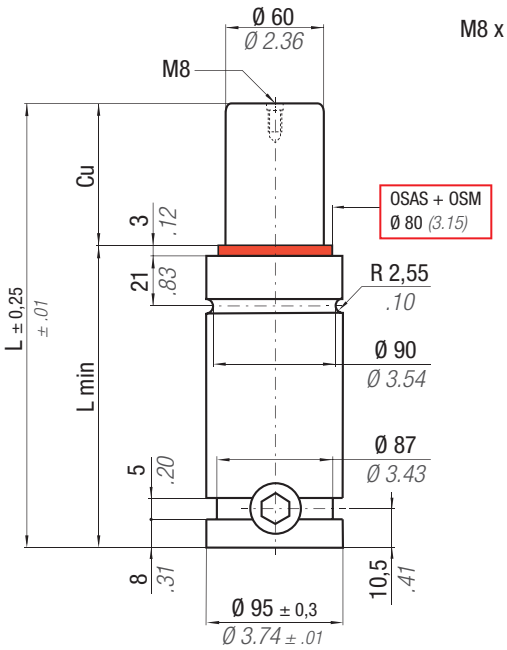

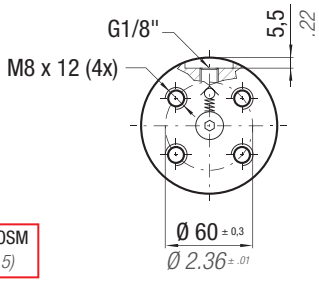

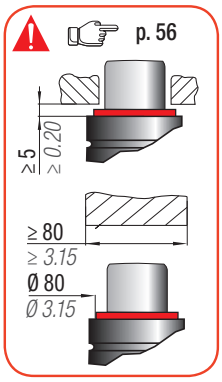

OSAS + OSM = OVER STROKE ACTIVE SAFETY + OVER STROKE MARKER

SW

easy MANIFOLD p. 241

ACTIVE SAFETY

OSAS

USAS

OPAS

* $F1_i$ = Isothermal end force at 100% Cu p. 18

** $F1_p$ = Polytrophic end force at 100% Cu

RV

N_2	°F 32 - 176	°C 0 - 80	ΔP	P max	P min	S	SPM	Max Speed	Maintenance kit
			± 0,33 %/°C	150 bar *2175 psi*	20 bar *290 psi*	28,27 cm² *4.382 in²*	~ 20 - 100 (at 20°C)	1,8 m/s	39BMRV04200C

CODE	Cu mm	Cu inch	L mm	L inch	L min mm	L min inch	F0 Initial force daN	F0 lb	$F1_i$ * End force daN	$F1_i$ lb	$F1_p$ ** End force daN	$F1_p$ lb	V0 cm³	V0 in³	~Kg	~lb	PED 2014/68/EU
RV 4200 - 016 - A	16	0.63	90	3.54	74	2.91	4240 ± 5%	9532	6080	13669	7162	16101	173,0	10.55	2,76	6.08	✓
RV 4200 - 019 - A	19	0.75	96	3.78	77	3.03			6246	14041	7421	16683	193,0	11.77	2,84	6.26	✓
RV 4200 - 025 - A	25	0.98	108	4.25	83	3.27			6506	14626	7834	17612	234,0	14.27	2,99	6.59	✓
RV 4200 - 032 - A	32	1.26	122	4.80	90	3.54			6729	15128	8194	18421	281,0	17.14	3,16	6.97	✓
RV 4200 - 038 - A	38	1.50	134	5.28	96	3.78			6876	15458	8432	18956	322,0	19.64	3,31	7.30	✓
RV 4200 - 050 - A	50	1.97	158	6.22	108	4.25	150 bar *2175 psi*		7091	15940	8783	19745	403,0	24.58	3,61	7.96	✓
RV 4200 - 063 - A	63	2.48	184	7.24	121	4.76			7251	16301	9048	20341	491,0	29.95	3,94	8.69	✓
RV 4200 - 075 - A	75	2.95	208	8.19	133	5.24			7359	16543	9227	20743	572,0	34.89	4,24	9.35	✓
RV 4200 - 080 - A	80	3.15	218	8.58	138	5.43	+ 20 °C *+68 °F*		7396	16626	9288	20880	606,0	36.97	4,36	9.61	✓
RV 4200 - 100 - A	100	3.94	258	10.16	158	6.22			7512	16888	9483	21319	741,0	45.20	4,86	10.71	✓
RV 4200 - 125 - A	125	4.92	308	12.13	183	7.20			7612	17113	9651	21696	910,0	55.51	5,48	12.08	✓

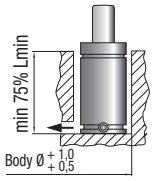

Drop-in

Bottom mount
FB 95 - FBA 95
FBB 95

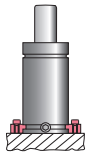

FS2 95 - FT 95
FS2A 95 - FTP 95

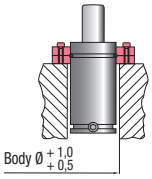

FC 95 A
FCQC 95

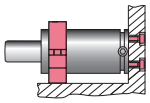

FSA 95
FSD 95 - FSE 95

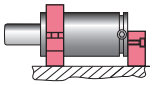

FSD 95 + R 95 A
FSE 95 + R 95 A

HOW TO ORDER p. 57

INSTALLATION GUIDELINE p. 203

RV 6600

ISO 11901 - 3	VDI 3003 - Blatt 3	B2 4005 (BMW)	075.90.60 (FCA)
W-DX35-6204 (Ford)	B8 3180 220 000 004(MB)	39D 997 (VW)	

SPECIAL SPRINGS

SW

OSAS + OSM = OVER STROKE ACTIVE SAFETY + OVER STROKE MARKER

ACTIVE SAFETY

easy MANIFOLD p. 241

OSAS

USAS

OPAS

* $F1_i$ = Isothermal end force at 100% Cu p. 18

** $F1_p$ = Polytrophic end force at 100% Cu

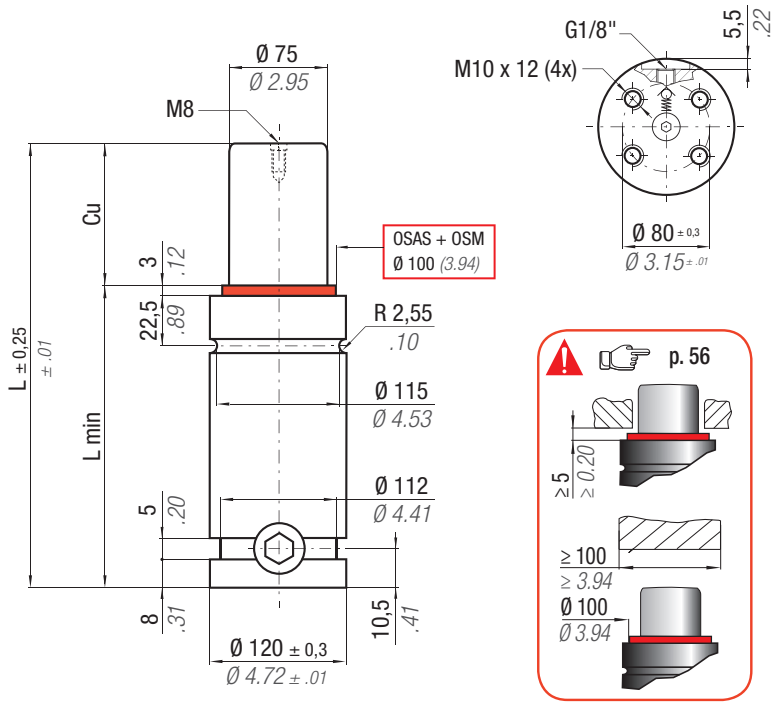

N2	°F 32 - 176	°C 0 - 80	ΔP	P max	P min	S	SPM	Max Speed	Maintenance kit
			± 0,33 %/°C	150 bar *2175 psi*	20 bar *290 psi*	44,18 cm² *6.848 in²*	~ 20 - 100 (at 20°C)	1,8 m/s	39BMRV06600C

CODE	Cu mm	Cu inch	L mm	L inch	L min mm	L min inch	Fo Initial force daN	Fo lb	$F1_i$ * End force daN	$F1_i$ lb	$F1_p$ ** End force daN	$F1_p$ lb	Vo cm³	Vo in³	~Kg	~lb	PED 2014/68/EU
RV 6600 - 016 - A	16	0.63	100	3.94	84	3.31	6630 ± 5% 150 bar 2175 psi + 20 °C +68 °F	14904	9125	20515	10607	23845	300,0	18.30	5,12	11.29	✓
RV 6600 - 019 - A	19	0.75	106	4.17	87	3.43			9376	21077	10995	24718	332,0	20.25	5,23	11.53	✓
RV 6600 - 025 - A	25	0.98	118	4.65	93	3.66			9779	21985	11628	26141	396,0	24.16	5,47	12.06	✓
RV 6600 - 032 - A	32	1.26	132	5.20	100	3.94			10136	22787	12195	27415	471,0	28.73	5,75	12.68	✓
RV 6600 - 038 - A	38	1.50	144	5.67	106	4.17			10375	23325	12578	28276	535,0	32.64	5,99	13.21	✓
RV 6600 - 050 - A	50	1.97	168	6.61	118	4.65			10733	24129	13157	29578	663,0	40.44	6,47	14.26	✓
RV 6600 - 063 - A	63	2.48	194	7.64	131	5.16			11006	24743	13604	30583	801,0	48.86	6,99	15.41	✓
RV 6600 - 075 - A	75	2.95	218	8.58	143	5.63			11193	25163	13911	31273	930,0	56.73	7,47	16.47	✓
RV 6600 - 080 - A	80	3.15	228	8.98	148	5.83			11258	25308	14018	31514	983,0	59.96	7,67	16.91	✓
RV 6600 - 100 - A	100	3.94	268	10.55	168	6.61			11463	25771	14359	32280	1197,0	73.02	8,46	18.65	✓
RV 6600 - 125 - A	125	4.92	318	12.52	193	7.60			11642	26171	14656	32948	1464,0	89.30	9,46	20.86	✓

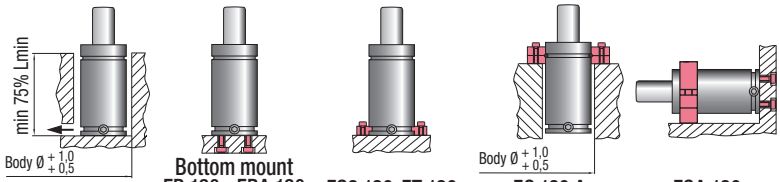

Drop-in

Bottom mount
FB 120 - FBA 120
FBB 120

FS2 120-FT 120
FS2A 120-FTP 120

FC 120 A
FCQC 120

FSA 120
FSD 120

HOW TO ORDER p. 57

INSTALLATION GUIDELINE p. 203

ISO 11901 - 3	VDI 3003 - Blatt 3	B2 4005 (BMW)	075.90.60 (FCA)
W-DX35-6204 (Ford)	PG 24D (Mazda)	B8 3180 220 000 004(MB)	39D 997 (VW)

RV 9500

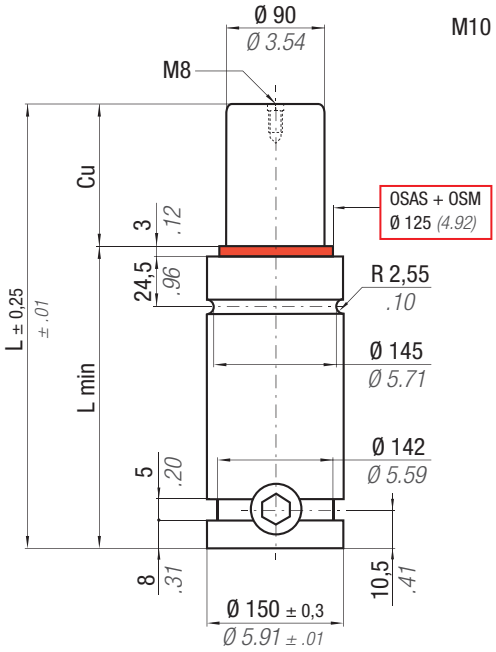

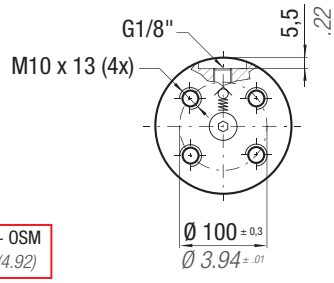

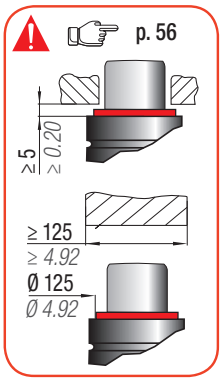

OSAS + OSM = OVER STROKE ACTIVE SAFETY + OVER STROKE MARKER

SW

easy MANIFOLD p. 241

ACTIVE SAFETY

OSAS

USAS

OPAS

* $F1_i$ = Isothermal end force at 100% Cu p. 18

** $F1_p$ = Polytrophic end force at 100% Cu

RV

N_2	°F 32 - 176	°C 0 - 80	ΔP	P max	P min	S	SPM	Max Speed	Maintenance kit
			± 0,33 %/°C	150 bar / 2175 psi	20 bar / 290 psi	63,62 cm² / 9.864 in²	~ 20 - 80 (at 20°C)	1,8 m/s	39BMRV09500C

CODE	Cu mm	Cu inch	L mm	L inch	L min mm	L min inch	F0 Initial force daN	F0 lb	$F1_i$ * End force daN	$F1_i$ lb	$F1_p$ ** End force daN	$F1_p$ lb	V0 cm³	V0 in³	~Kg	~lb	PED 2014/68/EU
RV 9500 - 019 - A	19	0.75	116	4.57	97	3.82			13101	29453	15214	34202	517,0	31.54	9,56	21.08	✓
RV 9500 - 025 - A	25	0.98	128	5.04	103	4.06			13637	30656	16044	36068	614,0	37.45	9,93	21.89	✓
RV 9500 - 032 - A	32	1.26	142	5.59	110	4.33	9540	21446	14112	31726	16792	37750	727,0	44.35	10,37	22.86	✓
RV 9500 - 038 - A	38	1.50	154	6.06	116	4.57	± 5%		14432	32445	17299	38890	823,0	50.20	10,74	23.68	✓
RV 9500 - 050 - A	50	1.97	178	7.01	128	5.04			14914	33528	18070	40623	1017,0	62.04	11,49	25.33	✓
RV 9500 - 063 - A	63	2.48	204	8.03	141	5.55	150 bar	2175 psi	15283	34358	18666	41963	1226,0	74.79	12,30	27.12	✓
RV 9500 - 075 - A	75	2.95	228	8.98	153	6.02			15536	34927	19078	42889	1420,0	86.62	13,05	28.77	✓
RV 9500 - 080 - A	80	3.15	238	9.37	158	6.22	+ 20 °C	+68 °F	15625	35125	19222	43213	1500,0	91.50	13,37	29.48	✓
RV 9500 - 100 - A	100	3.94	278	10.94	178	7.01			15905	35756	19681	44245	1823,0	111.20	14,61	32.21	✓
RV 9500 - 125 - A	125	4.92	328	12.91	203	7.99			16148	36303	20082	45146	2226,0	135.79	16,18	35.67	✓

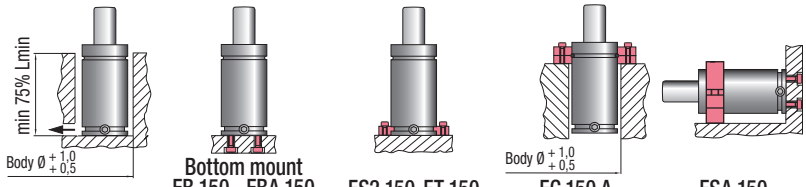

HOW TO ORDER p. 57

INSTALLATION GUIDELINE p. 203

RV 12000

SPECIAL SPRINGS

SW

OSAS + OSM = OVER STROKE ACTIVE SAFETY + OVER STROKE MARKER

ACTIVE SAFETY

easy MANIFOLD p. 241

OSAS

USAS

OPAS

* $F1_i$ = Isothermal end force at 100% Cu p. 18

** $F1_p$ = Polytrophic end force at 100% Cu

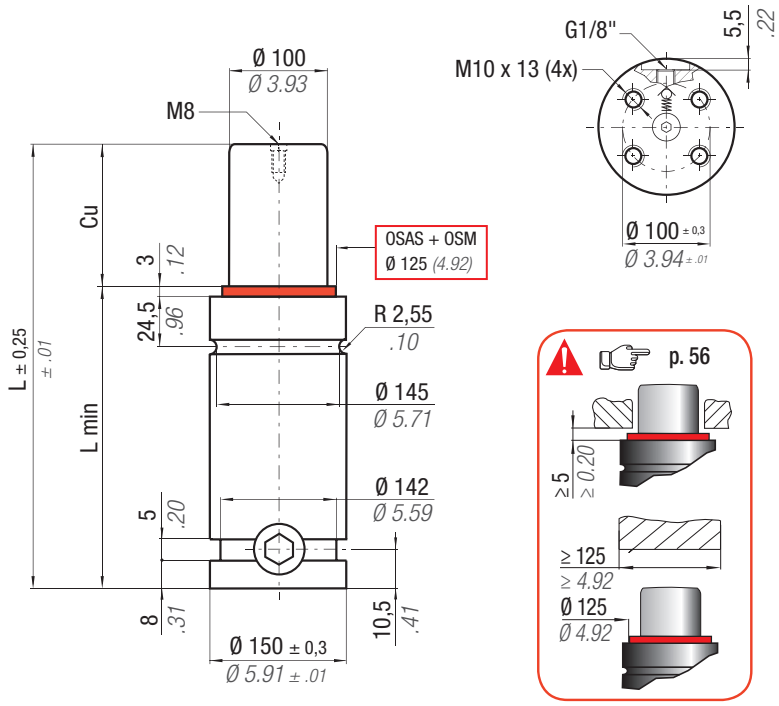

N2	°F 32 - 176	°C 0 - 80	ΔP	P max	P min	S	SPM	Max Speed	Maintenance kit
			± 0,33 %/°C	150 bar *2175 psi*	20 bar *290 psi*	78,54 cm² *12.173 in²*	~ 20 - 80 (at 20°C)	1,8 m/s	39BMRV12000A

CODE	Cu mm	Cu inch	L mm	L inch	L min mm	L min inch	Fo Initial force daN	Fo lb	$F1_i$ * End force daN	$F1_i$ lb	$F1_p$ ** End force daN	$F1_p$ lb	Vo cm³	Vo in³	~Kg	~lb	PED 2014/68/EU
RV 12000 - 019 - A	19	0.75	116	4.57	97	3.82	11780 ± 5%	26470	16891	37973	19896	44728	571,0	34.83	9,34	20.59	✓
RV 12000 - 025 - A	25	0.98	128	5.04	103	4.06			17735	39870	21225	47716	675,0	41.18	9,73	21.45	✓
RV 12000 - 032 - A	32	1.26	142	5.59	110	4.33			18503	41596	22454	50479	796,0	48.56	10,18	22.44	✓
RV 12000 - 038 - A	38	1.50	154	6.06	116	4.57			19030	42780	23307	52396	900,0	54.90	10,57	23.30	✓
RV 12000 - 050 - A	50	1.97	178	7.01	128	5.04	150 bar *2175 psi*		19837	44596	24629	55368	1108,0	67.59	11,35	25.02	✓
RV 12000 - 063 - A	63	2.48	204	8.03	141	5.55			20469	46016	25676	57722	1332,0	81.25	12,20	26.90	✓
RV 12000 - 075 - A	75	2.95	228	8.98	153	6.02			20909	47006	26412	59377	1540,0	93.94	12,97	28.59	✓
RV 12000 - 080 - A	80	3.15	238	9.37	158	6.22	+ 20 °C *+68 °F*		21063	47353	26671	59959	1626,0	99.19	13,30	29.32	✓
RV 12000 - 100 - A	100	3.94	278	10.94	178	7.01			21559	48467	27507	61838	1972,0	120.29	14,60	32.19	✓
RV 12000 - 125 - A	125	4.92	328	12.91	203	7.99			21995	49447	28249	63506	2405,0	146.71	16,22	35.76	✓

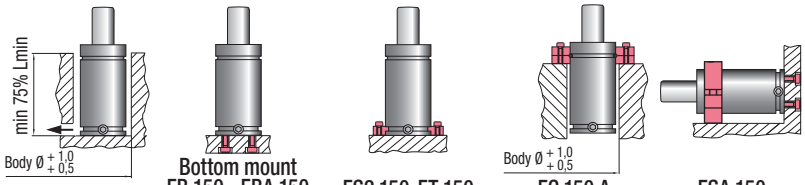

Drop-in

Bottom mount
FB 150 - FBA 150
FBB 150 - FBD 150

FS2 150-FT 150
FS2A 150-FTP 150

Body Ø + 1,0 + 0,5
FC 150 A
FCQC 150

FSA 150
FSD 150

HOW TO ORDER p. 57

INSTALLATION GUIDELINE p. 203

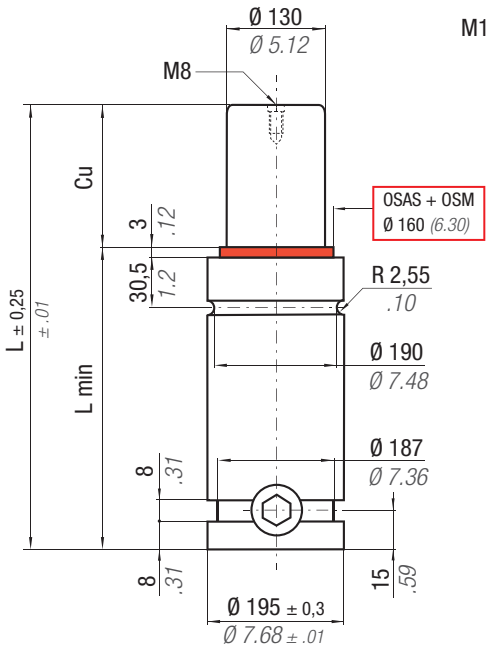

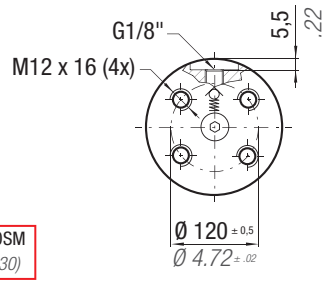

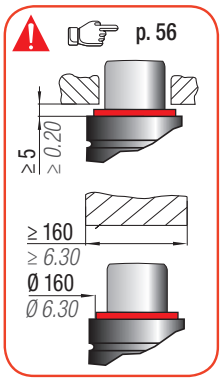

OSAS + OSM = OVER STROKE ACTIVE SAFETY + OVER STROKE MARKER

SW

easy MANIFOLD p. 241

ACTIVE SAFETY

OSAS

USAS

OPAS

* $F1_i$ = Isothermal end force at 100% Cu p. 18

** $F1_p$ = Polytrophic end force at 100% Cu

RV

N_2	°F 32 - 176	°C 0 - 80	ΔP	P max	P min	S	SPM	Max Speed	Maintenance kit
			± 0,33 %/°C	150 bar *2175 psi*	20 bar *290 psi*	132,73 cm² *20.573 in²*	~ 20 - 80 (at 20°C)	1,8 m/s	39BMRV20000A

CODE	Cu mm	Cu inch	L mm	L inch	L min mm	L min inch	F0 Initial force daN	F0 lb	$F1_i$ * End force daN	$F1_i$ lb	$F1_p$ ** End force daN	$F1_p$ lb	V0 cm³	V0 in³	~Kg	~lb	PED 2014/68/EU
RV 20000 - 019 - A	19	0.75	148	5.83	129	5.08	19910 ± 5%	44738	26987	60669	31207	70156	1118,0	68.20	21,58	47.58	✓
RV 20000 - 025 - A	25	0.98	160	6.30	135	5.32			28383	63807	33368	75014	1288,0	78.57	22,29	49.14	✓
RV 20000 - 032 - A	32	1.26	174	6.85	142	5.59			29722	66817	35474	79749	1486,0	90.65	23,12	50.97	✓
RV 20000 - 038 - A	38	1.50	186	7.32	148	5.83			30681	68973	37002	83184	1656,0	101.02	23,84	52.56	✓
RV 20000 - 050 - A	50	1.97	210	8.27	160	6.30			32220	72433	39486	88768	1995,0	121.70	25,26	55.69	✓
RV 20000 - 063 - A	63	2.48	236	9.29	173	6.81			33486	75280	41560	93431	2362,0	144.08	26,80	59.08	✓
RV 20000 - 075 - A	75	2.95	260	10.24	185	7.28			34403	77341	43077	96841	2702,0	164.82	28,22	62.21	✓
RV 20000 - 080 - A	80	3.15	270	10.63	190	7.48	150 bar *2175 psi* + 20 °C *+68 °F*		34731	78079	43624	98071	2843,0	173.42	28,81	63.52	✓
RV 20000 - 100 - A	100	3.94	310	12.21	210	8.27			35811	80506	45434	102140	3409,0	207.95	31,19	68.76	✓
RV 20000 - 125 - A	125	4.92	360	14.17	235	9.25			36794	82716	47097	105878	4116,0	251.08	34,16	75.31	✓

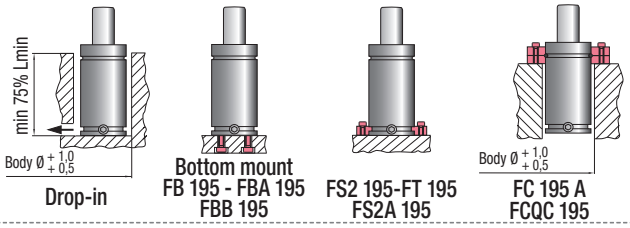

HOW TO ORDER p. 57

INSTALLATION GUIDELINE p. 203

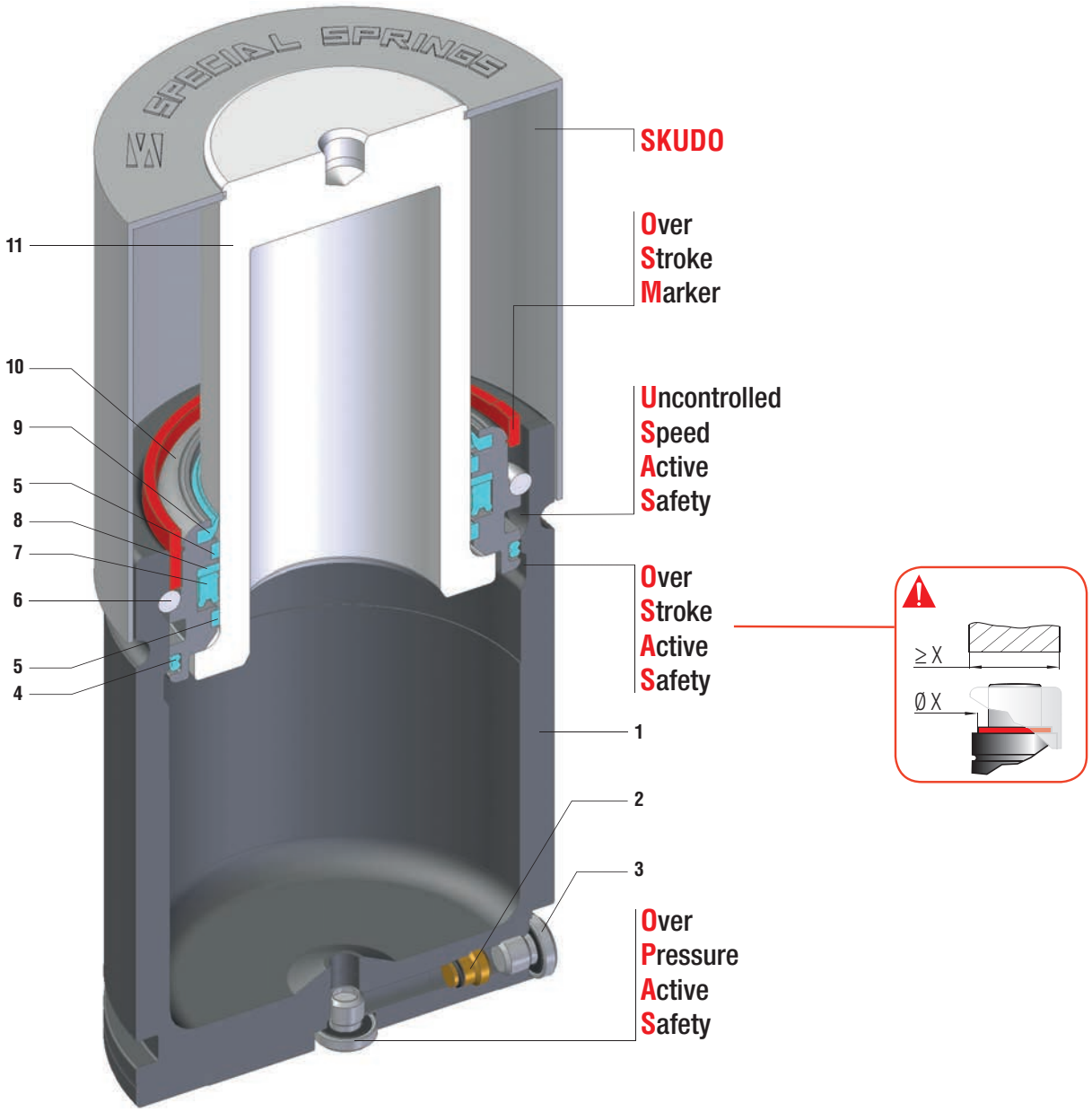

Minima altezza, massima forza + SKUDO - Minimum height, maximum force + SKUDO - Minimale Höhe, maximale Kraft + SKUDO
Hauteur minimale, force maximale + SKUDO - Mínima altura, máxima fuerza + SKUDO - Altura mínima, força máxima + SKUDO

SEALING	ROD SEAL
DESIGN	BUSH - BODY DESIGN

1	Body	**5**	Guide ring	**9**	Rod wiper
2	Valve	**6**	Retaining ring	**10**	Bush
3	Plug	**7**	Rod seal	**11**	Rod (nitrited superfinished)
4	Dual ring seal	**8**	Back-up ring		

RANGE CHART

Model	Body Ø		Stroke Cu		Initial force F0		OSAS	USAS	OPAS	SKUDO
	mm	*inch*	mm	*inch*	daN	*lb*				
RS 170	19	*0.75*	7 - 122	*0.28 - 4.80*	170	*382*	✓	✓	✓	✓
RS 320	25	*0.98*	7 - 122	*0.28 - 4.80*	320	*719*	✓	✓	✓	✓
RS 350	32	*1.26*	7 - 122	*0.28 - 4.80*	360	*809*	✓	✓	✓	✓
RS 500	38	*1.50*	7 - 122	*0.28 - 4.80*	470	*1057*	✓	✓	✓	✓
RS 750	45	*1.77*	7 - 122	*0.28 - 4.80*	740	*1664*	✓	✓	✓	✓
RS 1000	50	*1.97*	10 - 122	*0.39 - 4.80*	920	*2068*	✓	✓	✓	✓
RS 1200	50	*1.97*	10 - 122	*0.39 - 4.80*	1060	*2383*	✓	✓	✓	✓
RS 1500	63	*2.48*	10 - 122	*0.39 - 4.80*	1530	*3440*	✓	✓	✓	✓
RS 2400	75	*2.95*	13 - 122	*0.51 - 4.80*	2385	*5362*	✓	✓	✓	✓
RS 4200	95	*3.74*	13 - 122	*0.51 - 4.80*	4240	*9532*	✓	✓	✓	✓
RS 6600	120	*4.72*	13 - 122	*0.51 - 4.80*	6630	*14905*	✓	✓	✓	✓
RS 9500	150	*5.91*	16 - 122	*0.63 - 4.80*	9540	*21447*	✓	✓	✓	✓

HOW TO ORDER

Series

Revision code

Model

RS 2400-047-A-E

Stroke

Version

Available versions

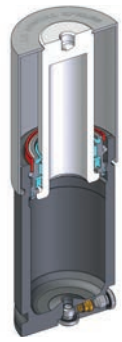

RS 2400-047-A

Standard code

Self contained

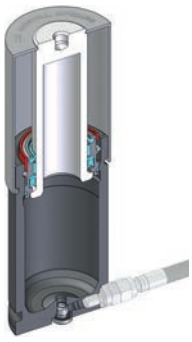

RS 2400-047-A-N

Add "-N" to standard code

Linkable

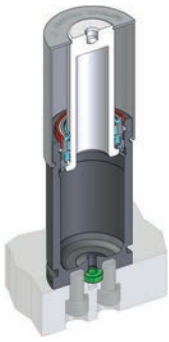

RS 2400-047-A-E

Add "-E" to standard code

Easy Manifold

RS 170

SPECIAL SPRINGS

Il nuovo codice sarà fornito solo ad esaurimento del vecchio - The new code will be supplied only when the old will be out of stock - Der neue Kode wird geliefert nur wenn der alte nicht mehr im Lager ist - Le nouveau code sera fourni uniquement lorsque le vieux stock sera ecoulé - El nuevo código será suministrado sólo cuando el viejo está fuera de stock - O novo código irá ser fornecido apenas quando o antigo esgotar stock

ACTIVE SAFETY

OSAS

USAS

OPAS

SKUDO

easy MANIFOLD p. 241

* $F1_i$ = Isothermal end force at 100% Cu p. 18

** $F1_p$ = Polytrophic end force at 100% Cu

NOT FOR

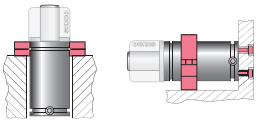

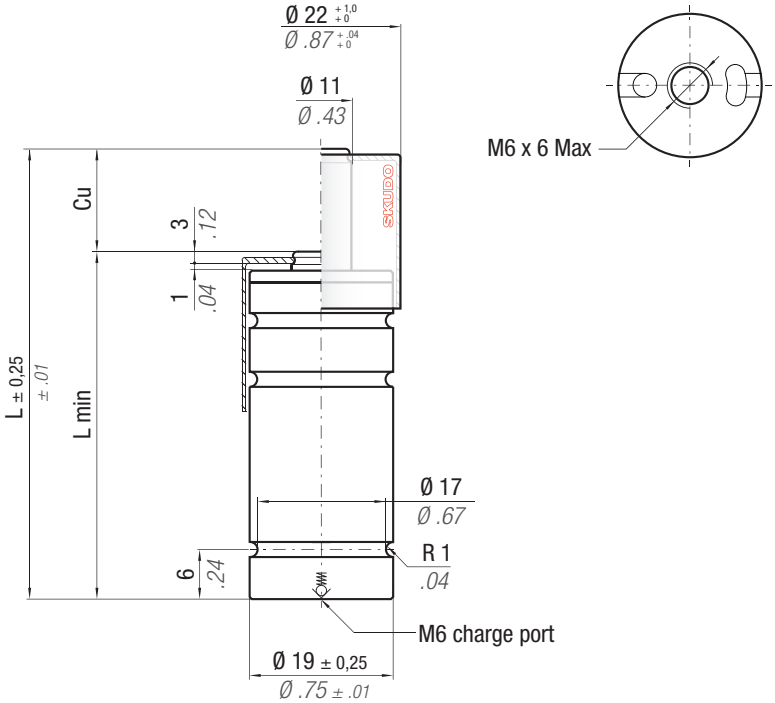

N_2	°F 32 - 176 / °C 0 - 80	ΔP	P max	P min	S	SPM	Max Speed	Maintenance kit
		± 0,33 %/°C	180 bar *2610 psi*	20 bar *290 psi*	0,95 cm² *0.147 in²*	~ 40 - 100 (at 20°C)	1,8 m/s	Disposable

CODE PHASING OUT from 05/2019	NEW	Cu mm	Cu inch	L mm	L inch	L min mm	L min inch	Fo Initial force daN	Fo lb	$F1_i$ * End force daN	$F1_i$ lb	$F1_p$ ** End force daN	$F1_p$ lb	Vo cm³	Vo in³	~Kg	~lb	PED 2014/68/EU
RS 170 - 007 - B	RS 170 - 007 - C	7	0.28	50	1.97	43	1.69	170 ± 5%	382	239	537	271	609	3,0	0.18	0,06	0.13	✓
RS 170 - 010 - B	RS 170 - 010 - C	10	0.39	56	2.20	46	1.81			253	569	290	652	4,0	0.24	0,07	0.14	✓
RS 170 - 012 - B	RS 170 - 012 - C	12	0.47	60	2.36	48	1.89			260	585	300	674	4,0	0.24	0,07	0.15	✓
RS 170 - 016 - B	RS 170 - 016 - C	16	0.63	68	2.68	52	2.05			271	609	316	710	5,0	0.31	0,07	0.16	✓
RS 170 - 022 - B	RS 170 - 022 - C	22	0.87	80	3.15	58	2.28			281	632	331	744	7,0	0.43	0,08	0.17	✓
RS 170 - 029 - B	RS 170 - 029 - C	29	1.14	94	3.70	65	2.56			290	652	344	773	8,0	0.49	0,09	0.19	✓
RS 170 - 035 - B	RS 170 - 035 - C	35	1.38	106	4.17	71	2.80	180 bar *2610psi*		295	663	351	789	10,0	0.61	0,09	0.21	✓
RS 170 - 047 - B	RS 170 - 047 - C	47	1.85	130	5.12	83	3.27			301	677	361	812	13,0	0.79	0,11	0.24	✓
RS 170 - 060 - B	RS 170 - 060 - C	60	2.36	156	6.14	96	3.78			306	688	368	827	16,0	0.98	0,12	0.27	✓
RS 170 - 072 - B	RS 170 - 072 - C	72	2.83	185	7.28	113	4.45	+ 20 °C *+68 °F*		309	695	372	836	19,0	1.16	0,14	0.31	✓
RS 170 - 077 - B	RS 170 - 077 - C	77	3.03	195	7.68	118	4.65			310	697	374	841	21,0	1.28	0,15	0.32	✓
RS 170 - 097 - B	RS 170 - 097 - C	97	3.82	235	9.25	138	5.43			313	704	378	850	25,0	1.53	0,17	0.37	✓
RS 170 - 122 - B	RS 170 - 122 - C	122	4.80	285	11.22	163	6.42			315	708	382	859	31,0	1.89	0,19	0.43	✓

WARNING REMOVE SKUDO

Upside down mounting

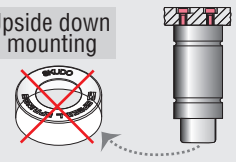

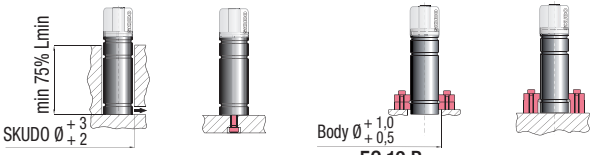

Drop-in | Bottom mount | FC 19 B FCC 19 A | FS3 19

HOW TO ORDER p. 73

INSTALLATION GUIDELINE p. 203

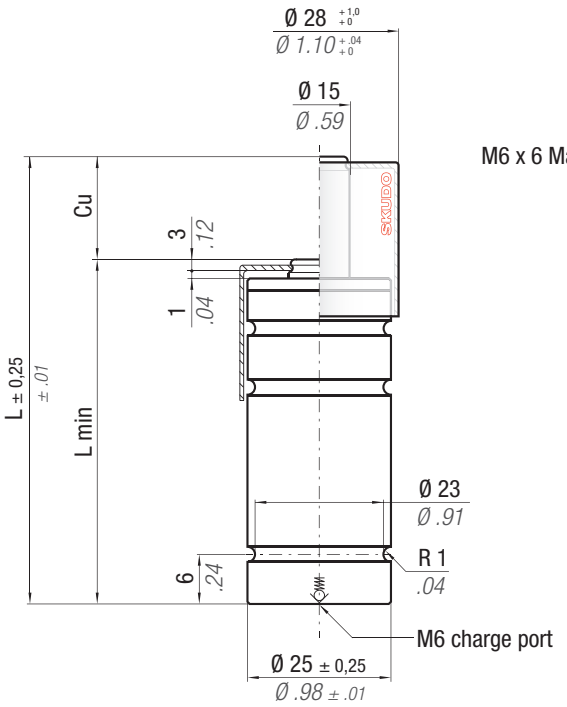

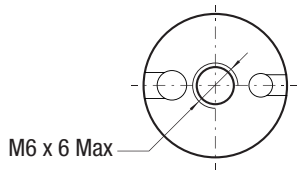

Il nuovo codice sarà fornito solo ad esaurimento del vecchio

The new code will be supplied only when the old will be out of stock

Der neue Kode wird geliefert nur wenn der alte nicht mehr im Lager ist

Le nouveau code sera fourni uniquement lorsque le vieux stock sera ecoulé

El nuevo código será suministrado sólo cuando el viejo está fuera de stock

O novo código irá ser fornecido apenas quando o antigo esgotar stock

*** $F1_i$ =** Isothermal end force at 100% Cu p. 18

**** $F1_p$ =** Polytrophic end force at 100% Cu

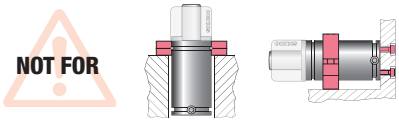

ACTIVE SAFETY

OSAS

USAS

OPAS

SKUDO

RS

N2	°F 32 - 176 / °C 0 - 80	ΔP	P max	P min	S	SPM	Max Speed	Maintenance kit
		± 0,33 %/°C	180 bar *2610 psi*	20 bar *290 psi*	1,77 cm² *0.27 in²*	~ 40 - 100 (at 20°C)	1,8 m/s	Disposable

CODE PHASING OUT from 01/2020	NEW	Cu mm	Cu inch	L mm	L inch	L min mm	L min inch	F0 Initial force daN	F0 lb	$F1_i$ * End force daN	$F1_i$ lb	$F1_p$ ** End force daN	$F1_p$ lb	V0 cm³	V0 in³	~Kg	~lb	PED 2014/68/EU
RS 320 - 007 - B	RS 320 - 007 - C	7	0.28	50	1.97	43	1.69	320 ± 5%	*719*	424	*953*	474	*1066*	6,0	*0.37*	0,10	*0.23*	✓
RS 320 - 010 - B	RS 320 - 010 - C	10	0.39	56	2.20	46	1.81			448	*1007*	508	*1142*	7,0	*0.43*	0,11	*0.24*	✓
RS 320 - 012 - B	RS 320 - 012 - C	12	0.47	60	2.36	48	1.89			461	*1036*	526	*1182*	8,0	*0.49*	0,11	*0.25*	✓
RS 320 - 016 - B	RS 320 - 016 - C	16	0.63	68	2.68	52	2.05			481	*1081*	554	*1245*	10,0	*0.61*	0,12	*0.26*	✓
RS 320 - 022 - B	RS 320 - 022 - C	22	0.87	80	3.15	58	2.28			501	*1126*	584	*1313*	13,0	*0.79*	0,13	*0.29*	✓
RS 320 - 029 - B	RS 320 - 029 - C	29	1.14	94	3.70	65	2.56			518	*1165*	608	*1367*	16,0	*0.98*	0,14	*0.31*	✓
RS 320 - 035 - B	RS 320 - 035 - C	35	1.38	106	4.17	71	2.80	180 bar	*2610psi*	528	*1187*	623	*1401*	19,0	*1.16*	0,15	*0.33*	✓
RS 320 - 047 - B	RS 320 - 047 - C	47	1.85	130	5.12	83	3.27			542	*1218*	643	*1446*	24,0	*1.46*	0,17	*0.38*	✓
RS 320 - 060 - B	RS 320 - 060 - C	60	2.36	156	6.14	96	3.78			551	*1239*	658	*1479*	30,0	*1.83*	0,19	*0.43*	✓
RS 320 - 072 - B	RS 320 - 072 - C	72	2.83	185	7.28	113	4.45	+ 20 °C	*+68 °F*	550	*1236*	656	*1475*	36,0	*2.20*	0,22	*0.48*	✓
RS 320 - 077 - B	RS 320 - 077 - C	77	3.03	195	7.68	118	4.65			553	*1243*	660	*1484*	38,0	*2.32*	0,23	*0.50*	✓
RS 320 - 097 - B	RS 320 - 097 - C	97	3.82	235	9.25	138	5.43			560	*1259*	672	*1511*	47,0	*2.87*	0,26	*0.57*	✓
RS 320 - 122 - B	RS 320 - 122 - C	122	4.80	285	11.22	163	6.42			567	*1275*	681	*1531*	59,0	*3.60*	0,30	*0.66*	✓

WARNING
REMOVE SKUDO

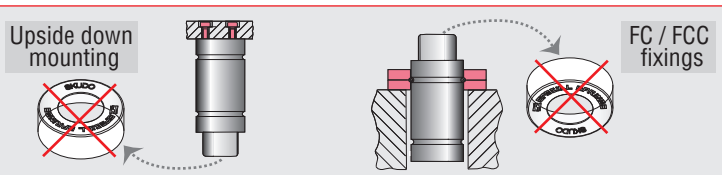

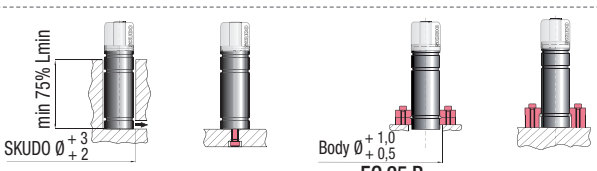

HOW TO ORDER p. 73

INSTALLATION GUIDELINE p. 203

RS 350

SPECIAL SPRINGS

OSAS + OSM = OVER STROKE ACTIVE SAFETY + OVER STROKE MARKER

ACTIVE SAFETY

OSAS

USAS

OPAS

SKUDO

easy MANIFOLD p. 241

* $F1_i$ = Isothermal end force at 100% Cu p. 18

** $F1_p$ = Polytrophic end force at 100% Cu

NOT FOR

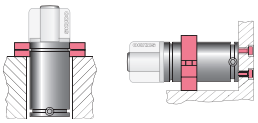

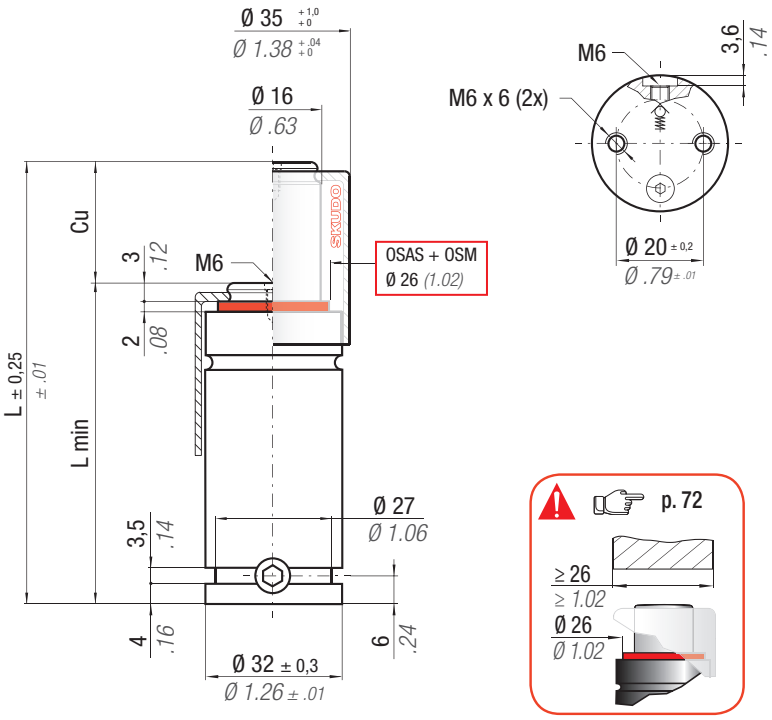

N_2	°F 32 - 176	°C 0 - 80	ΔP	P max	P min	S	SPM	Max Speed	Maintenance kit
			± 0,33 %/°C	180 bar *2610 psi*	20 bar *290 psi*	2,01 cm² *0.312 in²*	~ 20 - 100 (at 20°C)	1,8 m/s	39BMRV00350C

CODE	Cu mm	Cu inch	L mm	L inch	L min mm	L min inch	Fo Initial force daN	Fo lb	$F1_i$ * End force daN	$F1_i$ lb	$F1_p$ ** End force daN	$F1_p$ lb	Vo cm³	Vo in³	~Kg	~lb	PED 2014/68/EU
RS 350 - 007 - A	7	0.28	50	1.97	43	1.69	360 ± 5%	809	458	1030	505	1136	8,0	0.49	0,16	0.36	✓
RS 350 - 010 - A	10	0.39	56	2.20	46	1.81			478	1075	533	1199	10,0	0.61	0,17	0.38	✓
RS 350 - 013 - A	13	0.51	62	2.44	49	1.93			493	1109	554	1245	12,0	0.73	0,18	0.40	✓
RS 350 - 016 - A	16	0.63	68	2.68	52	2.05			505	1134	570	1282	14,0	0.85	0,19	0.42	✓
RS 350 - 022 - A	22	0.87	80	3.15	58	2.28			521	1171	593	1333	18,0	1.10	0,21	0.46	✓
RS 350 - 029 - A	29	1.14	94	3.70	65	2.56			533	1199	611	1374	22,0	1.34	0,23	0.51	✓
RS 350 - 035 - A	35	1.38	106	4.17	71	2.80	180 bar *2610 psi*		541	1216	622	1399	26,0	1.59	0,25	0.55	✓
RS 350 - 047 - A	47	1.85	130	5.12	83	3.27			552	1240	637	1432	33,0	2.01	0,29	0.63	✓
RS 350 - 060 - A	60	2.36	156	6.14	96	3.78			559	1256	648	1456	41,0	2.50	0,33	0.72	✓
RS 350 - 072 - A	72	2.83	180	7.09	108	4.25	+ 20 °C *+68 °F*		563	1266	654	1471	49,0	2.99	0,36	0.80	✓
RS 350 - 077 - A	77	3.03	190	7.48	113	4.45			565	1270	657	1476	52,0	3.17	0,38	0.83	✓
RS 350 - 097 - A	97	3.82	230	9.06	133	5.24			570	1281	663	1492	65,0	3.97	0,44	0.96	✓
RS 350 - 122 - A	122	4.80	280	11.02	158	6.22			574	1289	669	1504	80,0	4.88	0,51	1.13	✓

WARNING
REMOVE SKUDO

Upside down mounting

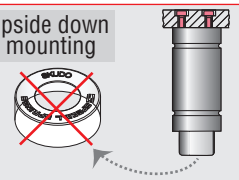

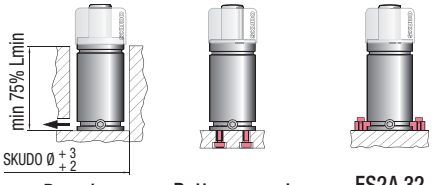

Drop-in | Bottom mount | FS2A 32 FS2B 32

HOW TO ORDER p. 73

INSTALLATION GUIDELINE p. 203

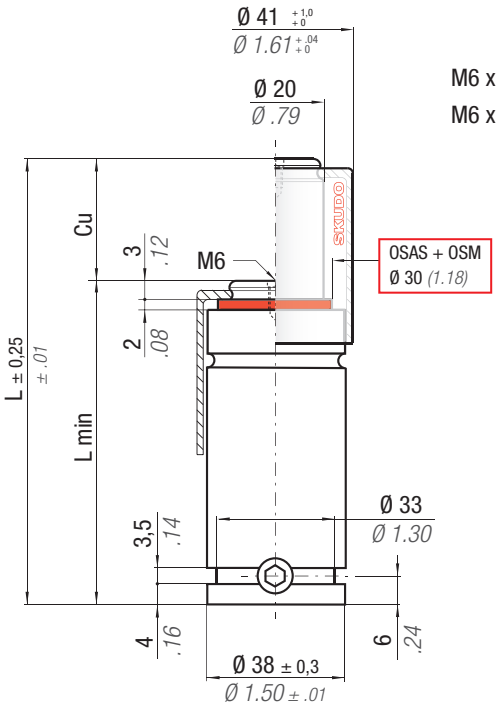

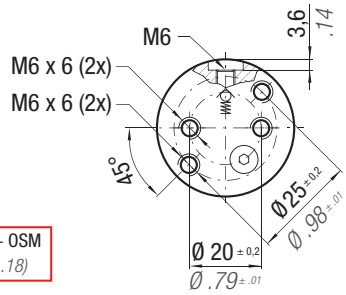

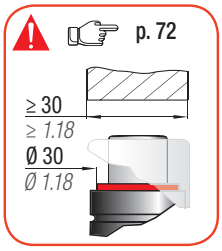

OSAS + OSM = OVER STROKE ACTIVE SAFETY + OVER STROKE MARKER

easy MANIFOLD p. 241

* $F1_i$ = Isothermal end force at 100% Cu p. 18

** $F1_p$ = Polytrophic end force at 100% Cu

NOT FOR

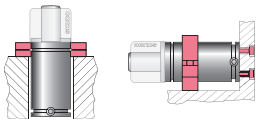

ACTIVE SAFETY

OSAS

USAS

OPAS

SKUDO

RS

N_2	°F 32 - 176	°C 0 ~ 80	ΔP	P max	P min	S	SPM	Max Speed	Maintenance kit
			± 0,33 %/°C	150 bar *2175 psi*	20 bar *290 psi*	3,14 cm² *0.487 in²*	~ 20 - 100 (at 20°C)	1,8 m/s	39BMRV00500C

CODE	Cu mm	Cu inch	L mm	L inch	L min mm	L min inch	F0 Initial force daN	F0 lb	$F1_i$ * End force daN	$F1_i$ lb	$F1_p$ ** End force daN	$F1_p$ lb	V0 cm³	V0 in³	~Kg	~lb	PED 2014/68/EU
RS 500 - 007 - A	7	0.28	50	1.97	43	1.69	470 ± 5%	1057	609	1370	694	1560	11,0	0.67	0,24	0.53	✓
RS 500 - 010 - A	10	0.39	56	2.20	46	1.81			639	1437	739	1661	14,0	0.85	0,25	0.55	✓
RS 500 - 013 - A	13	0.51	62	2.44	49	1.93			661	1486	773	1738	17,0	1.04	0,26	0.57	✓
RS 500 - 016 - A	16	0.63	68	2.68	52	2.05			678	1524	800	1798	19,0	1.16	0,28	0.62	✓
RS 500 - 022 - A	22	0.87	80	3.15	58	2.28			703	1579	838	1884	24,0	1.46	0,31	0.68	✓
RS 500 - 029 - A	29	1.14	94	3.70	65	2.56			722	1622	868	1951	30,0	1.83	0,34	0.75	✓
RS 500 - 035 - A	35	1.38	106	4.17	71	2.80			733	1648	887	1994	35,0	2.14	0,37	0.82	✓
RS 500 - 047 - A	47	1.85	130	5.12	83	3.27	150 bar *2175psi*		749	1684	913	2053	46,0	2.81	0,42	0.93	✓
RS 500 - 060 - A	60	2.36	156	6.14	96	3.78			760	1709	931	2093	57,0	3.48	0,48	1.06	✓
RS 500 - 072 - A	72	2.83	180	7.09	108	4.25			767	1725	942	2118	67,0	4.09	0,54	1.19	✓
RS 500 - 077 - A	77	3.03	190	7.48	113	4.45	+ 20 °C *+68 °F*		770	1730	946	2127	72,0	4.39	0,56	1.23	✓
RS 500 - 097 - A	97	3.82	230	9.06	133	5.24			777	1747	958	2154	89,0	5.43	0,66	1.46	✓
RS 500 - 122 - A	122	4.80	280	11.02	158	6.22			783	1760	968	2176	110,0	6.71	0,77	1.70	✓

WARNING
REMOVE SKUDO

Upside down mounting

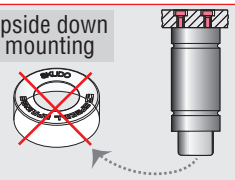

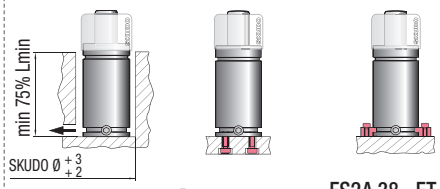

Drop-in | Bottom mount | FS2A 38 - FT 38 FS2B 38 - FTP 38

HOW TO ORDER p. 73

INSTALLATION GUIDELINE p. 203

RS 750

SPECIAL SPRINGS

OSAS + OSM = OVER STROKE ACTIVE SAFETY + OVER STROKE MARKER

ACTIVE SAFETY

easy MANIFOLD p. 241

OSAS

USAS

OPAS

SKUDO

* $F1_i$ = Isothermal end force at 100% Cu p. 18

** $F1_p$ = Polytrophic end force at 100% Cu

NOT FOR

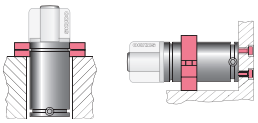

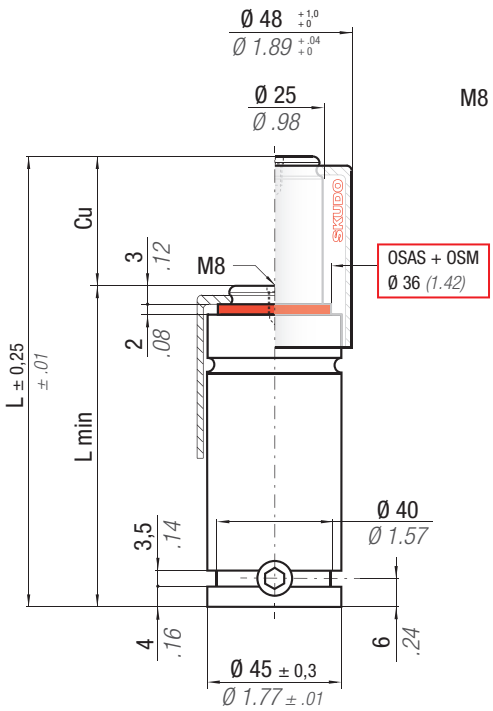

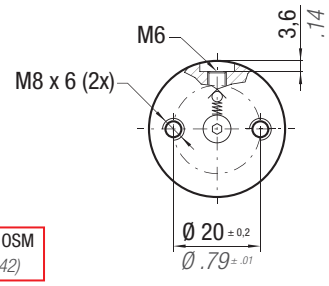

p. 72

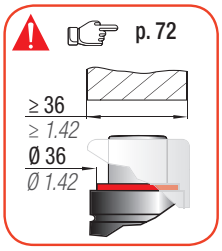

N_2	°F 32 - 176	°C 0 - 80	ΔP	P max	P min	S	SPM	Max Speed	Maintenance kit
			± 0,33 %/°C	150 bar *2175 psi*	20 bar *290 psi*	4,91 cm² *0.761 in²*	~ 20 - 100 (at 20°C)	1,8 m/s	39BMRV00750C

CODE	Cu mm	Cu inch	L mm	L inch	L min mm	L min inch	F0 Initial force daN	F0 lb	$F1_i$ * End force daN	$F1_i$ lb	$F1_p$ ** End force daN	$F1_p$ lb	V0 cm³	V0 in³	~Kg	~lb	PED 2014/68/EU
RS 750 - 007 - A	7	0.28	52	2.05	45	1.77	740 ± 5%	1664	956	2148	1090	2450	18,0	1.10	0,36	0.79	✓
RS 750 - 010 - A	10	0.39	58	2.28	48	1.89			1006	2262	1166	2621	21,0	1.28	0,38	0.84	✓
RS 750 - 013 - A	13	0.51	64	2.52	51	2.01			1044	2347	1225	2754	25,0	1.53	0,39	0.86	✓
RS 750 - 016 - A	16	0.63	70	2.76	54	2.13			1074	2414	1272	2860	29,0	1.77	0,41	0.90	✓
RS 750 - 022 - A	22	0.87	82	3.23	60	2.36			1117	2511	1340	3012	37,0	2.26	0,45	0.99	✓
RS 750 - 029 - A	29	1.14	96	3.78	67	2.64			1151	2588	1395	3136	46,0	2.81	0,50	1.10	✓
RS 750 - 035 - A	35	1.38	108	4.25	73	2.87	150 bar *2175psi*		1173	2636	1429	3213	53,0	3.23	0,54	1.19	✓
RS 750 - 047 - A	47	1.85	132	5.20	85	3.35			1202	2702	1477	3320	68,0	4.15	0,61	1.34	✓
RS 750 - 060 - A	60	2.36	158	6.22	98	3.86			1223	2748	1511	3397	85,0	5.19	0,70	1.54	✓
RS 750 - 072 - A	72	2.83	182	7.17	110	4.33	+ 20 °C *+68 °F*		1236	2778	1533	3446	100,0	6.10	0,77	1.70	✓
RS 750 - 077 - A	77	3.03	192	7.56	115	4.53			1240	2788	1540	3462	107,0	6.53	0,81	1.79	✓
RS 750 - 097 - A	97	3.82	232	9.13	135	5.31			1254	2819	1563	3514	132,0	8.05	0,93	2.05	✓
RS 750 - 122 - A	122	4.80	282	11.10	160	6.30			1266	2845	1582	3556	164,0	10.00	1,10	2.43	✓

WARNING
REMOVE SKUDO

Upside down mounting

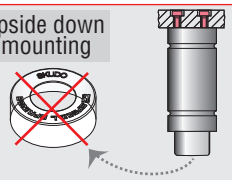

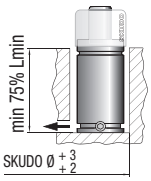

Drop-in

Bottom mount
FB 45 - FBA 45
FBB 45 - FBD 45

FS2 45 - FT 45
FS2A 45 - FTP 45

HOW TO ORDER p. 73

INSTALLATION GUIDELINE p. 203

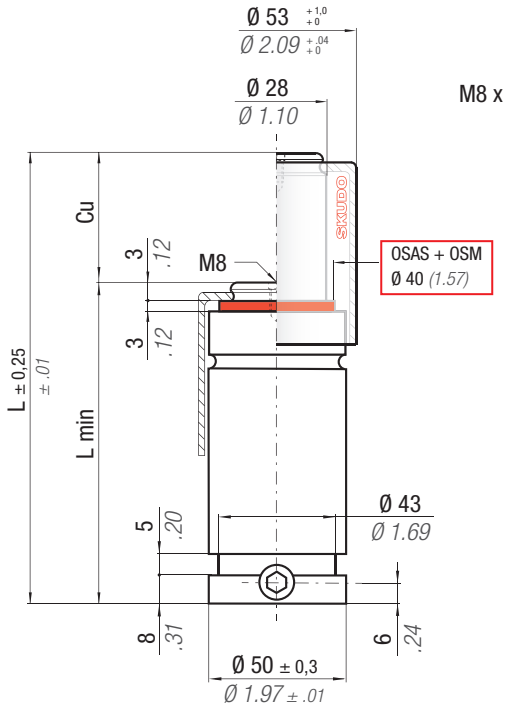

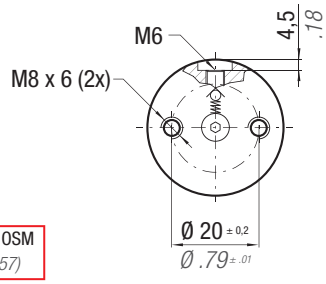

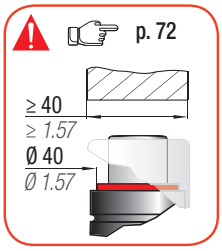

OSAS + OSM = OVER STROKE ACTIVE SAFETY + OVER STROKE MARKER

easy MANIFOLD p. 241

* $F1_i$ = Isothermal end force at 100% Cu p. 18

** $F1_p$ = Polytrophic end force at 100% Cu

NOT FOR

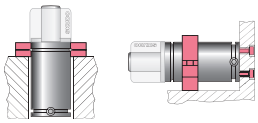

ACTIVE SAFETY

OSAS

USAS

OPAS

SKUDO

RS

N2	°F 32 - 176	°C 0 ~ 80	ΔP	P max	P min	S	SPM	Max Speed	Maintenance kit
			± 0,33 %/°C	150 bar *2175 psi*	20 bar *290 psi*	6,15 cm² *0.953 in²*	~ 20 - 100 (at 20°C)	1,8 m/s	39BMRV01000C

CODE	Cu mm	Cu *inch*	L mm	L *inch*	L min mm	L min *inch*	F0 Initial force daN	F0 *lb*	$F1_i$ * End force daN	$F1_i$ *lb*	$F1_p$ ** End force daN	$F1_p$ *lb*	V0 cm³	V0 *in³*	~Kg	~*lb*	PED 2014/68/EU
RS 1000 - 010 - A	10	*0.39*	64	*2.52*	54	*2.13*	920 ± 5%	*2068*	1222	*2748*	1402	*3152*	29,0	*1.77*	0,51	*1.12*	✓
RS 1000 - 013 - A	13	*0.51*	70	*2.76*	57	*2.24*			1270	*2856*	1476	*3318*	34,0	*2.07*	0,54	*1.19*	✓
RS 1000 - 016 - A	16	*0.63*	76	*2.99*	60	*2.36*			1309	*2943*	1536	*3453*	39,0	*2.38*	0,56	*1.23*	✓
RS 1000 - 022 - A	22	*0.87*	88	*3.46*	66	*2.60*			1368	*3075*	1628	*3660*	48,0	*2.93*	0,61	*1.34*	✓
RS 1000 - 029 - A	29	*1.14*	102	*4.02*	73	*2.87*			1416	*3183*	1705	*3833*	59,0	*3.60*	0,67	*1.48*	✓
RS 1000 - 035 - A	35	*1.38*	114	*4.49*	79	*3.11*			1446	*3252*	1754	*3943*	69,0	*4.21*	0,71	*1.57*	✓
RS 1000 - 047 - A	47	*1.85*	138	*5.43*	91	*3.58*			1490	*3349*	1824	*4101*	88,0	*5.37*	0,81	*1.79*	✓
RS 1000 - 060 - A	60	*2.36*	164	*6.46*	104	*4.09*			1521	*3419*	1875	*4215*	108,0	*6.59*	0,91	*2.01*	✓
RS 1000 - 072 - A	72	*2.83*	188	*7.40*	116	*4.57*			1542	*3466*	1908	*4289*	127,0	*7.75*	1,05	*2.31*	✓
RS 1000 - 077 - A	77	*3.03*	198	*7.80*	121	*4.76*			1549	*3481*	1920	*4316*	135,0	*8.24*	1,09	*2.40*	✓
RS 1000 - 097 - A	97	*3.82*	238	*9.37*	141	*5.55*			1570	*3530*	1956	*4397*	166,0	*10.13*	1,21	*2.67*	✓
RS 1000 - 122 - A	122	*4.80*	288	*11.34*	166	*6.54*			1588	*3571*	1986	*4465*	205,0	*12.51*	1,41	*3.11*	✓

WARNING
REMOVE SKUDO

Upside down mounting

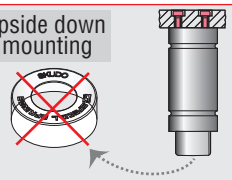

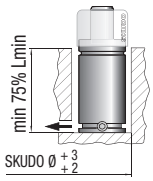

Drop-in

Bottom mount
FB 50 - FBA 50
FBB 50 - FBD 50

FS2 50 - FT 50
FS2A 50 - FTP 50

HOW TO ORDER p. 73

INSTALLATION GUIDELINE p. 203

RS 1200

SPECIAL SPRINGS

OSAS + OSM = OVER STROKE ACTIVE SAFETY + OVER STROKE MARKER

ACTIVE SAFETY

OSAS

USAS

OPAS

SKUDO

easy MANIFOLD p. 241

* $F1_i$ = Isothermal end force at 100% Cu p. 18

** $F1_p$ = Polytrophic end force at 100% Cu

NOT FOR

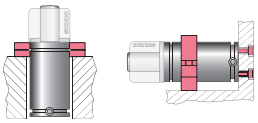

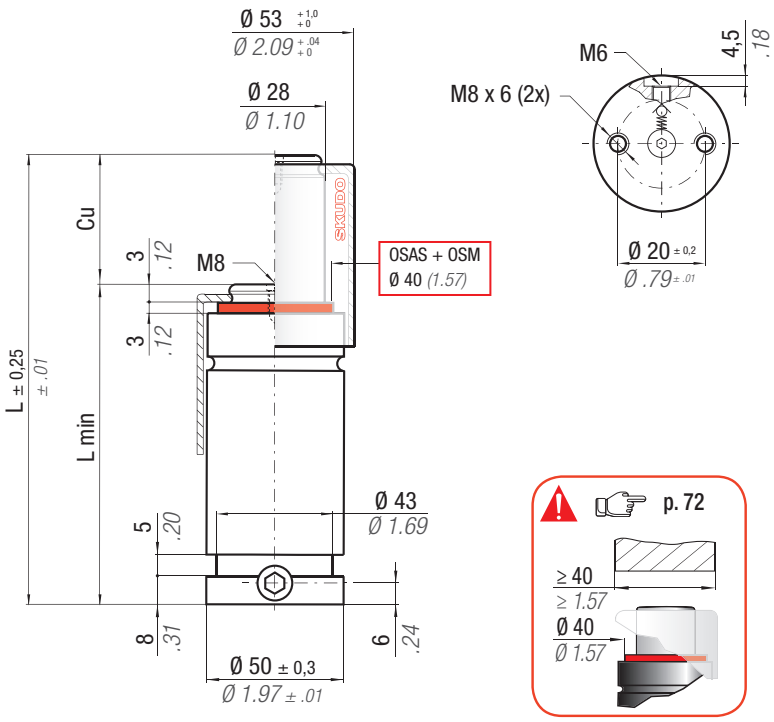

N2	°F 32 - 176 / °C 0 - 80	ΔP	P max	P min	S	SPM	Max Speed	Maintenance kit
		± 0,33 %/°C	170 bar *2465 psi*	20 bar *290 psi*	6,15 cm² *0.953 in²*	~ 20 - 100 (at 20°C)	1,8 m/s	39BMRV01000C

CODE	Cu mm	Cu inch	L mm	L inch	L min mm	L min inch	Fo Initial force daN	Fo lb	$F1_i$ * End force daN	$F1_i$ lb	$F1_p$ ** End force daN	$F1_p$ lb	Vo cm³	Vo in³	~Kg	~lb	PED 2014/68/EU
RS 1200 - 010 - A	10	0.39	64	2.52	54	2.13	1060 ± 5%	2383	1401	3150	1581	3554	29,0	1.77	0,51	1.12	✓
RS 1200 - 013 - A	13	0.51	70	2.76	57	2.24			1458	3278	1664	3741	34,0	2.07	0,54	1.19	✓
RS 1200 - 016 - A	16	0.63	76	2.99	60	2.36			1505	3383	1732	3893	39,0	2.38	0,56	1.23	✓
RS 1200 - 022 - A	22	0.87	88	3.46	66	2.60			1575	3540	1836	4127	48,0	2.93	0,61	1.34	✓
RS 1200 - 029 - A	29	1.14	102	4.02	73	2.87			1633	3670	1922	4321	59,0	3.60	0,67	1.48	✓
RS 1200 - 035 - A	35	1.38	114	4.49	79	3.11	170 bar *2465 psi*		1669	3753	1977	4445	69,0	4.21	0,71	1.57	✓
RS 1200 - 047 - A	47	1.85	138	5.43	91	3.58			1721	3870	2056	4622	88,0	5.37	0,81	1.79	✓
RS 1200 - 060 - A	60	2.36	164	6.46	104	4.09			1759	3954	2114	4752	108,0	6.59	0,91	2.01	✓
RS 1200 - 072 - A	72	2.83	188	7.40	116	4.57	+ 20 °C *+68 °F*		1784	4010	2152	4837	127,0	7.75	1,05	2.31	✓
RS 1200 - 077 - A	77	3.03	198	7.80	121	4.76			1792	4029	2165	4866	135,0	8.24	1,09	2.40	✓
RS 1200 - 097 - A	97	3.82	238	9.37	141	5.55			1818	4087	2205	4957	166,0	10.13	1,21	2.67	✓
RS 1200 - 122 - A	122	4.80	288	11.34	166	6.54			1840	4136	2239	5033	205,0	12.51	1,41	3.11	✓

WARNING REMOVE SKUDO

Upside down mounting

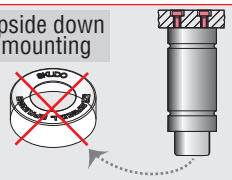

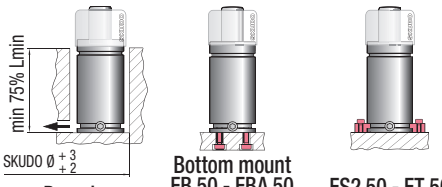

Drop-in

Bottom mount
FB 50 - FBA 50
FBB 50 - FBD 50

FS2 50 - FT 50
FS2A 50 - FTP 50

HOW TO ORDER p. 73

INSTALLATION GUIDELINE p. 203

RS 1500

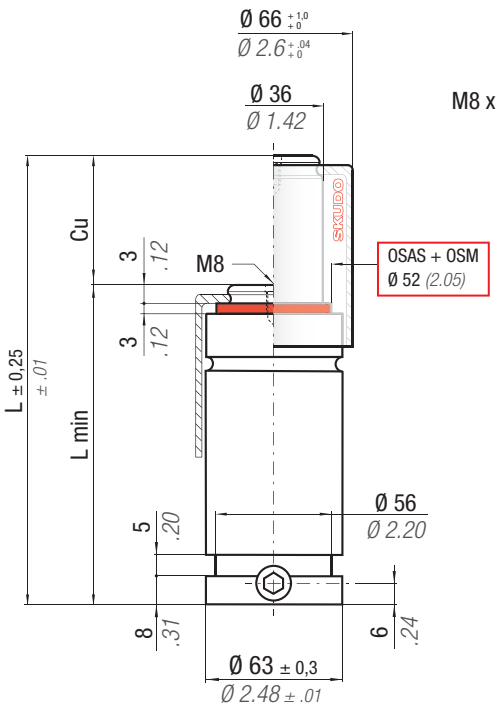

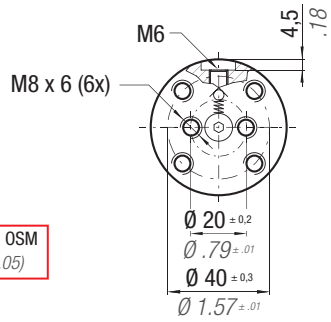

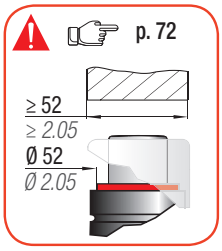

OSAS + OSM = OVER STROKE ACTIVE SAFETY + OVER STROKE MARKER

Il nuovo codice sarà fornito solo ad esaurimento del vecchio

The new code will be supplied only when the old will be out of stock

Der neue Kode wird geliefert nur wenn der alte nicht mehr im Lager ist

Le nouveau code sera fourni uniquement lorsque le vieux stock sera ecoulé

El nuevo código será suministrado sólo cuando el viejo está fuera de stock

O novo código irá ser fornecido apenas quando o antigo esgotar stock

easy MANIFOLD p. 241

* $F1_i$ = Isothermal end force at 100% Cu p. 18

** $F1_p$ = Polytrophic end force at 100% Cu

NOT FOR

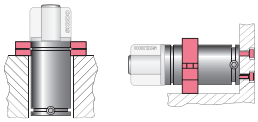

ACTIVE SAFETY

OSAS

USAS

OPAS

SKUDO

RS

N2	°F 32 - 176 / °C 0 - 80	ΔP	P max	P min	S	SPM	Max Speed	Maintenance kit
		± 0,33 %/°C	150 bar *2175 psi*	20 bar *290 psi*	10,18 cm² *1.578 in²*	~ 20 - 100 (at 20°C)	1,8 m/s	39BMRV01500C

CODE PHASING OUT from 11/2019	NEW	Cu mm	Cu inch	L mm	L inch	L min mm	L min inch	F0 Initial force daN	F0 lb	$F1_i$ End force * daN	$F1_i$ lb	$F1_p$ End force ** daN	$F1_p$ lb	V0 cm³	V0 in³	~Kg	~lb	PED 2014/68/EU
RS 1500 - 010 - A	RS 1500 - 010 - B	10	0.39	70	2.76	60	2.36	1530 ± 5%	3440	1970	4428	2241	5038	53,0	3.23	0,92	2.03	✓
RS 1500 - 013 - A	RS 1500 - 013 - B	13	0.51	76	2.99	63	2.48			2045	4597	2355	5294	61,0	3.72	0,96	2.12	✓
RS 1500 - 016 - A	RS 1500 - 016 - B	16	0.63	82	3.23	66	2.60			2106	4735	2450	5508	69,0	4.21	0,99	2.18	✓
RS 1500 - 022 - A	RS 1500 - 022 - B	22	0.87	94	3.70	72	2.83			2201	4947	2596	5836	85,0	5.19	1,06	2.34	✓
RS 1500 - 029 - A	RS 1500 - 029 - B	29	1.14	108	4.25	79	3.11			2279	5124	2720	6115	103,0	6.28	1,14	2.51	✓
RS 1500 - 035 - A	RS 1500 - 035 - B	35	1.38	120	4.72	85	3.35			2330	5238	2801	6297	119,0	7.26	1,21	2.67	✓
RS 1500 - 047 - A	RS 1500 - 047 - B	47	1.85	144	5.67	97	3.82	150 bar *2175 psi*		2402	5401	2917	6558	151,0	9.21	1,35	2.98	✓
RS 1500 - 060 - A	RS 1500 - 060 - B	60	2.36	170	6.69	110	4.33			2455	5520	3003	6751	186,0	11.35	1,51	3.33	✓
RS 1500 - 072 - A	RS 1500 - 072 - B	72	2.83	194	7.64	122	4.80	+ 20 °C *+68 °F*		2490	5599	3060	6879	217,0	13.24	1,65	3.64	✓
RS 1500 - 077 - A	RS 1500 - 077 - B	77	3.03	204	8.03	127	5.00			2502	5625	3079	6922	231,0	14.09	1,71	3.77	✓
RS 1500 - 097 - A	RS 1500 - 097 - B	97	3.82	244	9.61	147	5.79			2540	5709	3141	7061	284,0	17.32	1,94	4.28	✓
RS 1500 - 122 - A	RS 1500 - 122 - B	122	4.80	294	11.57	172	6.77			2571	5780	3193	7178	350,0	21.35	2,23	4.92	✓

WARNING
REMOVE SKUDO

Upside down mounting

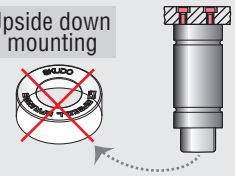

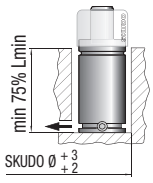

Drop-in

Bottom mount - FB 50 - FB 63
FB 75 - FBA 50 - FBA 75 - FBB 50
FBB 63 - FBB 75 - FBD 50 - FBD 75

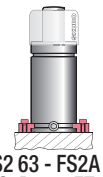

FS2 63 - FS2A 63
FS2B 63 - FT 63
FTP 63

HOW TO ORDER p. 73

INSTALLATION GUIDELINE p. 203

RS 2400

SPECIAL SPRINGS

OSAS + OSM = OVER STROKE ACTIVE SAFETY + OVER STROKE MARKER

ACTIVE SAFETY

easy MANIFOLD p. 241

OSAS

USAS

OPAS

SKUDO

* $F1_i$ = Isothermal end force at 100% Cu p. 18

** $F1_p$ = Polytrophic end force at 100% Cu

NOT FOR

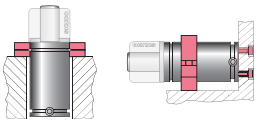

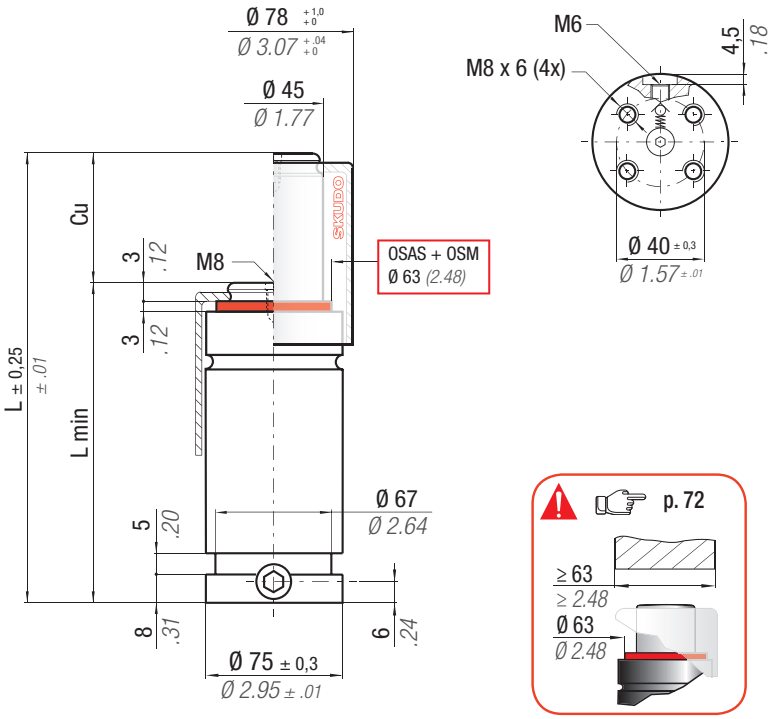

N2	°F 32 - 176 / °C 0 - 80	ΔP	P max	P min	S	SPM	Max Speed	Maintenance kit
		± 0,33 %/°C	150 bar *2175 psi*	20 bar *290 psi*	15,90 cm² *2.465 in²*	~ 20 - 100 (at 20°C)	1,8 m/s	39BMRV02400D

CODE	Cu mm	Cu *inch*	L mm	L *inch*	L min mm	L min *inch*	Fo Initial force daN	Fo *lb*	$F1_i$ * End force daN	$F1_i$ *lb*	$F1_p$ ** End force daN	$F1_p$ *lb*	Vo cm³	Vo *in³*	~Kg	*~lb*	PED 2014/68/EU
RS 2400 - 013 - A	13	*0.51*	77	*3.03*	64	*2.52*	2385 ± 5%	*5362*	3220	*7238*	3718	*8358*	93,0	*5.67*	1,36	*3,00*	✓
RS 2400 - 016 - A	16	*0.63*	83	*3.27*	67	*2.64*			3320	*7465*	3873	*8707*	105,0	*6.41*	1,40	*3,09*	✓
RS 2400 - 022 - A	22	*0.87*	95	*3.74*	73	*2.87*			3476	*7814*	4115	*9251*	129,0	*7.87*	1,50	*3,31*	✓
RS 2400 - 029 - A	29	*1.14*	109	*4.29*	80	*3.15*			3606	*8107*	4322	*9716*	157,0	*9.58*	1,61	*3,55*	✓
RS 2400 - 035 - A	35	*1.38*	121	*4.76*	86	*3.39*			3690	*8296*	4456	*10017*	181,0	*11.04*	1,70	*3,75*	✓
RS 2400 - 047 - A	47	*1.85*	145	*5.71*	98	*3.86*	150 bar *2175 psi*		3811	*8568*	4651	*10456*	230,0	*14.03*	1,89	*4,17*	✓
RS 2400 - 060 - A	60	*2.36*	171	*6.73*	111	*4.37*			3900	*8768*	4796	*10782*	282,0	*17.20*	2,09	*4,61*	✓
RS 2400 - 072 - A	72	*2.83*	195	*7.68*	123	*4.84*			3959	*8900*	4892	*10998*	330,0	*20.13*	2,28	*5,03*	✓
RS 2400 - 077 - A	77	*3.03*	205	*8.07*	128	*5.04*	+ 20 °C *+68 °F*		3979	*8946*	4925	*11072*	350,0	*21.35*	2,36	*5,20*	✓
RS 2400 - 097 - A	97	*3.82*	245	*9.65*	148	*5.83*			4042	*9087*	5029	*11306*	431,0	*26.29*	2,67	*5,89*	✓
RS 2400 - 122 - A	122	*4.80*	295	*11.61*	173	*6.81*			4096	*9207*	5117	*11503*	532,0	*32.45*	3,07	*6,77*	✓

WARNING REMOVE SKUDO

Upside down mounting

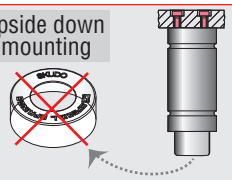

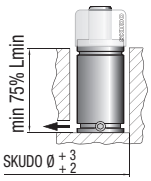

Drop-in

Bottom mount - FB 75
FBA 75 - FBB 75
FBC 75 - FBD 75

FS2 75 - FT 75
FS2A 75 - FTP 75

HOW TO ORDER p. 73

INSTALLATION GUIDELINE p. 203

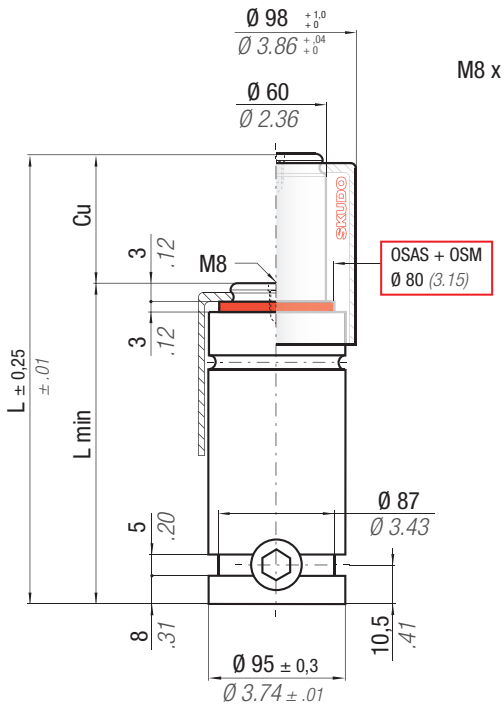

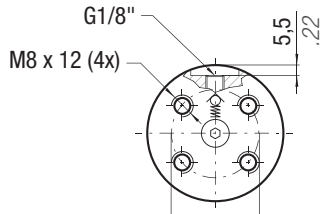

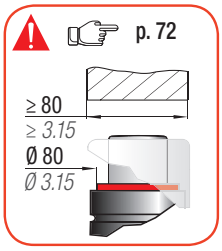

OSAS + OSM = OVER STROKE ACTIVE SAFETY + OVER STROKE MARKER

easy MANIFOLD p. 241

* $F1_i$ = Isothermal end force at 100% Cu p. 18

** $F1_p$ = Polytrophic end force at 100% Cu

NOT FOR

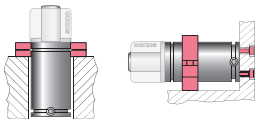

ACTIVE SAFETY

OSAS

USAS

OPAS

SKUDO

RS

N_2	°F 32 - 176	°C 0 - 80	ΔP	P max	P min	S	SPM	Max Speed	Maintenance kit
			± 0,33 %/°C	150 bar / 2175 psi	20 bar / 290 psi	28,27 cm² / 4.382 in²	~ 20 - 100 (at 20°C)	1,8 m/s	39BMRV04200C

CODE	Cu mm	Cu inch	L mm	L inch	L min mm	L min inch	F0 Initial force daN	F0 lb	$F1_i$ * End force daN	$F1_i$ lb	$F1_p$ ** End force daN	$F1_p$ lb	V0 cm³	V0 in³	~Kg	~lb	PED 2014/68/EU
RS 4200 - 013 - A	13	0.51	90	3.54	77	3.03	4240 ± 5%	9532	5633	12664	6471	14547	173,0	10.55	2,76	6.08	✓
RS 4200 - 016 - A	16	0.63	96	3.78	80	3.15			5823	13090	6761	15199	194,0	11.83	2,83	6.24	✓
RS 4200 - 022 - A	22	0.87	108	4.25	86	3.39			6125	13771	7232	16258	234,0	14.27	2,98	6.57	✓
RS 4200 - 029 - A	29	1.14	122	4.80	93	3.66			6390	14365	7650	17198	281,0	17.14	3,16	6.97	✓
RS 4200 - 035 - A	35	1.38	134	5.28	99	3.90			6566	14761	7931	17830	322,0	19.64	3,30	7.28	✓
RS 4200 - 047 - A	47	1.85	158	6.22	111	4.37	150 bar / 2175 psi		6827	15347	8351	18774	403,0	24.58	3,60	7.94	✓
RS 4200 - 060 - A	60	2.36	184	7.24	124	4.88			7024	15790	8673	19498	491,0	29.95	3,93	8.66	✓
RS 4200 - 072 - A	72	2.83	208	8.19	136	5.35	+ 20 °C +68 °F		7158	16091	8893	19992	572,0	34.89	4,20	9.26	✓
RS 4200 - 077 - A	77	3.03	218	8.58	141	5.55			7204	16195	8970	20165	606,0	36.97	4,35	9.59	✓
RS 4200 - 097 - A	97	3.82	258	10.16	161	6.34			7350	16524	9212	20709	741,0	45.20	4,85	10.69	✓
RS 4200 - 122 - A	122	4.80	308	12.13	186	7.32			7476	16807	9423	21184	910,0	55.51	5,47	12.06	✓

WARNING
REMOVE SKUDO

Upside down mounting

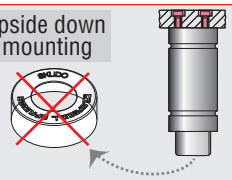

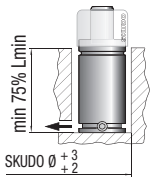

Drop-in

Bottom mount
FB 95 - FBA 95
FBB 95

FS2 95 - FT 95
FS2A 95 - FTP 95

HOW TO ORDER p. 73

INSTALLATION GUIDELINE p. 203

RS 6600

SPECIAL SPRINGS

OSAS + OSM = OVER STROKE ACTIVE SAFETY + OVER STROKE MARKER

ACTIVE SAFETY

OSAS

USAS

OPAS

SKUDO

easy MANIFOLD p. 241

* $F1_i$ = Isothermal end force at 100% Cu p. 18

** $F1_p$ = Polytrophic end force at 100% Cu

NOT FOR

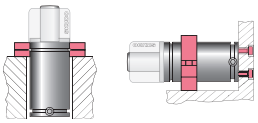

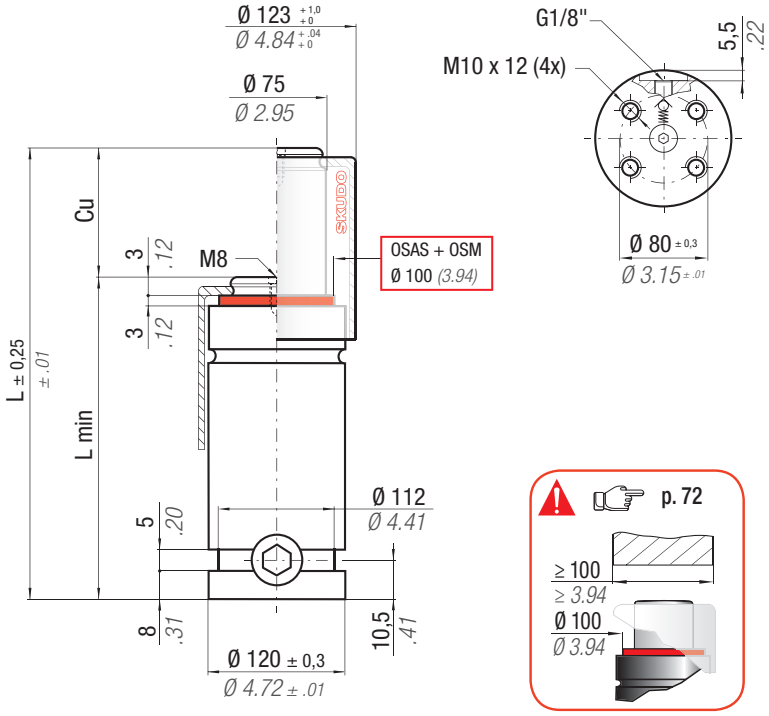

N_2	°F 32 - 176	°C 0 - 80	ΔP	P max	P min	S	SPM	Max Speed	Maintenance kit
			± 0,33 %/°C	150 bar *2175 psi*	20 bar *290 psi*	44,18 cm² *6.848 in²*	~ 20 - 100 (at 20°C)	1,8 m/s	39BMRV06600C

CODE	Cu mm	Cu inch	L mm	L inch	L min mm	L min inch	F0 Initial force daN	F0 lb	$F1_i$ * End force daN	$F1_i$ lb	$F1_p$ ** End force daN	$F1_p$ lb	V0 cm³	V0 in³	~Kg	~lb	PED 2014/68/EU
RS 6600 - 013 - A	13	0.51	100	3.94	87	3.43	6630 ± 5% 150 bar *2175 psi* + 20 °C *+68 °F*	*14904*	8535	*19187*	9705	*21818*	300,0	*18.30*	5,06	*11.16*	✓
RS 6600 - 016 - A	16	0.63	106	4.17	90	3.54			8812	*19811*	10127	*22766*	332,0	*20.25*	5,17	*11.40*	✓
RS 6600 - 022 - A	22	0.87	118	4.65	96	3.78			9265	*20829*	10824	*24333*	396,0	*24.16*	5,42	*11.95*	✓
RS 6600 - 029 - A	29	1.14	132	5.20	103	4.06			9671	*21742*	11458	*25759*	471,0	*28.73*	5,69	*12.54*	✓
RS 6600 - 035 - A	35	1.38	144	5.67	109	4.29			9946	*22360*	11892	*26734*	535,0	*32.64*	5,93	*13.07*	✓
RS 6600 - 047 - A	47	1.85	168	6.61	121	4.76			10362	*23296*	12557	*28229*	663,0	*40.44*	6,40	*14.11*	✓
RS 6600 - 060 - A	60	2.36	194	7.64	134	5.28			10684	*24018*	13077	*29398*	802,0	*48.92*	6,90	*15.21*	✓
RS 6600 - 072 - A	72	2.83	218	8.58	146	5.75			10905	*24515*	13438	*30210*	930,0	*56.73*	7,40	*16.31*	✓
RS 6600 - 077 - A	77	3.03	228	8.98	151	5.94			10982	*24689*	13564	*30493*	983,0	*59.96*	7,60	*16.76*	✓
RS 6600 - 097 - A	97	3.82	268	10.55	171	6.73			11229	*25243*	13970	*31406*	1197,0	*73.02*	8,40	*18.52*	✓
RS 6600 - 122 - A	122	4.80	318	12.52	196	7.72			11443	*25726*	14326	*32206*	1464,0	*89.30*	9,40	*20.72*	✓

WARNING REMOVE SKUDO

Upside down mounting

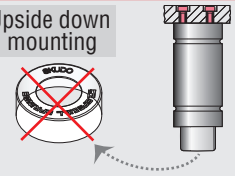

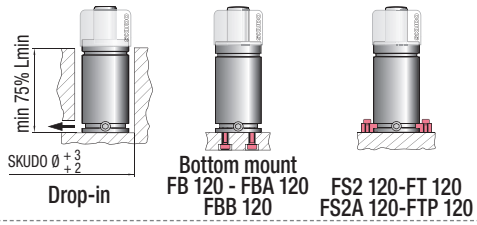

HOW TO ORDER p. 73

INSTALLATION GUIDELINE p. 203

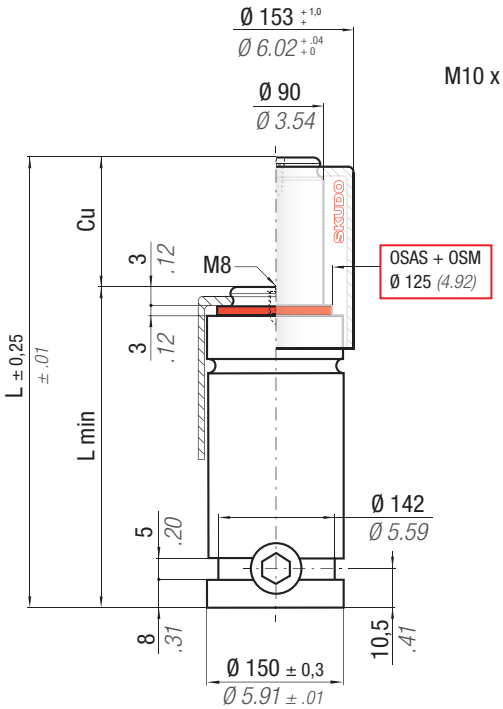

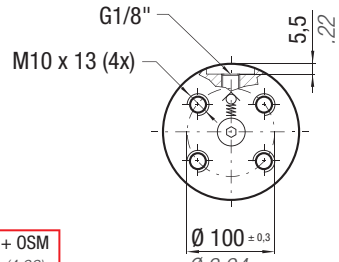

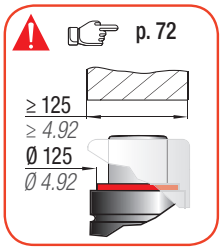

OSAS + OSM = OVER STROKE ACTIVE SAFETY + OVER STROKE MARKER

easy MANIFOLD p. 241

* $F1_i$ = Isothermal end force at 100% Cu p. 18

** $F1_p$ = Polytrophic end force at 100% Cu

NOT FOR

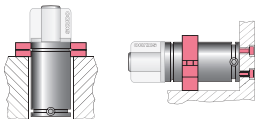

ACTIVE SAFETY

RS

N2	°F 32 - 176	°C 0 - 80	ΔP	P max	P min	S	SPM	Max Speed	Maintenance kit
			± 0,33 %/°C	150 bar / 2175 psi	20 bar / 290 psi	63,62 cm² / 9.864 in²	~ 20 - 100 (at 20°C)	1,8 m/s	39BMRV09500C

CODE	Cu mm	Cu inch	L mm	L inch	L min mm	L min inch	F0 Initial force daN	F0 lb	$F1_i$ * End force daN	$F1_i$ lb	$F1_p$ ** End force daN	$F1_p$ lb	V0 cm³	V0 in³	~Kg	~lb	PED 2014/68/EU
RS 9500 - 016 - A	16	0.63	116	4.57	100	3.94			12388	27849	14124	31752	517,0	31.54	9,51	20.97	✓
RS 9500 - 022 - A	22	0.87	128	5.04	106	4.17			12985	29192	15035	33800	614,0	37.45	9,90	21.83	✓
RS 9500 - 029 - A	29	1.14	142	5.59	113	4.45	9540	21446	13523	30401	15867	35670	727,0	44.35	10,30	22.71	✓
RS 9500 - 035 - A	35	1.38	154	6.06	119	4.69	± 5%		13888	31222	16439	36956	823,0	50.20	10,70	23.59	✓
RS 9500 - 047 - A	47	1.85	178	7.01	131	5.16			14443	32470	17317	38930	1017,0	62.04	11,40	25.13	✓
RS 9500 - 060 - A	60	2.36	204	8.03	144	5.67	150 bar		14873	33436	18004	40475	1226,0	74.79	12,20	26.90	✓
RS 9500 - 072 - A	72	2.83	228	8.98	156	6.14	2175 psi		15170	34104	18483	41551	1420,0	86.62	13,00	28.66	✓
RS 9500 - 077 - A	77	3.03	238	9.37	161	6.34	+ 20 °C	+68 °F	15274	34337	18651	41929	1500,3	91.52	13,30	29.32	✓
RS 9500 - 097 - A	97	3.82	278	10.94	181	7.13			15606	35083	19191	43143	1823,0	111.20	14,60	32.19	✓
RS 9500 - 122 - A	122	4.80	328	12.91	206	8.11			15896	35735	19666	44211	2226,0	135.79	16,10	35.49	✓

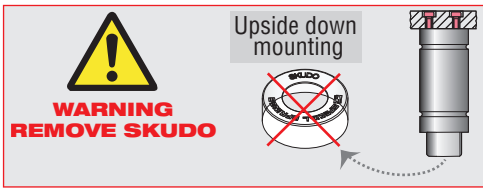

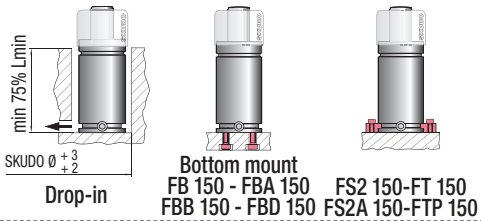

HOW TO ORDER p. 73

INSTALLATION GUIDELINE p. 203

FCA		

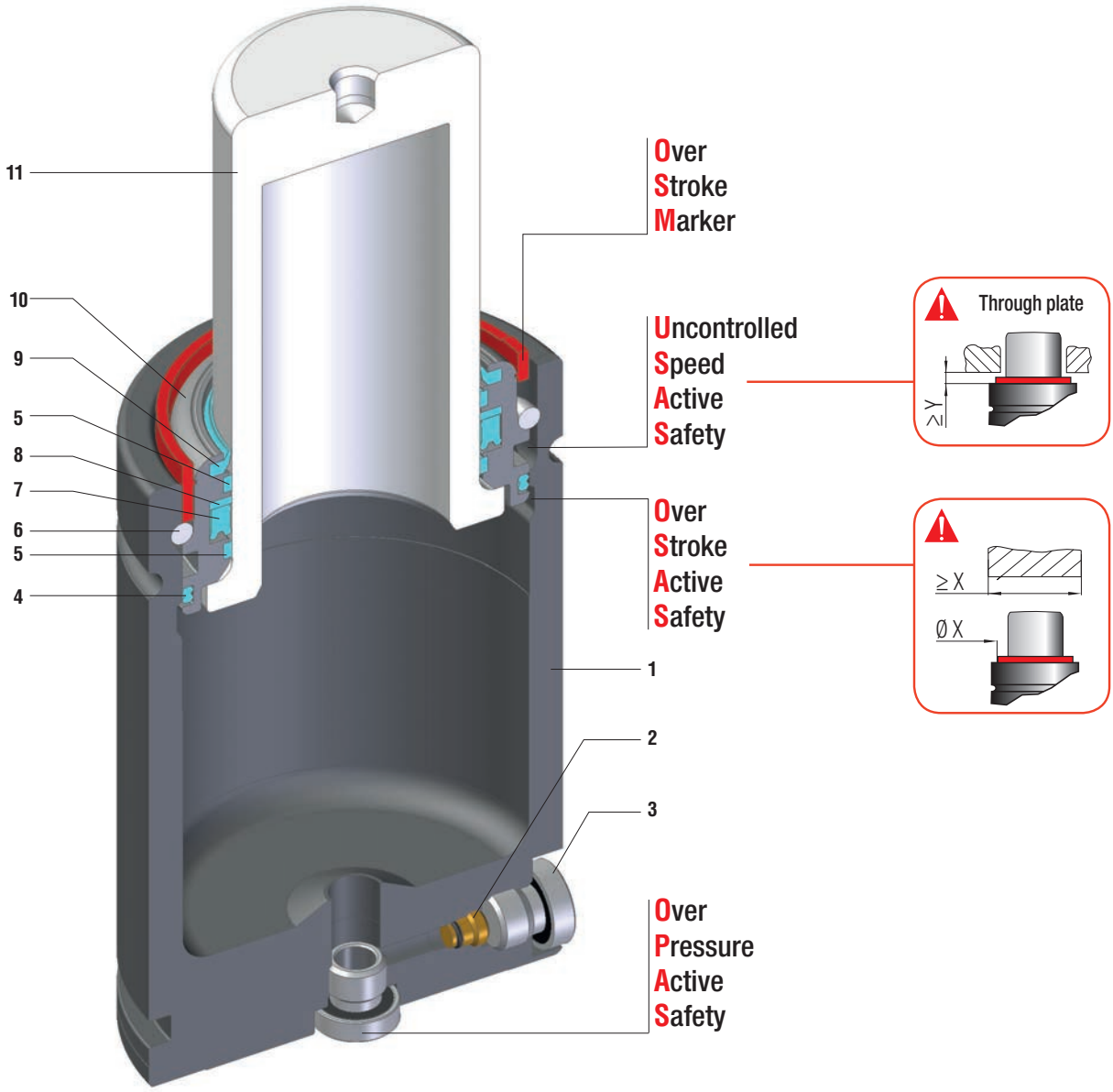

Minima altezza, massima forza, collegabili G1/8 - Minimum height, maximum force, hose cylinders with G1/8 charging port
Minimale Höhe, maximale Kraft, Gdf. mit G1/8 Öffnung verbindbar - Hauteur minimale, force maximale, cylindres raccordés avec trou G1/8 gaz
Mínima altura, máxima fuerza, cilindros conectados con agujero G1/8 gas - Altura mínima, força máxima, cilindros conectados com furo G1/8 gás

SEALING	ROD SEAL
DESIGN	BUSH - BODY DESIGN

1	Body	**5**	Guide ring	**9**	Rod wiper
2	Valve	**6**	Retaining ring	**10**	Bush
3	Plug	**7**	Rod seal	**11**	Rod (nitrited superfinished)
4	Dual ring seal	**8**	Back-up ring		

RANGE CHART

Model	Body Ø		Stroke Cu		Initial force F0		OSAS	USAS	OPAS	SKUDO	SW
	mm	inch	mm	inch	daN	lb					
RF 750	45	1.77	10 - 125	0.39 - 4.92	740	1664	✓	✓	✓	-	✓
RF 1000	50	1.97	13 - 125	0.51 - 4.92	920	2068	✓	✓	✓	-	✓
RF 1200	50	1.97	13 - 125	0.51 - 4.92	1060	2383	✓	✓	✓	-	✓
RF 1500	63	2.48	13 - 125	0.51 - 4.92	1530	3440	✓	✓	✓	-	✓
RF 2400	75	2.95	16 - 125	0.63 - 4.92	2385	5362	✓	✓	✓	-	✓
	95	3.74									
	120	4.72									
	150	5.91									
	150	5.91									
	195	7.68									

✓ Built-in as standard ✓ Optional upon request

☞ RV series

RF

HOW TO ORDER

Series — Revision code

Model

RF 2400-050-A-E-W

Stroke — Version

Available versions

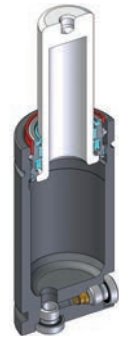

RF 2400-050-A

Standard code

Self contained

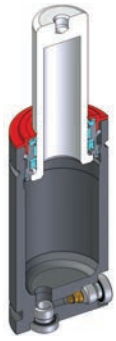

RF 2400-050-A-W

Add "-W" to standard code

Self contained

+

Secondary wiper

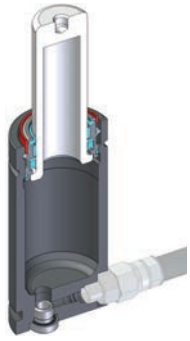

RF 2400-050-A-N

Add "-N" to standard code

Linkable

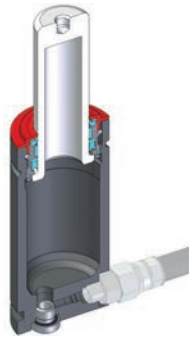

RF 2400-050-A-N-W

Add "-N-W" to standard code

Linkable

+

Secondary wiper

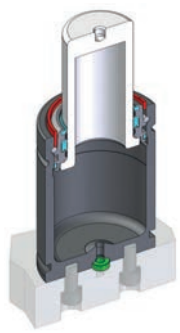

RF 2400-050-A-E

Add "-E" to standard code

Easy Manifold

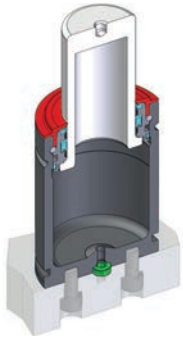

RF 2400-050-A-E-W

Add "-E-W" to standard code

Easy Manifold

+

Secondary wiper

RF 750
linkable G1/8”

075.90.60 (FCA)			

SPECIAL SPRINGS

SW

OSAS + OSM = OVER STROKE ACTIVE SAFETY + OVER STROKE MARKER

ACTIVE SAFETY

OSAS

USAS

OPAS

* $F1_i$ = Isothermal end force at 100% Cu p. 18

** $F1_p$ = Polytrophic end force at 100% Cu

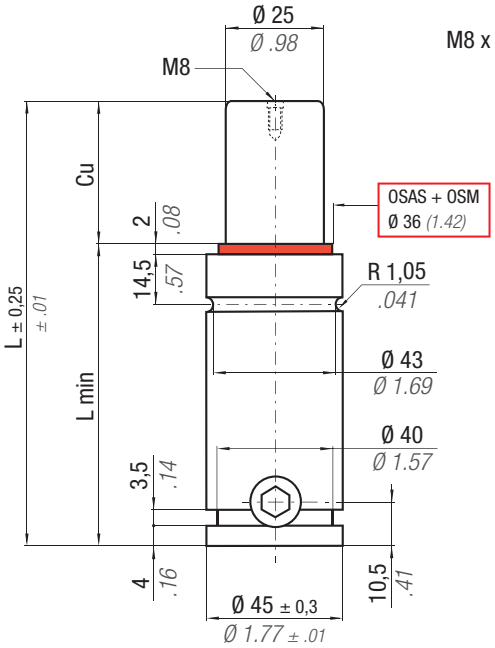

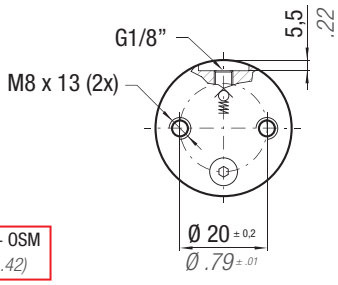

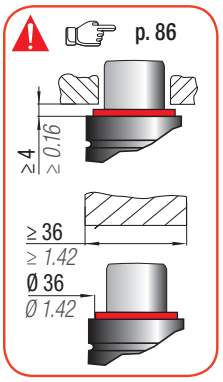

N2	°F 32 - 176	°C 0 - 80	ΔP	P max	P min	S	SPM	Max Speed	Maintenance kit
			± 0,33 %/°C	150 bar *2175 psi*	20 bar *290 psi*	4,91 cm² *0.761 in²*	~ 20 - 100 (at 20°C)	1,8 m/s	39BMRV00750C

CODE	Cu mm	Cu inch	L mm	L inch	L min mm	L min inch	F0 Initial force daN	F0 lb	$F1_i$ * End force daN	$F1_i$ lb	$F1_p$ ** End force daN	$F1_p$ lb	V0 cm³	V0 in³	~Kg	~lb	PED 2014/68/EU
RF 750 - 010 - A	10	0.39	62	2.44	52	2.05	740 ± 5%	1664	1091	2452	1298	2918	18,0	1.10	0,47	1.04	✓
RF 750 - 013 - A	13	0.51	68	2.68	55	2.17			1125	2530	1354	3044	21,0	1.28	0,48	1.06	✓
RF 750 - 016 - A	16	0.63	74	2.91	58	2.28			1151	2587	1395	3136	25,0	1.53	0,50	1.10	✓
RF 750 - 019 - A	19	0.75	80	3.15	61	2.40			1170	2631	1426	3206	29,0	1.77	0,52	1.15	✓
RF 750 - 025 - A	25	0.98	92	3.62	67	2.64			1198	2694	1471	3307	37,0	2.26	0,56	1.23	✓
RF 750 - 032 - A	32	1.26	106	4.17	74	2.91			1220	2742	1506	3386	46,0	2.81	0,61	1.34	✓
RF 750 - 038 - A	38	1.50	118	4.65	80	3.15	150 bar *2175psi*		1232	2771	1527	3433	53,0	3.23	0,65	1.43	✓
RF 750 - 050 - A	50	1.97	142	5.59	92	3.62			1250	2810	1556	3498	68,0	4.15	0,72	1.59	✓
RF 750 - 063 - A	63	2.48	168	6.61	105	4.13			1262	2838	1577	3545	85,0	5.19	0,81	1.79	✓
RF 750 - 075 - A	75	2.95	192	7.56	117	4.61	+ 20 °C *+68 °F*		1270	2855	1590	3574	100,0	6.10	0,88	1.94	✓
RF 750 - 080 - A	80	3.15	202	7.95	122	4.80			1273	2861	1594	3583	107,0	6.53	0,92	2.03	✓
RF 750 - 100 - A	100	3.94	242	9.53	142	5.59			1281	2879	1607	3613	132,0	8.05	1,04	2.29	✓
RF 750 - 125 - A	125	4.92	292	11.50	167	6.57			1287	2894	1618	3637	164,0	10.00	1,21	2.67	✓

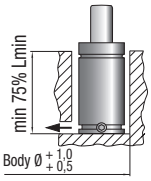

Drop-in

Bottom mount
FB 45 - FBA 45
FBB 45 - FBD 45

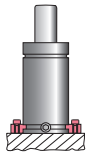

FS2 45 - FT 45
FS2A 45 - FTP 45

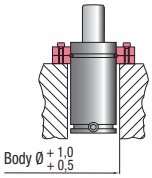

FC 45 A
FCQC 45

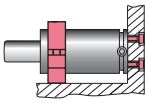

FSA 45
FSD 45 - FSE 45

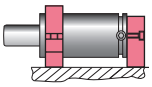

FSA 45 + R 50 A
FSE 45 + R 50 A

HOW TO ORDER p. 87

INSTALLATION GUIDELINE p. 203

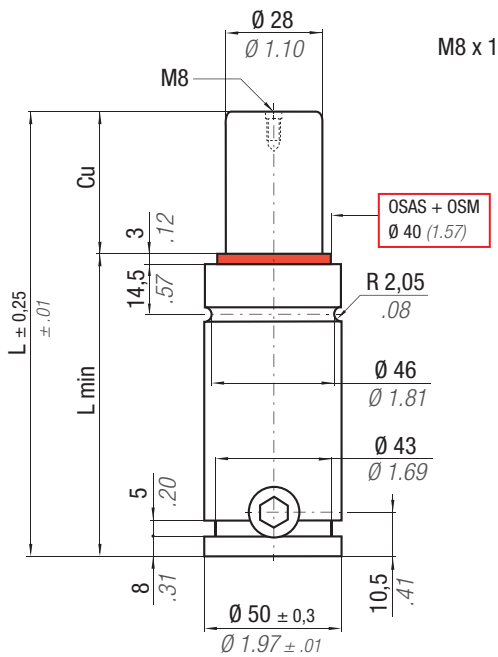

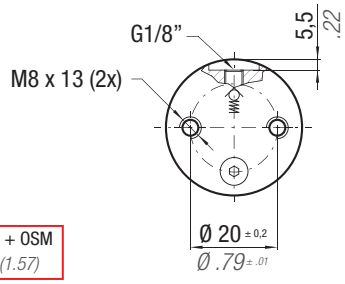

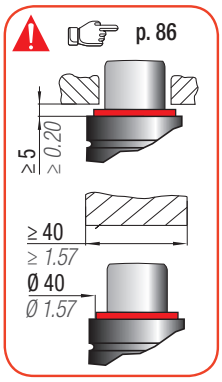

OSAS + OSM = OVER STROKE ACTIVE SAFETY + OVER STROKE MARKER

SW

* $F1_i$ = Isothermal end force at 100% Cu p. 18

** $F1_p$ = Polytrophic end force at 100% Cu

ACTIVE SAFETY

OSAS

USAS

OPAS

RF

N2	°F 32 - 176	°C 0 - 80	ΔP	P max	P min	S	SPM	Max Speed	Maintenance kit
			± 0,33 %/°C	150 bar *2175 psi*	20 bar *290 psi*	6,15 cm² *0.953 in²*	~ 20 - 100 (at 20°C)	1,8 m/s	39BMRV01000C

CODE	Cu mm	Cu inch	L mm	L inch	L min mm	L min inch	F0 Initial force daN	F0 lb	$F1_i$ * End force daN	$F1_i$ lb	$F1_p$ ** End force daN	$F1_p$ lb	V0 cm³	V0 in³	~Kg	~lb	PED 2014/68/EU
RF 1000 - 013 - A	13	0.51	74	2.91	61	2.40	920 ± 5%	2068	1349	3033	1599	3595	29,0	1.77	0,65	1.43	✓
RF 1000 - 016 - A	16	0.63	80	3.15	64	2.52			1386	3117	1658	3727	34,0	2.07	0,68	1.50	✓
RF 1000 - 019 - A	19	0.75	86	3.39	67	2.64			1416	3183	1705	3833	39,0	2.38	0,70	1.54	✓
RF 1000 - 025 - A	25	0.98	98	3.86	73	2.87			1460	3282	1775	3990	48,0	2.93	0,75	1.65	✓
RF 1000 - 032 - A	32	1.26	112	4.41	80	3.15			1495	3361	1832	4118	59,0	3.60	0,81	1.79	✓
RF 1000 - 038 - A	38	1.50	124	4.88	86	3.39			1517	3410	1868	4199	69,0	4.21	0,85	1.87	✓
RF 1000 - 050 - A	50	1.97	148	5.83	98	3.86	150 bar *2175 psi*		1548	3479	1919	4314	88,0	5.37	0,95	2.09	✓
RF 1000 - 063 - A	63	2.48	174	6.85	111	4.37			1570	3528	1955	4395	108,0	6.59	1,05	2.31	✓
RF 1000 - 075 - A	75	2.95	198	7.80	123	4.84	+ 20 °C *+68 °F*		1584	3560	1978	4447	127,0	7.75	1,15	2.54	✓
RF 1000 - 080 - A	80	3.15	208	8.19	128	5.04			1589	3571	1986	4465	135,0	8.24	1,19	2.62	✓
RF 1000 - 100 - A	100	3.94	248	9.76	148	5.83			1603	3604	2011	4521	166,0	10.13	1,35	2.98	✓
RF 1000 - 125 - A	125	4.92	298	11.73	173	6.81			1616	3632	2031	4566	205,0	12.51	1,55	3.42	✓

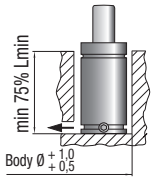

Drop-in

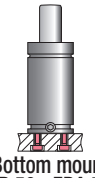

Bottom mount
FB 50 - FBA 50
FBB 50 - FBD 50

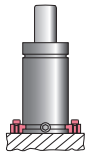

FS2 50 - FT 50
FS2A 50 - FTP 50

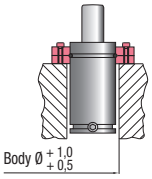

FC 50 A
FCQC 50

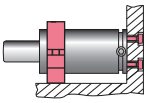

FSA 50
FSD 50 - FSE 50

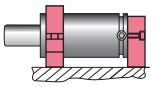

FSD 50 + R 50 A
FSE 50 + R 50 A

HOW TO ORDER

p. 87

INSTALLATION GUIDELINE

p. 203

RF 1200
linkable G1/8”

SPECIAL SPRINGS

SW

OSAS + OSM = OVER STROKE ACTIVE SAFETY + OVER STROKE MARKER

ACTIVE SAFETY

OSAS

USAS

OPAS

* $F1_i$ = Isothermal end force at 100% Cu p. 18

** $F1_p$ = Polytrophic end force at 100% Cu

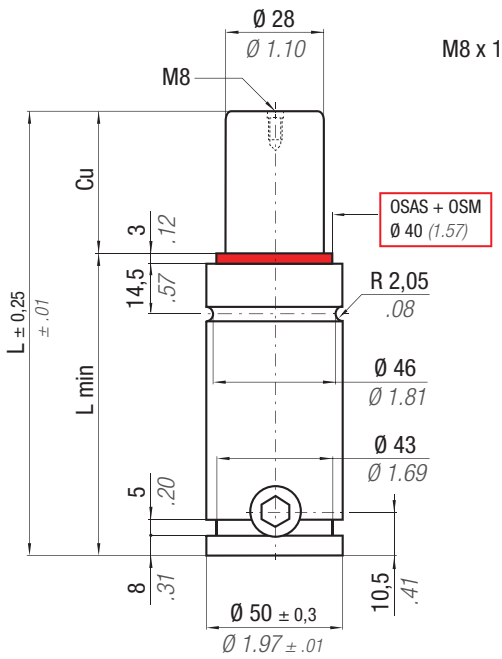

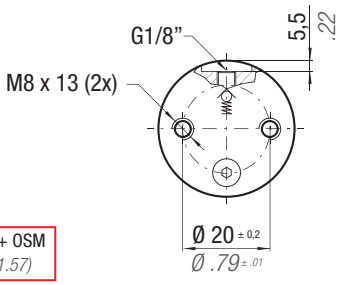

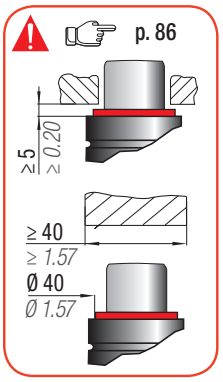

N2	°F 32 - 176	°C 0 - 80	ΔP ± 0,33 %/°C	P max 170 bar 2465 psi	P min 20 bar 290 psi	S 6,15 cm² 0.953 in²	SPM ~ 20 - 100 (at 20°C)	Max Speed 1,8 m/s	Maintenance kit 39BMRV01000C

CODE	Cu mm	Cu inch	L mm	L inch	L min mm	L min inch	F0 Initial force daN	F0 lb	$F1_i$ * End force daN	$F1_i$ lb	$F1_p$ ** End force daN	$F1_p$ lb	V0 cm³	V0 in³	~Kg	~lb	PED 2014/68/EU
RF 1200 - 013 - A	13	0.51	74	2.91	61	2.40	1060 ± 5% 170 bar 2465 psi + 20 °C +68 °F	2383	1553	3490	1802	4052	29,0	1.77	0,65	1.43	✓
RF 1200 - 016 - A	16	0.63	80	3.15	64	2.52			1597	3591	1869	4202	34,0	2.07	0,68	1.50	✓
RF 1200 - 019 - A	19	0.75	86	3.39	67	2.64			1633	3671	1922	4321	39,0	2.38	0,70	1.54	✓
RF 1200 - 025 - A	25	0.98	98	3.86	73	2.87			1685	3789	2001	4500	48,0	2.93	0,75	1.65	✓
RF 1200 - 032 - A	32	1.26	112	4.41	80	3.15			1728	3884	2066	4644	59,0	3.60	0,81	1.79	✓
RF 1200 - 038 - A	38	1.50	124	4.88	86	3.39			1754	3943	2106	4735	69,0	4.21	0,85	1.87	✓
RF 1200 - 050 - A	50	1.97	148	5.83	98	3.86			1791	4026	2163	4863	88,0	5.37	0,95	2.09	✓
RF 1200 - 063 - A	63	2.48	174	6.85	111	4.37			1817	4085	2204	4954	108,0	6.59	1,05	2.31	✓
RF 1200 - 075 - A	75	2.95	198	7.80	123	4.84			1834	4124	2230	5013	127,0	7.75	1,15	2.54	✓
RF 1200 - 080 - A	80	3.15	208	8.19	128	5.04			1840	4137	2239	5033	135,0	8.24	1,19	2.62	✓
RF 1200 - 100 - A	100	3.94	248	9.76	148	5.83			1858	4177	2267	5096	166,0	10.13	1,35	2.98	✓
RF 1200 - 125 - A	125	4.92	298	11.73	173	6.81			1873	4210	2290	5148	205,0	12.51	1,55	3.42	✓

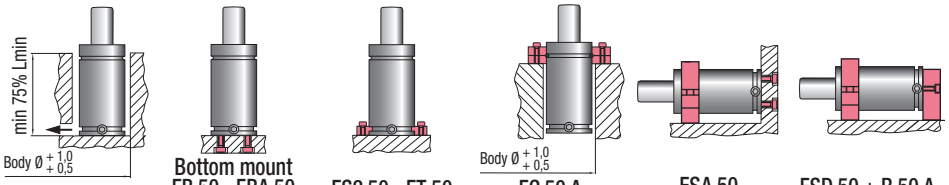

Drop-in

Bottom mount
FB 50 - FBA 50
FBB 50 - FBD 50

FS2 50 - FT 50
FS2A 50 - FTP 50

FC 50 A
FCQC 50

FSA 50
FSD 50 - FSE 50

FSD 50 + R 50 A
FSE 50 + R 50 A

HOW TO ORDER p. 87

INSTALLATION GUIDELINE p. 203

RF 1500
linkable G1/8”

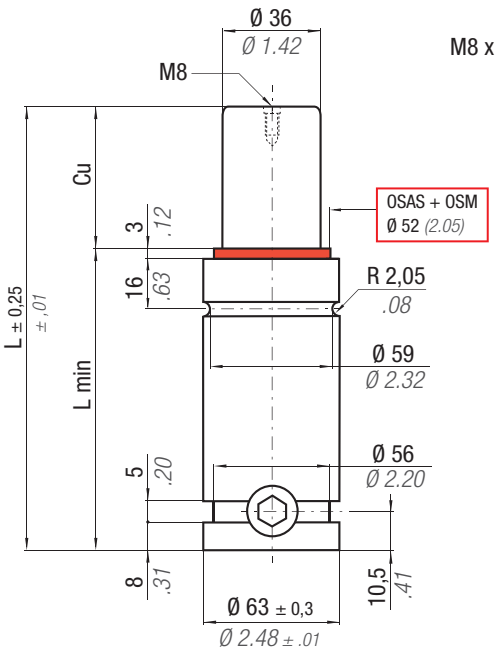

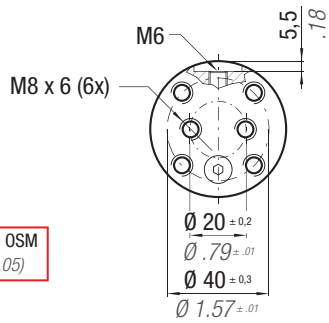

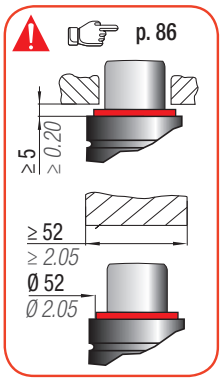

OSAS + OSM = OVER STROKE ACTIVE SAFETY + OVER STROKE MARKER

Il nuovo codice sarà fornito solo ad esaurimento del vecchio

The new code will be supplied only when the old will be out of stock

Der neue Kode wird geliefert nur wenn der alte nicht mehr im Lager ist

Le nouveau code sera fourni uniquement lorsque le vieux stock sera ecoulé

El nuevo código será suministrado sólo cuando el viejo está fuera de stock

O novo código irá ser fornecido apenas quando o antigo esgotar stock

*** $F1_i$ =** Isothermal end force at 100% Cu p. 18

**** $F1_p$ =** Polytrophic end force at 100% Cu

ACTIVE SAFETY

OSAS

USAS

OPAS

RF

N2	°F 32 - 176 / °C 0 - 80	ΔP	P max	P min	S	SPM	Max Speed	Maintenance kit
		± 0,33 %/°C	150 bar *2175 psi*	20 bar *290 psi*	10,18 cm² *1.578 in²*	~ 20 - 100 (at 20°C)	1,8 m/s	39BMRV01500C

CODE PHASING OUT from 11/2019	NEW	Cu mm	Cu inch	L mm	L inch	L min mm	L min inch	F0 Initial force daN	F0 lb	$F1_i$ End force * daN	$F1_i$ lb	$F1_p$ End force ** daN	$F1_p$ lb	V0 cm³	V0 in³	~Kg	~lb	PED 2014/68/EU
RF 1500 - 013 - A	RF 1500 - 013 - B	13	0.51	80	3.15	67	2.64			2152	4838	2521	5667	53,0	3.23	1,15	2.54	✓
RF 1500 - 016 - A	RF 1500 - 016 - B	16	0.63	86	3.39	70	2.76			2213	4975	2616	5881	61,0	3.72	1,18	2.60	✓
RF 1500 - 019 - A	RF 1500 - 019 - B	19	0.75	92	3.62	73	2.87			2262	5085	2693	6054	69,0	4.21	1,22	2.69	✓
RF 1500 - 025 - A	RF 1500 - 025 - B	25	0.98	104	4.09	79	3.11	1530	3440	2336	5252	2811	6319	85,0	5.19	1,29	2.84	✓
RF 1500 - 032 - A	RF 1500 - 032 - B	32	1.26	118	4.65	86	3.39	± 5%		2397	5389	2908	6537	103,0	6.28	1,37	3.02	✓
RF 1500 - 038 - A	RF 1500 - 038 - B	38	1.50	130	5.12	92	3.62			2435	5475	2971	6679	119,0	7.26	1,44	3.17	✓
RF 1500 - 050 - A	RF 1500 - 050 - B	50	1.97	154	6.06	104	4.09	150 bar *2175 psi*		2490	5597	3059	6877	151,0	9.21	1,58	3.48	✓
RF 1500 - 063 - A	RF 1500 - 063 - B	63	2.48	180	7.09	117	4.61			2529	5685	3123	7021	186,0	11.35	1,74	3.84	✓
RF 1500 - 075 - A	RF 1500 - 075 - B	75	2.95	204	8.03	129	5.08	+ 20 °C *+68 °F*		2555	5743	3165	7115	217,0	13.24	1,88	4.14	✓
RF 1500 - 080 - A	RF 1500 - 080 - B	80	3.15	214	8.43	134	5.28			2563	5763	3180	7149	231,0	14.09	1,94	4.28	✓
RF 1500 - 100 - A	RF 1500 - 100 - B	100	3.94	254	10.00	154	6.06			2590	5824	3224	7248	284,0	17.32	2,18	4.81	✓
RF 1500 - 125 - A	RF 1500 - 125 - B	125	4.92	304	11.97	179	7.05			2613	5875	3262	7333	350,0	21.35	2,47	5.45	✓

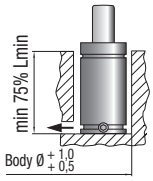

Drop-in

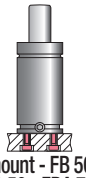

Bottom mount - FB 50 - FB 63
FB 75 - FBA 50 - FBA 75 - FBB 50
FBB 63 - FBB 75 - FBD 50 - FBD 75

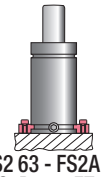

FS2 63 - FS2A 63
FS2B 63 - FT 63
FTP 63

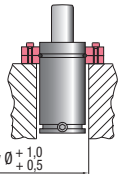

FC 63 A- FCQ 63 A
FCQC 63

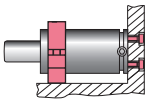

FSC 63
FSD 63

HOW TO ORDER

p. 87

INSTALLATION GUIDELINE

p. 203

RF 2400
linkable G1/8”

075.90.60 (FCA)			

SPECIAL SPRINGS

SW

OSAS + OSM = OVER STROKE ACTIVE SAFETY + OVER STROKE MARKER

ACTIVE SAFETY

easy MANIFOLD p. 241

OSAS

USAS

OPAS

* $F1_i$ = Isothermal end force at 100% Cu p. 18

** $F1_p$ = Polytrophic end force at 100% Cu

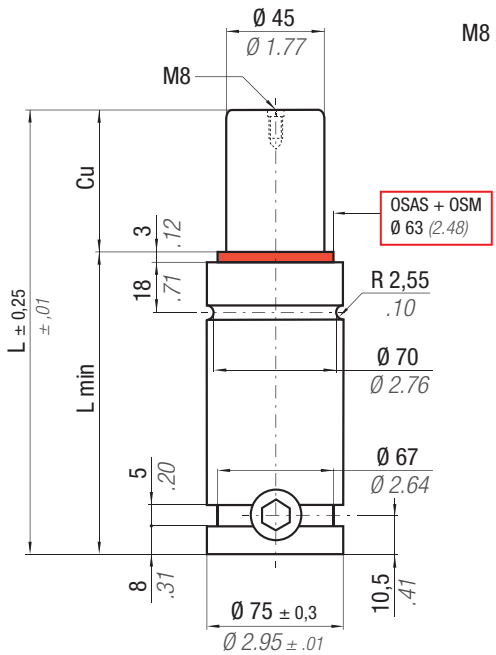

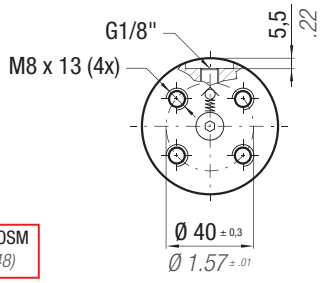

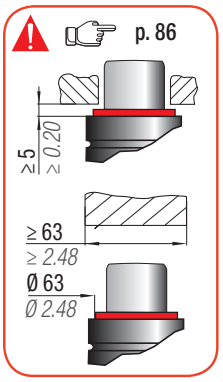

N2	°F 32 - 176 / °C 0 - 80	ΔP	P max	P min	S	SPM	Max Speed	Maintenance kit
		± 0,33 %/°C	150 bar *2175 psi*	20 bar *290 psi*	15,90 cm² *2.465 in²*	~ 20 - 100 (at 20°C)	1,8 m/s	39BMRV02400D

CODE	Cu mm	Cu inch	L mm	L inch	L min mm	L min inch	Fo Initial force daN	Fo lb	$F1_i$ End force * daN	$F1_i$ lb	$F1_p$ End force ** daN	$F1_p$ lb	Vo cm³	Vo in³	~Kg	~lb	PED 2014/68/EU
RF 2400 - 016 - A	16	0.63	87	3.43	71	2.80	2385 ± 5%	5362	3493	7852	4142	9312	93,0	5.67	1,68	3.70	✓
RF 2400 - 019 - A	19	0.75	93	3.66	74	2.91			3574	8035	4271	9602	105,0	6.41	1,73	3.81	✓
RF 2400 - 025 - A	25	0.98	105	4.13	80	3.15			3698	8313	4468	10044	129,0	7.87	1,82	4.01	✓
RF 2400 - 032 - A	32	1.26	119	4.69	87	3.43			3800	8542	4632	10413	157,0	9.58	1,93	4.25	✓
RF 2400 - 038 - A	38	1.50	131	5.16	93	3.66			3864	8687	4737	10649	181,0	11.04	2,03	4.48	✓
RF 2400 - 050 - A	50	1.97	155	6.10	105	4.13	150 bar *2175 psi*		3956	8893	4887	10986	230,0	14.03	2,21	4.87	✓
RF 2400 - 063 - A	63	2.48	181	7.13	118	4.65			4022	9042	4996	11231	282,0	17.20	2,42	5.34	✓
RF 2400 - 075 - A	75	2.95	205	8.07	130	5.12			4066	9140	5068	11393	330,0	20.13	2,61	5.75	✓
RF 2400 - 080 - A	80	3.15	215	8.46	135	5.31	+ 20 °C *+68 °F*		4081	9174	5093	11450	350,0	21.35	2,69	5.93	✓
RF 2400 - 100 - A	100	3.94	255	10.04	155	6.10			4127	9278	5169	11620	431,0	26.29	3,00	6.61	✓
RF 2400 - 125 - A	125	4.92	305	12.01	180	7.09			4166	9365	5234	11767	532,0	32.45	3,40	7.50	✓

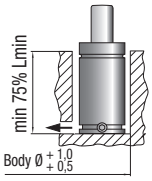

Drop-in

Bottom mount - FB 75
FBA 75 - FBB 75
FBC 75 - FBD 75

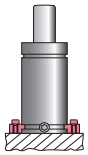

FS2 75 - FT 75
FS2A 75 - FTP 75

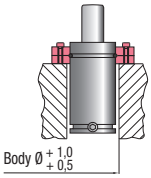

FC 75 A
FCQC 75

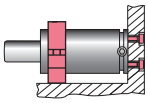

FSA 75
FSD 75 - FSE 75

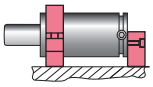

FSD 75 + R 75 A
FSE 75 + R 75 A

HOW TO ORDER p. 87

INSTALLATION GUIDELINE p. 203

RF

THIS PAGE IS INTENTIONALLY LEFT BLANK

Nissan	Renault	

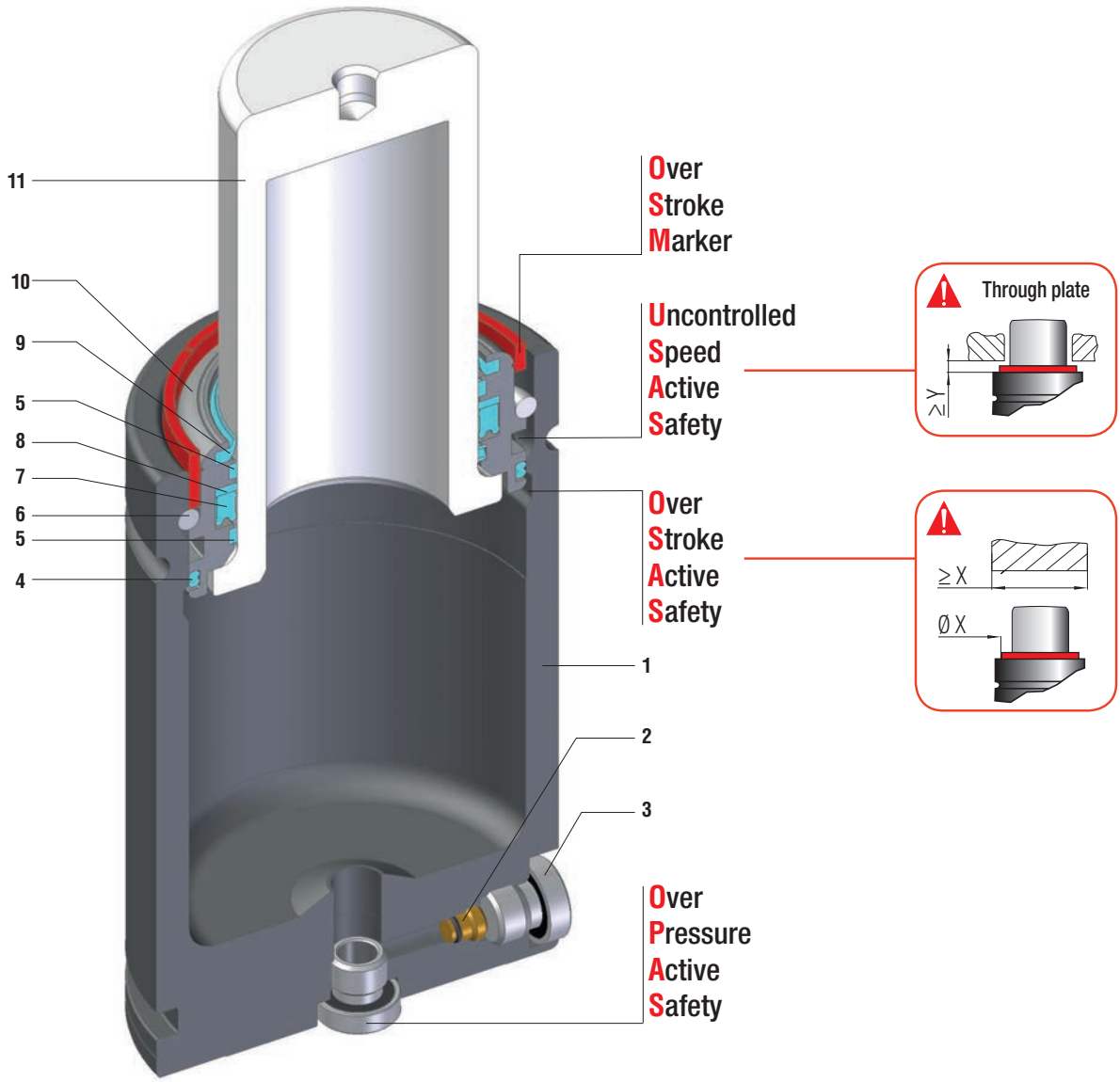

Minima altezza, massima forza, collegabili G1/8 - Minimum height, maximum force, hose cylinders with G1/8 charging port - Minimale Höhe, maximale Kraft, Gdf. mit G1/8 Öffnung verbindbar - Hauteur minimale, force maximale, cylindres raccordés avec trou G1/8 gaz - Mínima altura, máxima fuerza, cilindros conectados con agujero G1/8 gas - Altura mínima, força máxima, cilindros conectados com furo G1/8 gás

SEALING	ROD SEAL
DESIGN	BUSH - BODY DESIGN

1	Body	**5**	Guide ring	**9**	Rod wiper
2	Valve	**6**	Retaining ring	**10**	Bush
3	Plug	**7**	Rod seal	**11**	Rod (nitrited superfinished)
4	Dual ring seal	**8**	Back-up ring		

RANGE CHART

Model	Body Ø		Stroke Cu		Initial force F0		OSAS	USAS	OPAS	SKUDO	SW
	mm	*inch*	mm	*inch*	daN	*lb*					
RG 750	45	*1.77*	10 - 125	*0.39 - 4.92*	740	*1664*	✓	✓	✓	-	✓
RG 1000	50	*1.97*	10 - 125	*0.39 - 4.92*	920	*2068*	✓	✓	✓	-	✓
RG 1500	63	*2.48*	10 - 125	*0.39 - 4.92*	1530	*3440*	✓	✓	✓	-	✓
RG 2400	75	*2.95*	10 - 125	*0.39 - 4.92*	2385	*5362*	✓	✓	✓	-	✓
RG 4200	95	*3.74*	16 - 125	*0.63 - 4.92*	4240	*9532*	✓	✓	✓	-	✓
RG 6600	120	*4.72*	16 - 125	*0.63 - 4.92*	6630	*14905*	✓	✓	✓	-	✓

✓ Built-in as standard ✓ Optional upon request

HOW TO ORDER

Series — Revision code

Model

RG 2400-050-A-E-W

Stroke — Version

Available versions

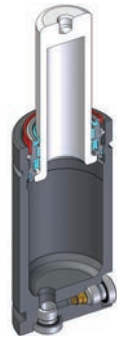

RG 2400-050-A

Standard code

Self contained

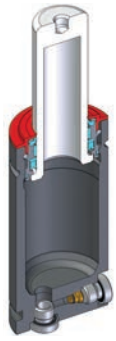

RG 2400-050-A-W

Add "-W" to standard code

Self contained

+

Secondary wiper

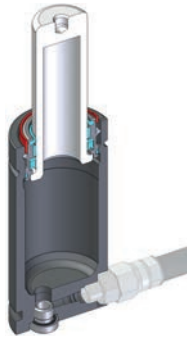

RG 2400-050-A-N

Add "-N" to standard code

Linkable

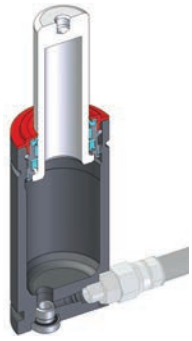

RG 2400-050-A-N-W

Add "-N-W" to standard code

Linkable

+

Secondary wiper

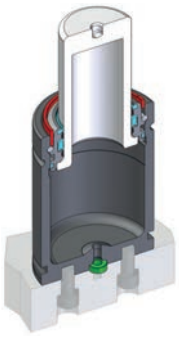

RG 2400-050-A-E

Add "-E" to standard code

Easy Manifold

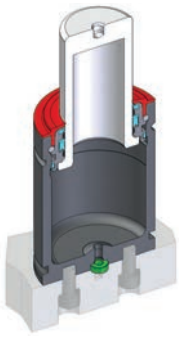

RG 2400-050-A-E-W

Add "-E-W" to standard code

Easy Manifold

+

Secondary wiper

RG 750

SPECIAL SPRINGS

SW

OSAS + OSM = OVER STROKE ACTIVE SAFETY + OVER STROKE MARKER

ACTIVE SAFETY

OSAS

USAS

OPAS

* $F1_i$ = Isothermal end force at 100% Cu p. 18

** $F1_p$ = Polytrophic end force at 100% Cu

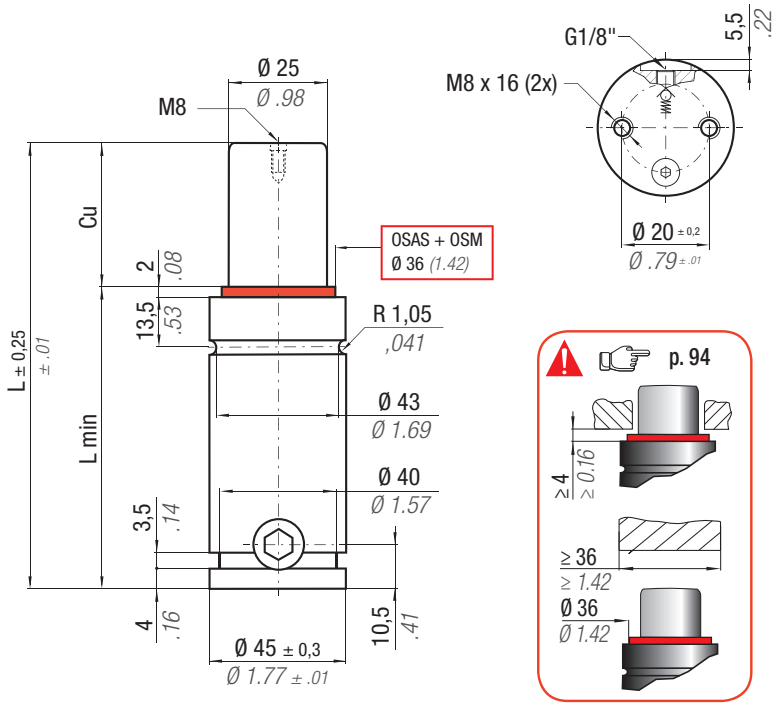

N2	°F 32 - 176	°C 0 - 80	ΔP	P max	P min	S	SPM	Max Speed	Maintenance kit
			± 0,33 %/°C	150 bar *2175 psi*	20 bar *290 psi*	4,91 cm² *0.761 in²*	~ 20 - 100 (at 20°C)	1,8 m/s	39BMRV00750C

CODE	Cu mm	Cu inch	L mm	L inch	L min mm	L min inch	Fo Initial force daN	Fo lb	$F1_i$ * End force daN	$F1_i$ lb	$F1_p$ ** End force daN	$F1_p$ lb	Vo cm³	Vo in³	~Kg	~lb	PED 2014/68/EU
RG 750 - 010 - A	10	0.39	67	2.64	57	2.24	740 ± 5%	1664	1018	2288	1184	2662	21,0	1.28	0,50	1.10	✓
RG 750 - 013 - A	13	0.51	73	2.87	60	2.36			1056	2373	1243	2795	24,0	1.46	0,52	1.15	✓
RG 750 - 016 - A	16	0.63	79	3.11	63	2.48			1085	2439	1289	2899	28,0	1.71	0,54	1.19	✓
RG 750 - 019 - A	19	0.75	85	3.35	66	2.60			1108	2492	1326	2982	32,0	1.95	0,56	1.23	✓
RG 750 - 025 - A	25	0.98	97	3.82	72	2.83			1143	2570	1382	3107	40,0	2.44	0,60	1.32	✓
RG 750 - 032 - A	32	1.26	111	4.37	79	3.11			1172	2634	1428	3210	49,0	2.99	0,64	1.41	✓
RG 750 - 038 - A	38	1.50	123	4.84	85	3.35	150 bar *2175psi*		1189	2674	1457	3275	56,0	3.42	0,68	1.50	✓
RG 750 - 050 - A	50	1.97	147	5.79	97	3.82			1214	2730	1497	3366	72,0	4.39	0,76	1.68	✓
RG 750 - 063 - A	63	2.48	173	6.81	110	4.33	+ 20 °C *+68 °F*		1232	2770	1527	3432	88,0	5.37	0,84	1.85	✓
RG 750 - 075 - A	75	2.95	197	7.76	122	4.80			1244	2796	1546	3475	103,0	6.28	0,92	2.03	✓
RG 750 - 080 - A	80	3.15	207	8.15	127	5.00			1248	2805	1552	3490	110,0	6.71	0,95	2.09	✓
RG 750 - 100 - A	100	3.94	247	9.72	147	5.79			1260	2832	1573	3535	135,0	8.24	1,08	2.38	✓
RG 750 - 125 - A	125	4.92	297	11.69	172	6.77			1270	2855	1589	3573	167,0	10.19	1,24	2.73	✓

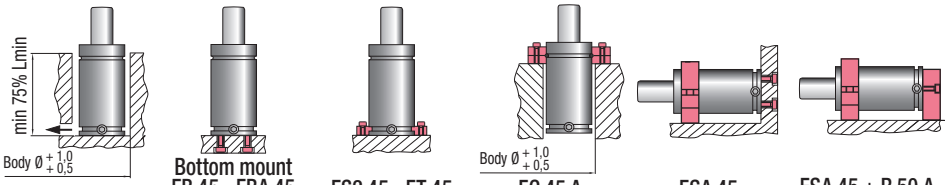

Drop-in

Bottom mount
FB 45 - FBA 45
FBB 45 - FBD 45

FS2 45 - FT 45
FS2A 45 - FTP 45

Body Ø + 1,0 + 0,5
FC 45 A
FCQC 45

FSA 45
FSD 45 - FSE 45

FSA 45 + R 50 A
FSE 45 + R 50 A

HOW TO ORDER
p. 95

INSTALLATION GUIDELINE
p. 203

K32D2-2400-50 (Nissan)	EM24.54.700 (Renault)		

RG 1000

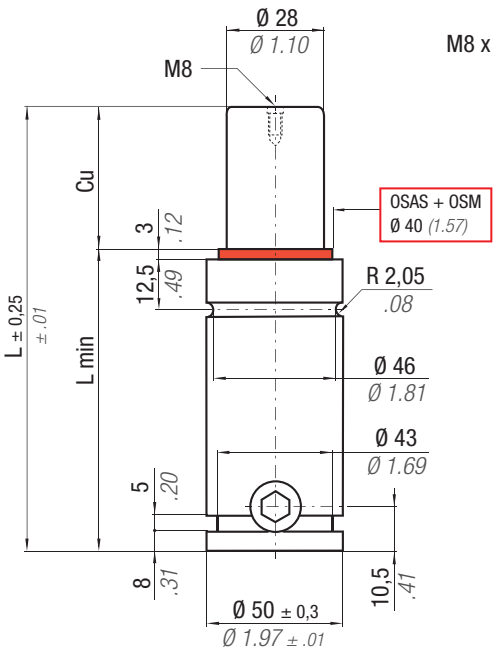

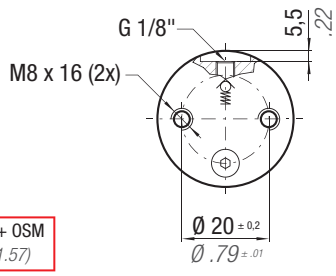

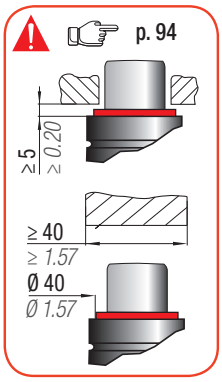

OSAS + OSM = OVER STROKE ACTIVE SAFETY + OVER STROKE MARKER

SW

* $F1_i$ = Isothermal end force at 100% Cu p. 18

** $F1_p$ = Polytrophic end force at 100% Cu

ACTIVE SAFETY

OSAS

USAS

OPAS

RG

N2	°F 32 - 176	°C 0 - 80	ΔP	P max	P min	S	SPM	Max Speed	Maintenance kit
			± 0,33 %/°C	150 bar / 2175 psi	20 bar / 290 psi	6,15 cm² / 0.953 in²	~ 20 - 100 (at 20°C)	1,8 m/s	39BMRV01000C

CODE	Cu mm	Cu inch	L mm	L inch	L min mm	L min inch	F0 Initial force daN	F0 lb	$F1_i$ * End force daN	$F1_i$ lb	$F1_p$ ** End force daN	$F1_p$ lb	V0 cm³	V0 in³	~Kg	~lb	PED 2014/68/EU
RG 1000 - 010 - A	10	0.39	72	2.83	62	2.44	920 ± 5%	2068	1274	2863	1481	3329	26,0	1.59	0,67	1.48	✓
RG 1000 - 013 - A	13	0.51	78	3.07	65	2.56			1323	2973	1557	3500	31,0	1.89	0,70	1.54	✓
RG 1000 - 016 - A	16	0.63	84	3.31	68	2.68			1361	3059	1617	3635	35,0	2.14	0,72	1.59	✓
RG 1000 - 019 - A	19	0.75	90	3.54	71	2.80			1391	3128	1666	3745	40,0	2.44	0,75	1.65	✓
RG 1000 - 025 - A	25	0.98	102	4.02	77	3.03			1437	3232	1739	3909	50,0	3.05	0,79	1.74	✓
RG 1000 - 032 - A	32	1.26	116	4.57	84	3.31			1475	3316	1800	4047	61,0	3.72	0,85	1.87	✓
RG 1000 - 038 - A	38	1.50	128	5.04	90	3.54	150 bar	2175 psi	1499	3369	1838	4132	70,0	4.27	0,90	1.98	✓
RG 1000 - 050 - A	50	1.97	152	5.98	102	4.02			1532	3445	1893	4256	89,0	5.43	0,99	2.18	✓
RG 1000 - 063 - A	63	2.48	178	7.01	115	4.53	+ 20 °C	+68 °F	1556	3499	1933	4346	109,0	6.65	1,10	2.43	✓
RG 1000 - 075 - A	75	2.95	202	7.95	127	5.00			1572	3534	1959	4404	128,0	7.81	1,19	2.62	✓
RG 1000 - 080 - A	80	3.15	212	8.35	132	5.20			1578	3546	1968	4424	136,0	8.30	1,23	2.71	✓
RG 1000 - 100 - A	100	3.94	252	9.92	152	5.98			1594	3584	1995	4485	167,0	10.19	1,39	3.06	✓
RG 1000 - 125 - A	125	4.92	302	11.89	177	6.97			1608	3615	2018	4537	207,0	12.63	1,60	3.53	✓

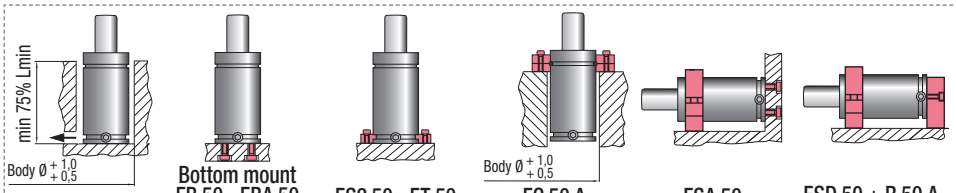

Drop-in

Bottom mount
FB 50 - FBA 50
FBB 50 - FBD 50

FS2 50 - FT 50
FS2A 50 - FTP 50

Body Ø + 1,0 + 0,5
FC 50 A
FCQC 50

FSA 50
FSD 50 - FSE 50

FSD 50 + R 50 A
FSE 50 + R 50 A

HOW TO ORDER p. 95

INSTALLATION GUIDELINE p. 203

RG 1500

SPECIAL SPRINGS

SW

OSAS + OSM = OVER STROKE ACTIVE SAFETY + OVER STROKE MARKER

ACTIVE SAFETY

OSAS

USAS

OPAS

* $F1_i$ = Isothermal end force at 100% Cu p. 18

** $F1_p$ = Polytrophic end force at 100% Cu

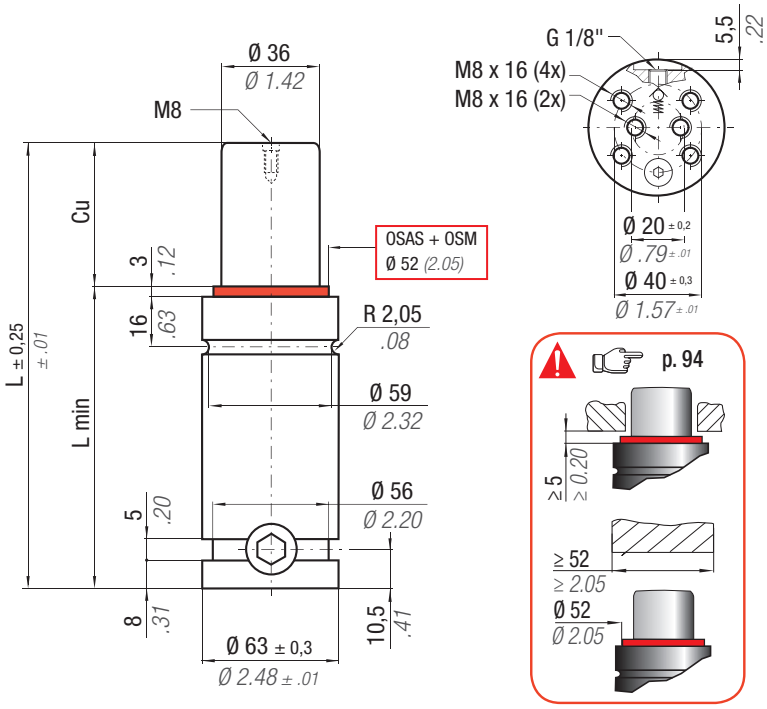

N2	°F 32 - 176	°C 0 - 80	ΔP	P max	P min	S	SPM	Max Speed	Maintenance kit
			± 0,33 %/°C	150 bar *2175 psi*	20 bar *290 psi*	10,18 cm² *1.578 in²*	~ 20 - 100 (at 20°C)	1,8 m/s	39BMRV01500C

CODE	Cu mm	Cu inch	L mm	L inch	L min mm	L min inch	Fo Initial force daN	Fo lb	$F1_i$ * End force daN	$F1_i$ lb	$F1_p$ ** End force daN	$F1_p$ lb	Vo cm³	Vo in³	~Kg	~lb	PED 2014/68/EU
RG 1500 - 010 - A	10	0.39	72	2.83	62	2.44	1530 ± 5%	3440	2071	4655	2395	5384	45,0	2.75	1,04	2.29	✓
RG 1500 - 013 - A	13	0.51	78	3.07	65	2.56			2149	4830	2515	5654	53,0	3.23	1,08	2.38	✓
RG 1500 - 016 - A	16	0.63	84	3.31	68	2.68			2210	4967	2611	5870	61,0	3.72	1,11	2.45	✓
RG 1500 - 019 - A	19	0.75	90	3.54	71	2.80			2259	5078	2688	6043	69,0	4.21	1,15	2.54	✓
RG 1500 - 025 - A	25	0.98	102	4.02	77	3.03			2333	5245	2806	6308	85,0	5.19	1,22	2.69	✓
RG 1500 - 032 - A	32	1.26	116	4.57	84	3.31			2394	5382	2904	6528	104,0	6.34	1,30	2.87	✓
RG 1500 - 038 - A	38	1.50	128	5.04	90	3.54	150 bar *2175 psi*		2433	5469	2966	6668	119,0	7.26	1,37	3.02	✓
RG 1500 - 050 - A	50	1.97	152	5.98	102	4.02			2488	5592	3055	6868	151,0	9.21	1,51	3.33	✓
RG 1500 - 063 - A	63	2.48	178	7.01	115	4.53			2527	5681	3120	7014	186,0	11.35	1,67	3.68	✓
RG 1500 - 075 - A	75	2.95	202	7.95	127	5.00	+ 20 °C *+68 °F*		2553	5739	3163	7111	218,0	13.30	1,81	3.99	✓
RG 1500 - 080 - A	80	3.15	212	8.35	132	5.20			2562	5759	3177	7142	231,0	14.09	1,87	4.12	✓
RG 1500 - 100 - A	100	3.94	252	9.92	152	5.98			2589	5821	3222	7243	284,0	17.32	2,11	4.65	✓
RG 1500 - 125 - A	125	4.92	302	11.89	177	6.97			2612	5872	3260	7329	350,0	21.35	2,40	5.29	✓

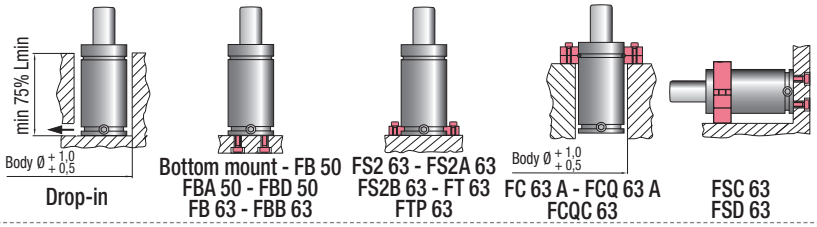

HOW TO ORDER p. 95

INSTALLATION GUIDELINE p. 203

K32D2-2400-50 (Nissan)	EM24.54.700 (Renault)		

RG 2400

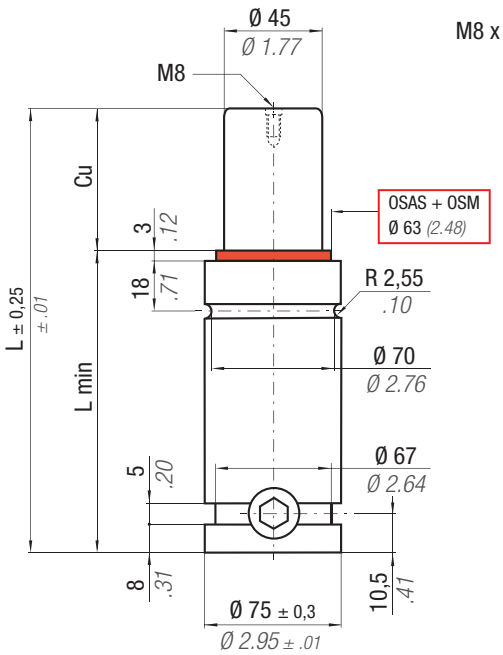

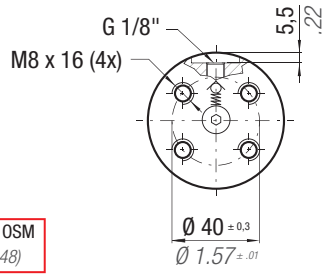

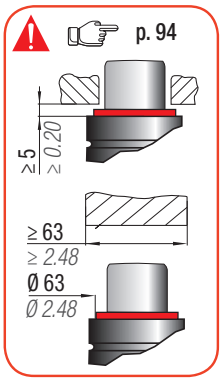

OSAS + OSM = OVER STROKE ACTIVE SAFETY + OVER STROKE MARKER

SW

easy MANIFOLD p. 241

ACTIVE SAFETY

OSAS

USAS

OPAS

* $F1_i$ = Isothermal end force at 100% Cu p. 18

** $F1_p$ = Polytrophic end force at 100% Cu

RG

N_2	°F 32 - 176	°C 0 - 80	ΔP	P max	P min	S	SPM	Max Speed	Maintenance kit
			± 0,33 %/°C	150 bar *2175 psi*	20 bar *290 psi*	15,90 cm² *2.465 in²*	~ 20 - 100 (at 20°C)	1,8 m/s	39BMRV02400D

CODE	Cu mm	Cu inch	L mm	L inch	L min mm	L min inch	F0 Initial force daN	F0 lb	$F1_i$ * End force daN	$F1_i$ lb	$F1_p$ ** End force daN	$F1_p$ lb	V0 cm³	V0 in³	~Kg	~lb	PED 2014/68/EU
RG 2400 - 010 - A	10	0.39	79	3.11	69	2.72	2385 ± 5%	5362	3125	7026	3574	8035	78,0	4.76	1,65	3.64	✓
RG 2400 - 013 - A	13	0.51	85	3.35	72	2.83			3249	7305	3763	8460	90,0	5.49	1,70	3.75	✓
RG 2400 - 016 - A	16	0.63	91	3.58	75	2.95			3350	7532	3920	8813	103,0	6.28	1,75	3.86	✓
RG 2400 - 019 - A	19	0.75	97	3.82	78	3.07			3434	7721	4051	9107	115,0	7.02	1,79	3.95	✓
RG 2400 - 025 - A	25	0.98	109	4.29	84	3.31			3566	8016	4258	9572	139,0	8.48	1,89	4.17	✓
RG 2400 - 032 - A	32	1.26	123	4.84	91	3.58			3678	8268	4436	9973	167,0	10.19	1,99	4.39	✓
RG 2400 - 038 - A	38	1.50	135	5.31	97	3.82	150 bar *2175 psi*		3751	8433	4554	10238	191,0	11.65	2,09	4.61	✓
RG 2400 - 050 - A	50	1.97	159	6.26	109	4.29			3858	8672	4726	10624	239,0	14.58	2,28	5.03	✓
RG 2400 - 063 - A	63	2.48	185	7.28	122	4.80			3937	8850	4855	10914	292,0	17.81	2,49	5.49	✓
RG 2400 - 075 - A	75	2.95	209	8.23	134	5.28	+ 20 °C *+68 °F*		3989	8969	4942	11110	340,0	20.74	2,68	5.91	✓
RG 2400 - 080 - A	80	3.15	219	8.62	139	5.47			4008	9010	4972	11178	360,1	21.97	2,75	6.06	✓
RG 2400 - 100 - A	100	3.94	259	10.20	159	6.26			4065	9138	5066	11389	441,0	26.90	3,07	6.77	✓
RG 2400 - 125 - A	125	4.92	309	12.17	184	7.24			4113	9247	5147	11571	541,0	33.00	3,46	7.63	✓

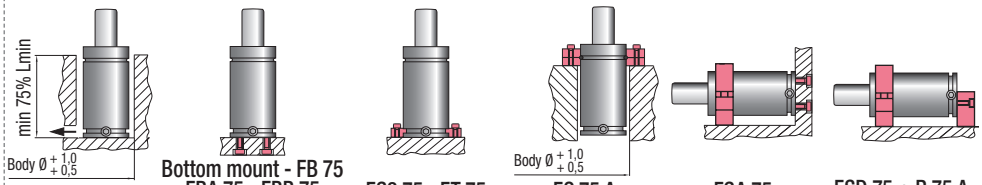

Drop-in

Bottom mount - FB 75
FBA 75 - FBB 75
FBC 75 - FBD 75

FS2 75 - FT 75
FS2A 75 - FTP 75

Body Ø + 1,0 + 0,5
FC 75 A
FCQC 75

FSA 75
FSD 75 - FSE 75

FSD 75 + R 75 A
FSE 75 + R 75 A

HOW TO ORDER p. 95

INSTALLATION GUIDELINE p. 203

RG 4200

K32D2-2400-50 (Nissan)	EM24.54.700 (Renault)		

SPECIAL SPRINGS

SW

OSAS + OSM = OVER STROKE ACTIVE SAFETY + OVER STROKE MARKER

ACTIVE SAFETY

easy MANIFOLD p. 241

OSAS

USAS

OPAS

* $F1_i$ = Isothermal end force at 100% Cu p. 18

** $F1_p$ = Polytrophic end force at 100% Cu

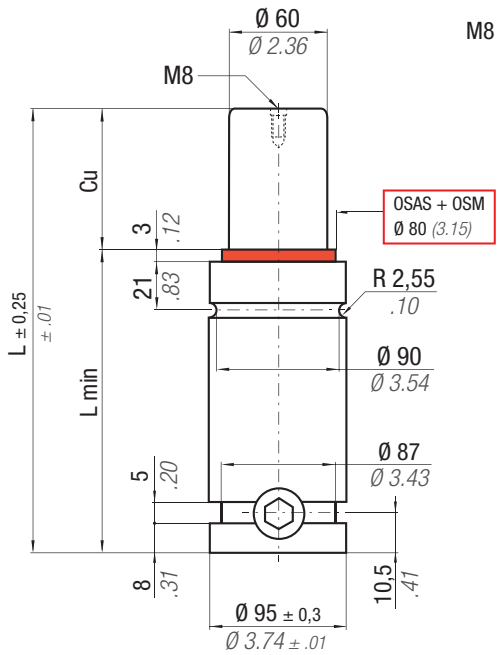

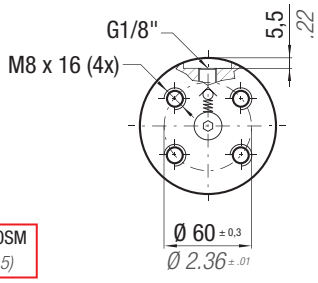

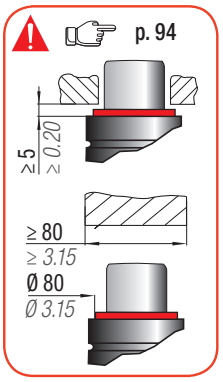

N_2	°F 32 - 176	°C 0 - 80	ΔP	P max	P min	S	SPM	Max Speed	Maintenance kit
			± 0,33 %/°C	150 bar *2175 psi*	20 bar *290 psi*	28,27 cm² *4.382 in²*	~ 20 - 100 (at 20°C)	1,8 m/s	39BMRV04200C

CODE	Cu mm	Cu inch	L mm	L inch	L min mm	L min inch	F0 Initial force daN	F0 lb	$F1_i$ * End force daN	$F1_i$ lb	$F1_p$ ** End force daN	$F1_p$ lb	V0 cm³	V0 in³	~Kg	~lb	PED 2014/68/EU
RG 4200 - 016 - A	16	0.63	94	3.70	78	3.07	4240 ± 5%	9532	6073	13653	7150	16074	174,0	10.61	2,98	6.57	✓
RG 4200 - 019 - A	19	0.75	100	3.94	81	3.19			6238	14024	7409	16656	194,0	11.83	3,05	6.72	✓
RG 4200 - 025 - A	25	0.98	112	4.41	87	3.43			6499	14609	7823	17587	235,0	14.34	3,20	7.05	✓
RG 4200 - 032 - A	32	1.26	126	4.96	94	3.70			6723	15113	8183	18396	282,0	17.20	3,38	7.45	✓
RG 4200 - 038 - A	38	1.50	138	5.43	100	3.94			6870	15443	8421	18931	323,0	19.70	3,52	7.76	✓
RG 4200 - 050 - A	50	1.97	162	6.38	112	4.41	150 bar *2175 psi*		7085	15928	8774	19725	404,0	24.64	3,82	8.42	✓
RG 4200 - 063 - A	63	2.48	188	7.40	125	4.92			7246	16289	9039	20320	492,0	30.01	4,15	9.15	✓
RG 4200 - 075 - A	75	2.95	212	8.35	137	5.39			7354	16533	9219	20725	573,0	34.95	4,45	9.81	✓
RG 4200 - 080 - A	80	3.15	222	8.74	142	5.59	+ 20 °C *+68 °F*		7391	16616	9281	20865	606,0	36.97	4,57	10.08	✓
RG 4200 - 100 - A	100	3.94	262	10.31	162	6.38			7509	16880	9477	21305	742,0	45.26	5,07	11.18	✓
RG 4200 - 125 - A	125	4.92	312	12.28	187	7.36			7609	17105	9645	21683	911,0	55.57	5,69	12.54	✓

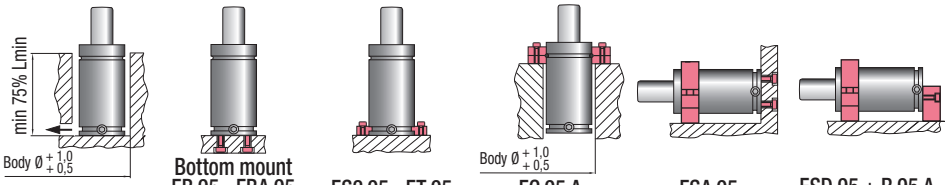

Drop-in | Bottom mount FB 95 - FBA 95 FBB 95 | FS2 95 - FT 95 FS2A 95 - FTP 95 | FC 95 A FCQC 95 | FSA 95 FSD 95 - FSE 95 | FSD 95 + R 95 A FSE 95 + R 95 A

HOW TO ORDER p. 95

INSTALLATION GUIDELINE p. 203

K32D2-2400-50 (Nissan)	EM24.54.700 (Renault)		

RG 6600

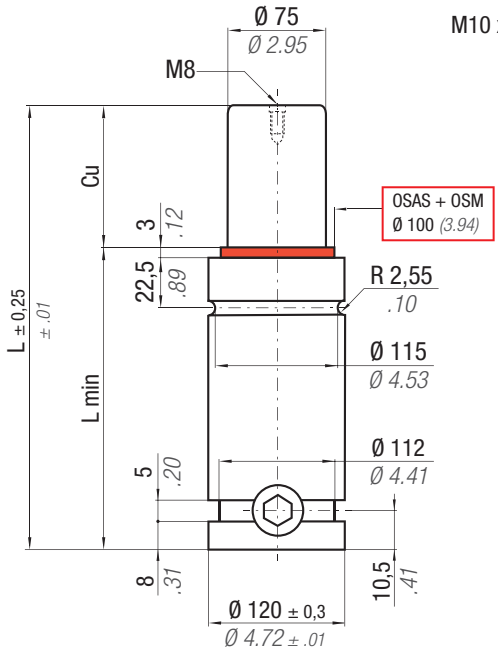

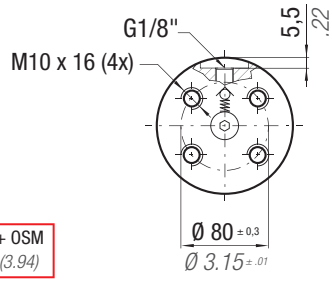

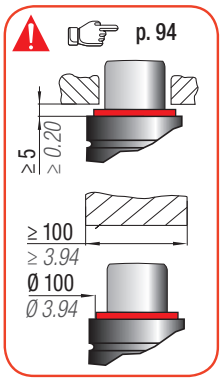

OSAS + OSM = OVER STROKE ACTIVE SAFETY + OVER STROKE MARKER

SW

easy MANIFOLD p. 241

ACTIVE SAFETY

OSAS

USAS

OPAS

* $F1_i$ = Isothermal end force at 100% Cu p. 18

** $F1_p$ = Polytrophic end force at 100% Cu

RG

N_2	°F 32 - 176	°C 0 - 80	ΔP	P max	P min	S	SPM	Max Speed	Maintenance kit
			± 0,33 %/°C	150 bar / 2175 psi	20 bar / 290 psi	44,18 cm² / 6.848 in²	~ 20 - 100 (at 20°C)	1,8 m/s	39BMRV06600C

CODE	Cu mm	Cu inch	L mm	L inch	L min mm	L min inch	F0 Initial force daN	F0 lb	$F1_i$ * End force daN	$F1_i$ lb	$F1_p$ ** End force daN	$F1_p$ lb	V0 cm³	V0 in³	~Kg	~lb	PED 2014/68/EU
RG 6600 - 016 - A	16	0.63	104	4.09	88	3.46	6630 ± 5%	14904	9032	20306	10464	23524	309,0	18.85	5,40	11.90	✓
RG 6600 - 019 - A	19	0.75	110	4.33	91	3.58			9281	20864	10847	24385	341,0	20.80	5,52	12.17	✓
RG 6600 - 025 - A	25	0.98	122	4.80	97	3.82			9684	21771	11478	25804	405,0	24.71	5,76	12.70	✓
RG 6600 - 032 - A	32	1.26	136	5.35	104	4.09			10044	22579	12047	27083	479,0	29.22	6,04	13.32	✓
RG 6600 - 038 - A	38	1.50	148	5.83	110	4.33			10286	23124	12435	27955	544,0	33.18	6,28	13.85	✓
RG 6600 - 050 - A	50	1.97	172	6.77	122	4.80	150 bar	2175 psi	10652	23946	13025	29281	672,0	40.99	6,76	14.90	✓
RG 6600 - 063 - A	63	2.48	198	7.80	135	5.31			10932	24577	13483	30311	811,0	49.47	7,28	16.05	✓
RG 6600 - 075 - A	75	2.95	222	8.74	147	5.79	+ 20 °C	+68 °F	11125	25011	13800	31024	939,0	57.28	7,75	17.09	✓
RG 6600 - 080 - A	80	3.15	232	9.13	152	5.98			11193	25162	13910	31271	992,0	60.51	7,95	17.53	✓
RG 6600 - 100 - A	100	3.94	272	10.71	172	6.77			11407	25643	14264	32067	1206,0	73.57	8,75	19.29	✓
RG 6600 - 125 - A	125	4.92	322	12.68	197	7.76			11593	26061	14574	32764	1473,0	89.85	9,75	21.50	✓

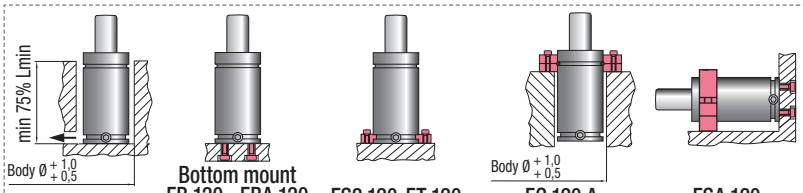

Drop-in

Bottom mount
FB 120 - FBA 120
FBB 120

FS2 120-FT 120
FS2A 120-FTP 120

Body Ø + 1,0 + 0,5
FC 120 A
FCQC 120

FSA 120
FSD 120

HOW TO ORDER p. 95

INSTALLATION GUIDELINE p. 203

Mazda	Nissan	PSA
Renault	Toyota	

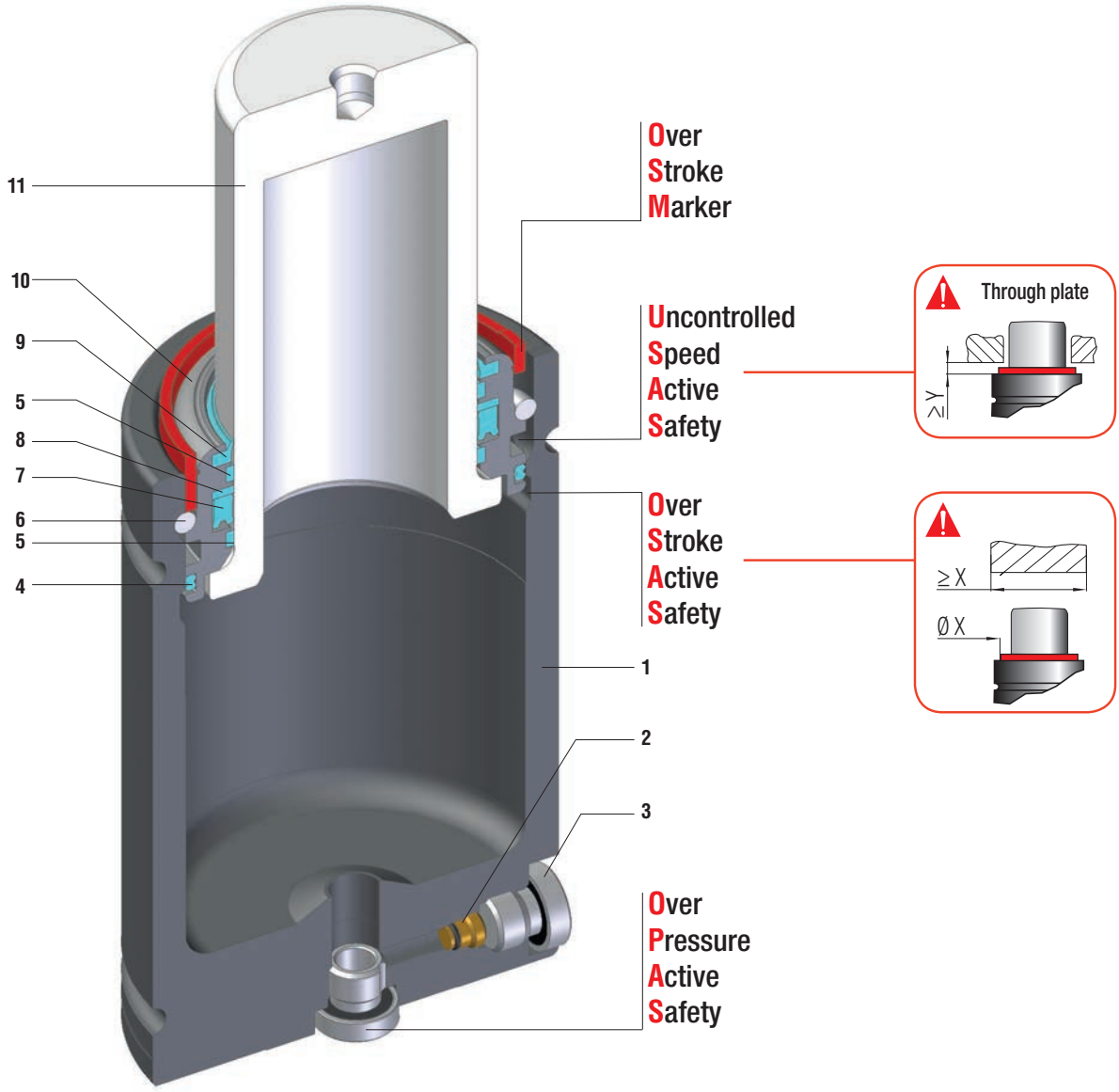

Minima altezza, massima forza, collegabili G1/8 - Minimum height, maximum force, hose cylinders with G1/8 charging port
Minimale Höhe, maximale Kraft, Gdf. mit G1/8 Öffnung verbindbar - Hauteur minimale, force maximale, cylindres raccordés avec trou G1/8 gaz
Mínima altura, máxima fuerza, cilindros conectados con agujero G1/8 gas - Altura mínima, força máxima, cilindros conectados com furo G1/8 gás

SEALING	ROD SEAL
DESIGN	BUSH - BODY DESIGN

1	Body	**5**	Guide ring	**9**	Rod wiper
2	Valve	**6**	Retaining ring	**10**	Bush
3	Plug	**7**	Rod seal	**11**	Rod (nitrited superfinished)
4	Dual ring seal	**8**	Back-up ring		

RANGE CHART

Model	Body Ø		Stroke Cu		Initial force F0		OSAS	USAS	OPAS	SKUDO	SW
	mm	inch	mm	inch	daN	lb					
RT 350	32	1.26	10 - 125	0.39 - 4.92	360	809	✓	✓	✓	-	✓
RT 500	38	1.50	10 - 125	0.39 - 4.92	470	1057	✓	✓	✓	-	✓
RT 750	45	1.77	10 - 125	0.39 - 4.92	740	1664	✓	✓	✓	-	✓
RT 1000	50	1.97	10 - 125	0.39 - 4.92	920	2068	✓	✓	✓	-	✓
RT 1200	50	1.97	10 - 125	0.39 - 4.92	1060	2383	✓	✓	✓	-	✓
RT 1500	63	2.48	10 - 125	0.39 - 4.92	1530	3440	✓	✓	✓	-	✓
RT 2400	75	2.95	10 - 125	0.39 - 4.92	2385	5362	✓	✓	✓	-	✓
RT 4200	95	3.74	16 - 125	0.63 - 4.92	4240	9532	✓	✓	✓	-	✓
RT 6600	120	4.72	16 - 125	0.63 - 4.92	6630	14905	✓	✓	✓	-	✓
RT 9500	150	5.91	19 - 125	0.75 - 4.92	9540	21447	✓	✓	✓	-	✓

✓ Built-in as standard ✓ Optional upon request

HOW TO ORDER

Series — Revision code

Model

RT 2400-050-A-E-W

Stroke — Version

Available versions

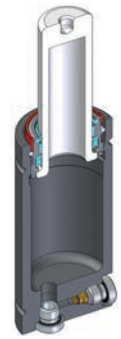

RT 2400-050-A

Standard code

Self contained

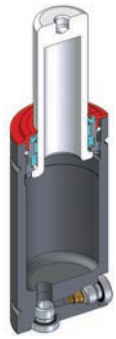

RT 2400-050-A-W

Add "-W" to standard code

Self contained

+

Secondary wiper

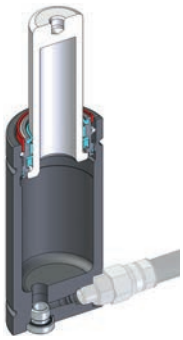

RT 2400-050-A-N

Add "-N" to standard code

Linkable

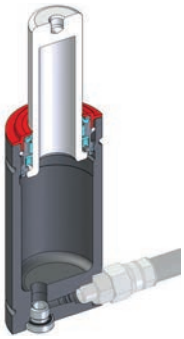

RT 2400-050-A-N-W

Add "-N-W" to standard code

Linkable

+

Secondary wiper

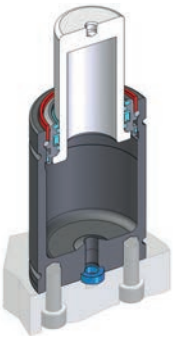

RT 2400-050-A-E

Add "-E" to standard code

Easy Manifold

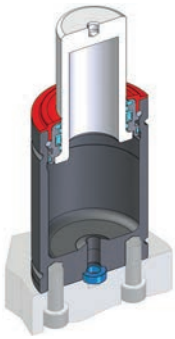

RT 2400-050-A-E-W

Add "-E-W" to standard code

Easy Manifold

+

Secondary wiper

RT 350

PG24D (Mazda)		

SPECIAL SPRINGS

SW

OSAS + OSM = OVER STROKE ACTIVE SAFETY + OVER STROKE MARKER

ACTIVE SAFETY

OSAS

USAS

OPAS

* $F1_i$ = Isothermal end force at 100% Cu p. 18

** $F1_p$ = Polytrophic end force at 100% Cu

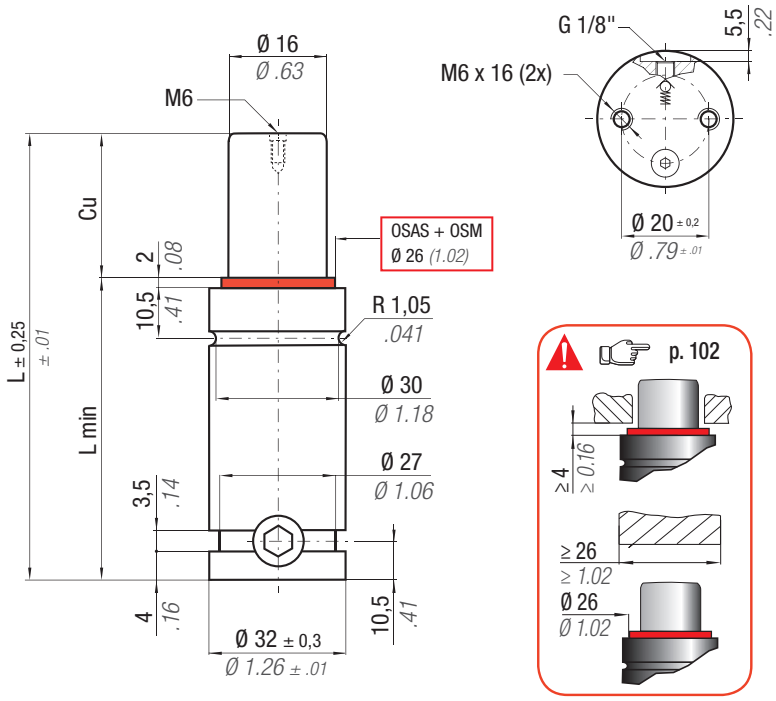

N2	°F 32 - 176	°C 0 - 80	ΔP	P max	P min	S	SPM	Max Speed	Maintenance kit
			± 0,33 %/°C	180 bar *2610 psi*	20 bar *290 psi*	2,01 cm² *0.312 in²*	~ 20 - 100 (at 20°C)	1,8 m/s	39BMRV00350C

CODE	Cu mm	Cu inch	L mm	L inch	L min mm	L min inch	Fo Initial force daN	Fo lb	$F1_i$ End force * daN	$F1_i$ lb	$F1_p$ End force ** daN	$F1_p$ lb	Vo cm³	Vo in³	~Kg	~lb	PED 2014/68/EU
RT 350 - 010 - A	10	0.39	60	2.36	50	1.97	360 ± 5%	809	523	1176	596	1340	8,0	0.49	0,22	0.48	✓
RT 350 - 013 - A	13	0.51	66	2.60	53	2.09			536	1206	615	1384	10,0	0.61	0,23	0.50	✓
RT 350 - 016 - A	16	0.63	72	2.83	56	2.20			546	1228	629	1415	12,0	0.73	0,24	0.52	✓
RT 350 - 019 - A	19	0.75	78	3.07	59	2.32			553	1244	640	1439	13,0	0.79	0,25	0.54	✓
RT 350 - 025 - A	25	0.98	90	3.54	65	2.56			564	1267	655	1472	17,0	1.04	0,27	0.60	✓
RT 350 - 032 - A	32	1.26	104	4.09	72	2.83			571	1285	666	1497	21,0	1.28	0,29	0.64	✓
RT 350 - 038 - A	38	1.50	116	4.57	78	3.07	180 bar *2610psi*		576	1295	673	1513	25,0	1.53	0,31	0.68	✓
RT 350 - 050 - A	50	1.97	140	5.51	90	3.54			582	1309	682	1533	32,0	1.95	0,35	0.77	✓
RT 350 - 063 - A	63	2.48	166	6.54	103	4.06			587	1319	688	1547	40,0	2.44	0,39	0.86	✓
RT 350 - 075 - A	75	2.95	190	7.48	115	4.53	+ 20 °C *+68 °F*		589	1325	692	1556	47,0	2.87	0,43	0.95	✓
RT 350 - 080 - A	80	3.15	200	7.87	120	4.72			590	1327	693	1559	50,0	3.05	0,45	0.99	✓
RT 350 - 100 - A	100	3.94	240	9.45	140	5.51			593	1333	698	1568	62,0	3.79	0,51	1.12	✓
RT 350 - 125 - A	125	4.92	290	11.42	165	6.50			595	1338	701	1576	77,0	4.71	0,59	1.30	✓

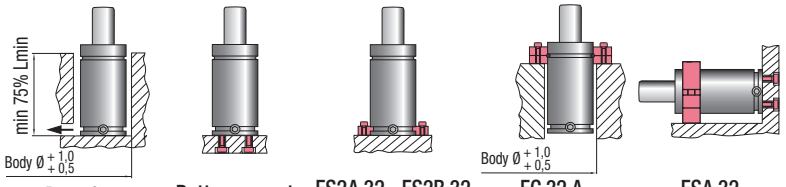

Drop-in | Bottom mount | FS2A 32 - FS2B 32 FS2C 32 | FC 32 A FCQC 32 | FSA 32 FSD 32

HOW TO ORDER p. 103

INSTALLATION GUIDELINE p. 203

PG24D (Mazda)		

RT 500

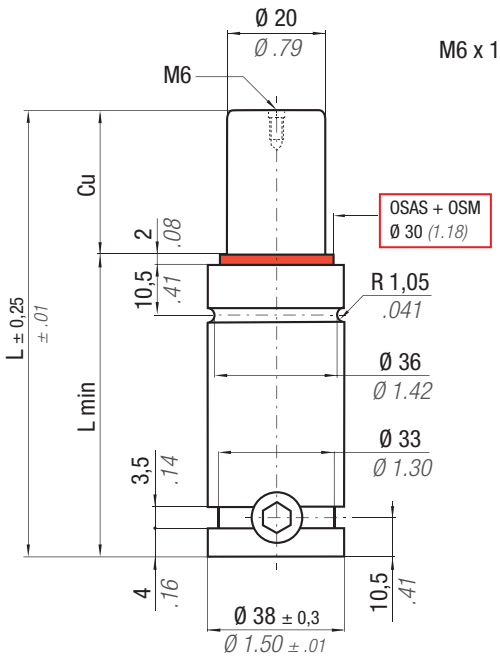

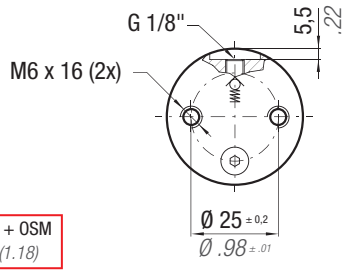

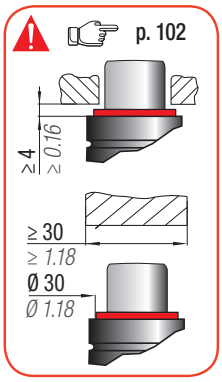

OSAS + OSM = OVER STROKE ACTIVE SAFETY + OVER STROKE MARKER

SW

ACTIVE SAFETY

OSAS

USAS

OPAS

* $F1_i$ = Isothermal end force at 100% Cu p. 18

** $F1_p$ = Polytrophic end force at 100% Cu

RT

N2	°F 32 - 176	°C 0 - 80	ΔP	P max	P min	S	SPM	Max Speed	Maintenance kit
			± 0,33 %/°C	150 bar / 2175 psi	20 bar / 290 psi	3,14 cm² / 0.487 in²	~ 20 - 100 (at 20°C)	1,8 m/s	39BMRV00500C

CODE	Cu mm	Cu inch	L mm	L inch	L min mm	L min inch	F0 Initial force daN	F0 lb	$F1_i$ * End force daN	$F1_i$ lb	$F1_p$ ** End force daN	$F1_p$ lb	V0 cm³	V0 in³	~Kg	~lb	PED 2014/68/EU
RT 500 - 010 - A	10	0.39	60	2.36	50	1.97	470 ± 5%	1057	692	1555	821	1845	11,0	0.67	0,32	0.71	✓
RT 500 - 013 - A	13	0.51	66	2.60	53	2.09			711	1598	851	1914	14,0	0.85	0,34	0.75	✓
RT 500 - 016 - A	16	0.63	72	2.83	56	2.20			725	1629	873	1963	17,0	1.04	0,36	0.79	✓
RT 500 - 019 - A	19	0.75	78	3.07	59	2.32			735	1652	890	2001	19,0	1.16	0,37	0.82	✓
RT 500 - 025 - A	25	0.98	90	3.54	65	2.56			750	1685	914	2054	24,0	1.46	0,40	0.88	✓
RT 500 - 032 - A	32	1.26	104	4.09	72	2.83			761	1710	932	2094	30,0	1.83	0,43	0.95	✓
RT 500 - 038 - A	38	1.50	116	4.57	78	3.07	150 bar	2175psi	767	1725	942	2119	36,0	2.20	0,46	1.01	✓
RT 500 - 050 - A	50	1.97	140	5.51	90	3.54			776	1746	957	2152	46,0	2.81	0,52	1.15	✓
RT 500 - 063 - A	63	2.48	166	6.54	103	4.06			783	1759	967	2175	57,0	3.48	0,58	1.28	✓
RT 500 - 075 - A	75	2.95	190	7.48	115	4.53	+ 20 °C	+68 °F	787	1768	974	2189	67,0	4.09	0,63	1.39	✓
RT 500 - 080 - A	80	3.15	200	7.87	120	4.72			788	1771	976	2194	72,0	4.39	0,66	1.46	✓
RT 500 - 100 - A	100	3.94	240	9.45	140	5.51			792	1780	983	2209	89,0	5.43	0,75	1.65	✓
RT 500 - 125 - A	125	4.92	290	11.42	165	6.50			795	1788	988	2221	110,0	6.71	0,87	1.92	✓

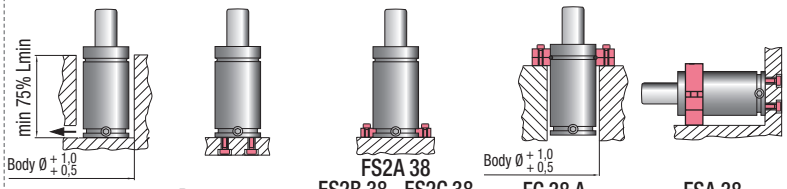

HOW TO ORDER p. 103

INSTALLATION GUIDELINE p. 203

RT 750

PG24D (Mazda)	K 32 R (Nissan)	EM24.54.700 (Renault)

SPECIAL SPRINGS

SW

OSAS + OSM = OVER STROKE ACTIVE SAFETY + OVER STROKE MARKER

ACTIVE SAFETY

OSAS

USAS

OPAS

* $F1_i$ = Isothermal end force at 100% Cu p. 18

** $F1_p$ = Polytrophic end force at 100% Cu

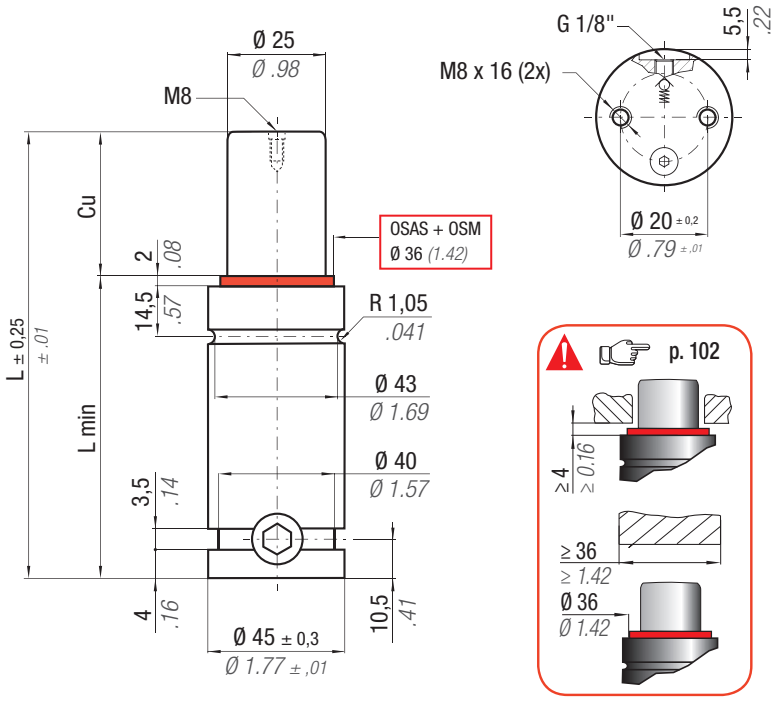

N2	°F 32 - 176	°C 0 - 80	ΔP	P max	P min	S	SPM	Max Speed	Maintenance kit
			± 0,33 %/°C	150 bar *2175 psi*	20 bar *290 psi*	4,91 cm² *0.761 in²*	~ 20 - 100 (at 20°C)	1,8 m/s	39BMRV00750C

CODE	Cu mm	Cu inch	L mm	L inch	L min mm	L min inch	Fo Initial force daN	Fo lb	$F1_i$ * End force daN	$F1_i$ lb	$F1_p$ ** End force daN	$F1_p$ lb	Vo cm³	Vo in³	~Kg	~lb	PED 2014/68/EU
RT 750 - 010 - A	10	0.39	67	2.64	57	2.24	740 ± 5%	1664	1018	2288	1184	2662	21,0	1.28	0,50	1.10	✓
RT 750 - 013 - A	13	0.51	73	2.87	60	2.36			1056	2373	1243	2794	24,0	1.46	0,52	1.15	✓
RT 750 - 016 - A	16	0.63	79	3.11	63	2.48			1085	2439	1289	2898	28,0	1.71	0,54	1.19	✓
RT 750 - 019 - A	19	0.75	85	3.35	66	2.60			1108	2492	1326	2981	32,0	1.95	0,56	1.23	✓
RT 750 - 025 - A	25	0.98	97	3.82	72	2.83			1143	2570	1382	3107	40,0	2.44	0,60	1.32	✓
RT 750 - 032 - A	32	1.26	111	4.37	79	3.11			1172	2634	1428	3210	49,0	2.99	0,64	1.41	✓
RT 750 - 038 - A	38	1.50	123	4.84	85	3.35	150 bar *2175psi*		1189	2674	1457	3275	56,0	3.42	0,68	1.50	✓
RT 750 - 050 - A	50	1.97	147	5.79	97	3.82			1214	2730	1497	3365	72,0	4.39	0,76	1.68	✓
RT 750 - 063 - A	63	2.48	173	6.81	110	4.33	+ 20 °C *+68 °F*		1232	2770	1527	3433	88,0	5.37	0,84	1.85	✓
RT 750 - 075 - A	75	2.95	197	7.76	122	4.80			1244	2796	1546	3476	103,0	6.28	0,92	2.03	✓
RT 750 - 080 - A	80	3.15	207	8.15	127	5.00			1248	2805	1552	3489	110,0	6.71	0,95	2.09	✓
RT 750 - 100 - A	100	3.94	247	9.72	147	5.79			1260	2832	1573	3536	135,0	8.24	1,08	2.38	✓
RT 750 - 125 - A	125	4.92	297	11.69	172	6.77			1270	2855	1589	3572	167,0	10.19	1,24	2.73	✓

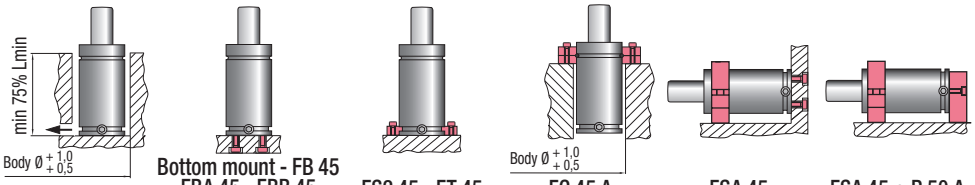

Drop-in

Bottom mount - FB 45
FBA 45 - FBB 45
FBD 45 - FBF 45

FS2 45 - FT 45
FS2A 45 - FTP 45

Body Ø + 1,0 + 0,5
FC 45 A
FCQC 45

FSA 45
FSD 45 - FSE 45

FSA 45 + R 50 A
FSE 45 + R 50 A

HOW TO ORDER p. 103

INSTALLATION GUIDELINE p. 203

K 32 R (Nissan)	E24.54.815.G (PSA)	EM24.54.700 (Renault)
SMS DNH 3203n Rev.3 (TOYOTA)		

RT 1000

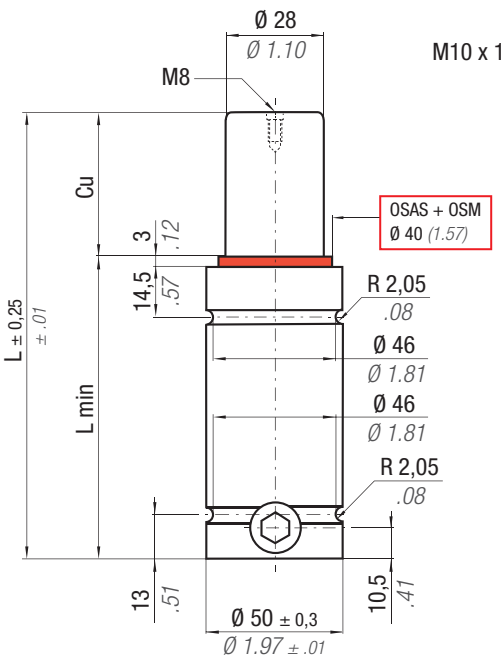

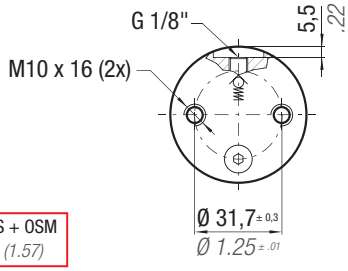

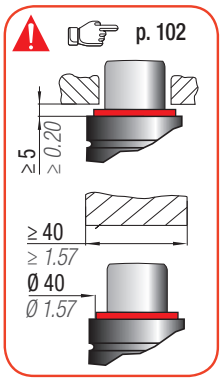

OSAS + OSM = OVER STROKE ACTIVE SAFETY + OVER STROKE MARKER

SW

* $F1_i$ = Isothermal end force at 100% Cu p. 18

** $F1_p$ = Polytrophic end force at 100% Cu

ACTIVE SAFETY

OSAS

USAS

OPAS

RT

N2	°F 32 - 176 / °C 0 - 80	ΔP	P max	P min	S	SPM	Max Speed	Maintenance kit
		± 0,33 %/°C	150 bar *2175 psi*	20 bar *290 psi*	6,15 cm² *0.953 in²*	~ 20 - 100 (at 20°C)	1,8 m/s	39BMRV01000C

CODE	Cu mm	Cu inch	L mm	L inch	L min mm	L min inch	F0 Initial force daN	F0 lb	$F1_i$ * End force daN	$F1_i$ lb	$F1_p$ ** End force daN	$F1_p$ lb	V0 cm³	V0 in³	~Kg	~lb	PED 2014/68/EU
RT 1000 - 010 - A	10	0.39	72	2.83	62	2.44	920 ± 5%	2068	1274	2863	1481	3329	26,0	1.59	0,68	1.50	✓
RT 1000 - 013 - A	13	0.51	78	3.07	65	2.56			1323	2973	1557	3500	31,0	1.89	0,70	1.54	✓
RT 1000 - 016 - A	16	0.63	84	3.31	68	2.68			1361	3059	1617	3635	35,0	2.14	0,73	1.61	✓
RT 1000 - 019 - A	19	0.75	90	3.54	71	2.80			1391	3128	1666	3745	40,0	2.44	0,75	1.65	✓
RT 1000 - 025 - A	25	0.98	102	4.02	77	3.03			1437	3232	1739	3909	50,0	3.05	0,80	1.76	✓
RT 1000 - 032 - A	32	1.26	116	4.57	84	3.31			1475	3316	1800	4047	61,0	3.72	0,86	1.90	✓
RT 1000 - 038 - A	38	1.50	128	5.04	90	3.54	150 bar *2175 psi*		1499	3369	1838	4132	70,0	4.27	0,90	1.98	✓
RT 1000 - 050 - A	50	1.97	152	5.98	102	4.02			1532	3445	1893	4256	89,0	5.43	1,00	2.20	✓
RT 1000 - 063 - A	63	2.48	178	7.01	115	4.53	+ 20 °C *+68 °F*		1556	3499	1933	4346	109,0	6.65	1,10	2.43	✓
RT 1000 - 075 - A	75	2.95	202	7.95	127	5.00			1572	3534	1959	4404	128,0	7.81	1,20	2.65	✓
RT 1000 - 080 - A	80	3.15	212	8.35	132	5.20			1578	3546	1968	4424	136,0	8.30	1,24	2.73	✓
RT 1000 - 100 - A	100	3.94	252	9.92	152	5.98			1594	3584	1995	4485	167,0	10.19	1,40	3.09	✓
RT 1000 - 125 - A	125	4.92	302	11.89	177	6.97			1608	3615	2018	4537	207,0	12.63	1,60	3.53	✓

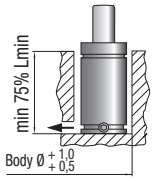

Drop-in

Bottom mount FBF 50

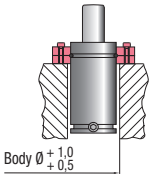

FC 50 A FCQC 50

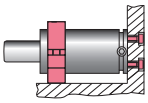

FSA 50 FSD 50 - FSE 50

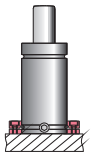

FS1 50

HOW TO ORDER p. 103

INSTALLATION GUIDELINE p. 203

RT 1200

SPECIAL SPRINGS

SW

OSAS + OSM = OVER STROKE ACTIVE SAFETY + OVER STROKE MARKER

ACTIVE SAFETY

OSAS

USAS

OPAS

* $F1_i$ = Isothermal end force at 100% Cu p. 18

** $F1_p$ = Polytrophic end force at 100% Cu

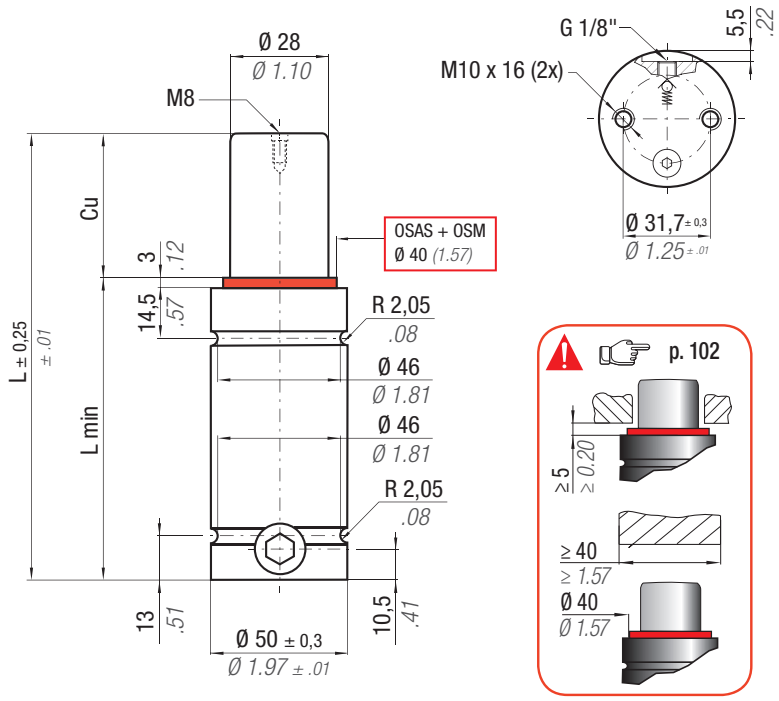

N2	°F 32 - 176	°C 0 - 80	ΔP	P max	P min	S	SPM	Max Speed	Maintenance kit
			± 0,33 %/°C	170 bar *2465 psi*	20 bar *290 psi*	6,15 cm² *0.953 in²*	~ 20 - 100 (at 20°C)	1,8 m/s	39BMRV01000C

CODE	Cu mm	Cu inch	L mm	L inch	L min mm	L min inch	Fo Initial force daN	Fo lb	$F1_i$ * End force daN	$F1_i$ lb	$F1_p$ ** End force daN	$F1_p$ lb	Vo cm³	Vo in³	~Kg	~lb	PED 2014/68/EU
RT 1200 - 010 - A	10	0.39	72	2.83	62	2.44	1060 ± 5%	2383	1462	3287	1670	3754	26,0	1.59	0,68	1.50	✓
RT 1200 - 013 - A	13	0.51	78	3.07	65	2.56			1521	3419	1755	3946	31,0	1.89	0,70	1.54	✓
RT 1200 - 016 - A	16	0.63	84	3.31	68	2.68			1566	3522	1823	4098	35,0	2.14	0,73	1.61	✓
RT 1200 - 019 - A	19	0.75	90	3.54	71	2.80			1603	3604	1878	4221	40,0	2.44	0,75	1.65	✓
RT 1200 - 025 - A	25	0.98	102	4.02	77	3.03			1658	3728	1961	4408	50,0	3.05	0,80	1.76	✓
RT 1200 - 032 - A	32	1.26	116	4.57	84	3.31			1704	3830	2029	4562	61,0	3.72	0,86	1.90	✓
RT 1200 - 038 - A	38	1.50	128	5.04	90	3.54	170 bar *2465 psi*		1732	3894	2073	4660	70,0	4.27	0,90	1.98	✓
RT 1200 - 050 - A	50	1.97	152	5.98	102	4.02			1772	3985	2134	4798	89,0	5.43	1,00	2.20	✓
RT 1200 - 063 - A	63	2.48	178	7.01	115	4.53	+ 20 °C *+68 °F*		1801	4050	2179	4899	109,0	6.65	1,10	2.43	✓
RT 1200 - 075 - A	75	2.95	202	7.95	127	5.00			1820	4092	2208	4965	128,0	7.81	1,20	2.65	✓
RT 1200 - 080 - A	80	3.15	212	8.35	132	5.20			1827	4107	2218	4987	136,0	8.30	1,24	2.73	✓
RT 1200 - 100 - A	100	3.94	252	9.92	152	5.98			1847	4152	2249	5057	167,0	10.19	1,40	3.09	✓
RT 1200 - 125 - A	125	4.92	302	11.89	177	6.97			1864	4190	2275	5115	207,0	12.63	1,60	3.53	✓

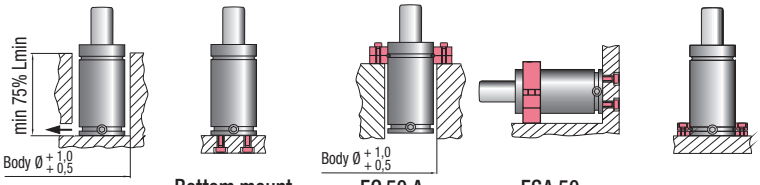

Drop-in | Bottom mount FBF 50 | FC 50 A FCQC 50 | FSA 50 FSD 50 - FSE 50 | FS1 50

HOW TO ORDER p. 103

INSTALLATION GUIDELINE p. 203

RT 1500

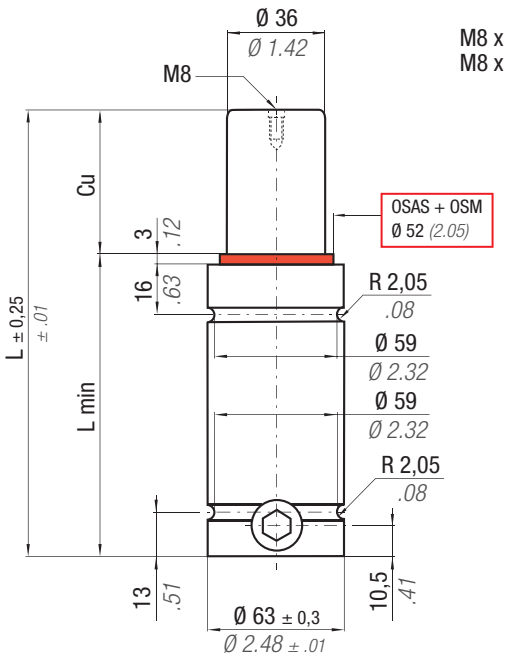

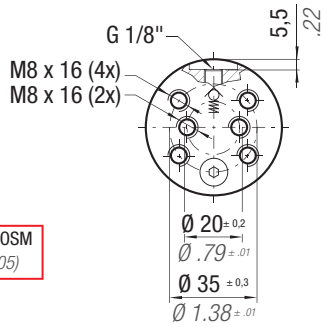

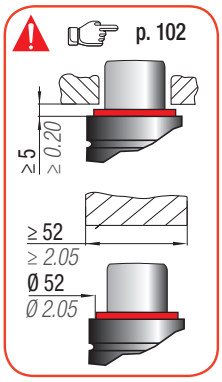

OSAS + OSM = OVER STROKE ACTIVE SAFETY + OVER STROKE MARKER

SW

* $F1_i$ = Isothermal end force at 100% Cu p. 18

** $F1_p$ = Polytrophic end force at 100% Cu

ACTIVE SAFETY

OSAS

USAS

OPAS

RT

N_2	°F 32 - 176	°C 0 ~ 80	ΔP	P max	P min	S	SPM	Max Speed	Maintenance kit
			± 0,33 %/°C	150 bar *2175 psi*	20 bar *290 psi*	10,18 cm² *1.578 in²*	~ 20 - 100 (at 20°C)	1,8 m/s	39BMRV01500C

CODE	Cu mm	Cu inch	L mm	L inch	L min mm	L min inch	F0 Initial force daN	F0 lb	$F1_i$ End force * daN	$F1_i$ lb	$F1_p$ End force ** daN	$F1_p$ lb	V0 cm³	V0 in³	~Kg	~lb	PED 2014/68/EU
RT 1500 - 010 - A	10	0.39	72	2.83	62	2.44	1530 ± 5%	3440	2071	4655	2395	5384	45,0	2.75	1,05	2.31	✓
RT 1500 - 013 - A	13	0.51	78	3.07	65	2.56			2149	4830	2515	5654	53,0	3.23	1,09	2.40	✓
RT 1500 - 016 - A	16	0.63	84	3.31	68	2.68			2210	4967	2611	5870	61,0	3.72	1,13	2.49	✓
RT 1500 - 019 - A	19	0.75	90	3.54	71	2.80			2258	5076	2687	6041	69,0	4.21	1,16	2.56	✓
RT 1500 - 025 - A	25	0.98	102	4.02	77	3.03			2333	5245	2806	6308	85,0	5.19	1,23	2.71	✓
RT 1500 - 032 - A	32	1.26	116	4.57	84	3.31			2394	5382	2904	6528	104,0	6.34	1,31	2.89	✓
RT 1500 - 038 - A	38	1.50	128	5.04	90	3.54	150 bar *2175 psi*		2433	5469	2966	6668	119,0	7.26	1,38	3.04	✓
RT 1500 - 050 - A	50	1.97	152	5.98	102	4.02			2488	5592	3055	6868	151,0	9.21	1,53	3.37	✓
RT 1500 - 063 - A	63	2.48	178	7.01	115	4.53	+ 20 °C *+68 °F*		2527	5681	3120	7014	186,0	11.35	1,69	3.73	✓
RT 1500 - 075 - A	75	2.95	202	7.95	127	5.00			2553	5739	3163	7111	218,0	13.30	1,83	4.03	✓
RT 1500 - 080 - A	80	3.15	212	8.35	132	5.20			2562	5759	3177	7142	231,0	14.09	1,89	4.17	✓
RT 1500 - 100 - A	100	3.94	252	9.92	152	5.98			2589	5821	3222	7243	284,0	17.32	2,12	4.67	✓
RT 1500 - 125 - A	125	4.92	302	11.89	177	6.97			2612	5872	3260	7329	350,0	21.35	2,41	5.31	✓

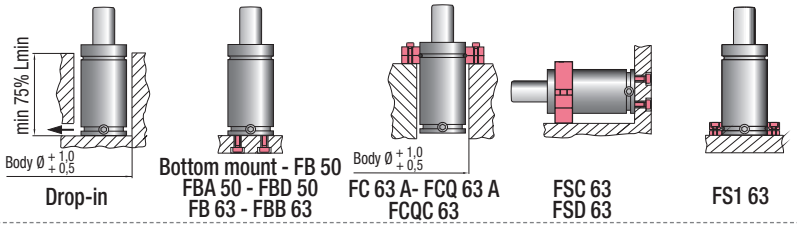

HOW TO ORDER

p. 103

INSTALLATION GUIDELINE

p. 203

RT 2400

K 32 R (Nissan)	E24.54.815.G (PSA)	EM24.54.700 (Renault)
SMS DNH 3203n Rev.3 (TOYOTA)		

SPECIAL SPRINGS

SW

OSAS + OSM = OVER STROKE ACTIVE SAFETY + OVER STROKE MARKER

ACTIVE SAFETY

easy MANIFOLD p. 241

OSAS

USAS

OPAS

* $F1_i$ = Isothermal end force at 100% Cu p. 18

** $F1_p$ = Polytrophic end force at 100% Cu

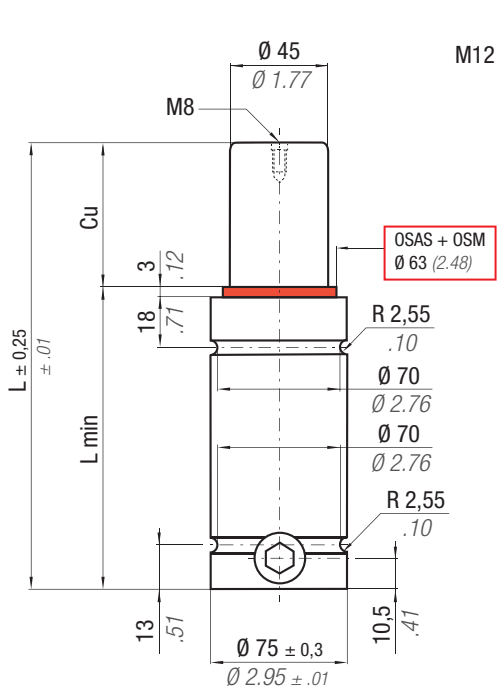

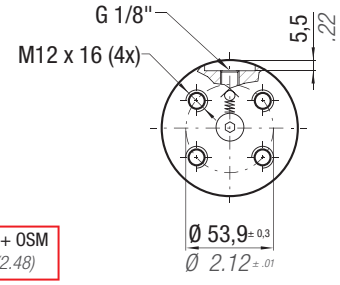

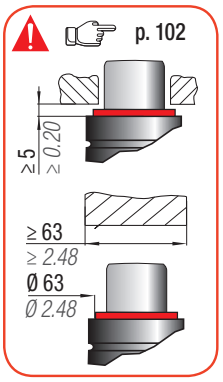

N2	°F 32 - 176	°C 0 - 80	ΔP ± 0,33 %/°C	P max 150 bar 2175 psi	P min 20 bar 290 psi	S 15,90 cm² 2.465 in²	SPM ~ 20 - 100 (at 20°C)	Max Speed 1,8 m/s	Maintenance kit 39BMRV02400D

CODE	Cu mm	Cu inch	L mm	L inch	L min mm	L min inch	F0 Initial force daN	F0 lb	$F1_i$ * End force daN	$F1_i$ lb	$F1_p$ ** End force daN	$F1_p$ lb	V0 cm³	V0 in³	~Kg	~lb	PED 2014/68/EU
RT 2400 - 010 - A	10	0.39	79	3.11	69	2.72	2385 ± 5%	5362	3125	7026	3574	8035	78,0	4.76	1,44	3.17	✓
RT 2400 - 013 - A	13	0.51	85	3.35	72	2.83			3249	7305	3763	8460	90,0	5.49	1,64	3.62	✓
RT 2400 - 016 - A	16	0.63	91	3.58	75	2.95			3350	7532	3920	8813	103,0	6.28	1,74	3.84	✓
RT 2400 - 019 - A	19	0.75	97	3.82	78	3.07			3434	7721	4051	9107	115,0	7.02	1,78	3.92	✓
RT 2400 - 025 - A	25	0.98	109	4.29	84	3.31			3566	8016	4258	9572	139,0	8.48	1,88	4.14	✓
RT 2400 - 032 - A	32	1.26	123	4.84	91	3.58			3678	8268	4436	9973	170,0	10.37	1,99	4.39	✓
RT 2400 - 038 - A	38	1.50	135	5.31	97	3.82	150 bar 2175 psi		3751	8433	4554	10238	191,0	11.65	2,08	4.59	✓
RT 2400 - 050 - A	50	1.97	159	6.26	109	4.29			3858	8672	4726	10624	239,0	14.58	2,27	5.00	✓
RT 2400 - 063 - A	63	2.48	185	7.28	122	4.80			3937	8850	4855	10914	292,0	17.81	2,48	5.47	✓
RT 2400 - 075 - A	75	2.95	209	8.23	134	5.28	+ 20 °C +68 °F		3989	8969	4942	11110	340,0	20.74	2,67	5.89	✓
RT 2400 - 080 - A	80	3.15	219	8.62	139	5.47			4008	9010	4972	11178	360,0	21.96	2,74	6.04	✓
RT 2400 - 100 - A	100	3.94	259	10.20	159	6.26			4065	9138	5066	11389	441,0	26.90	3,06	6.75	✓
RT 2400 - 125 - A	125	4.92	309	12.17	184	7.24			4113	9247	5147	11571	541,0	33.00	3,45	7.61	✓

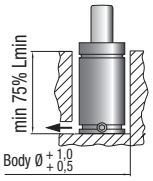

Drop-in

Bottom mount FBF 75

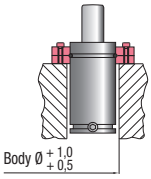

FC 75 A FCQC 75

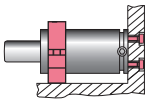

FSA 75 FSD 75 - FSE 75

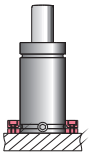

FS1 75

HOW TO ORDER p. 103

INSTALLATION GUIDELINE p. 203

K 32 R (Nissan)	E24.54.815.G (PSA)	EM24.54.700 (Renault)
SMS DNH 3203n Rev.3 (TOYOTA)		

RT 4200

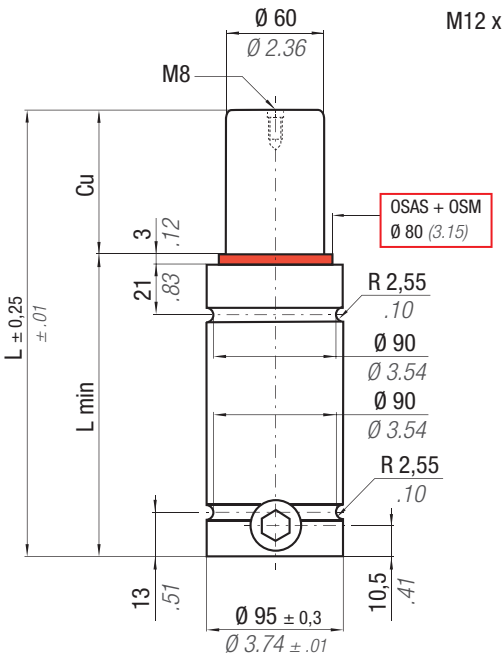

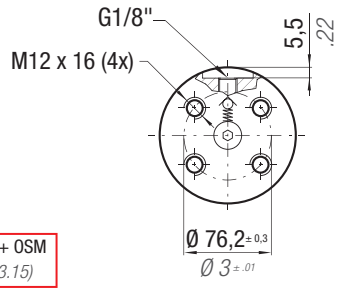

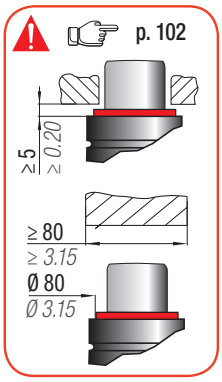

OSAS + OSM = OVER STROKE ACTIVE SAFETY + OVER STROKE MARKER

SW

easy MANIFOLD p. 241

ACTIVE SAFETY

OSAS

USAS

OPAS

* $F1_i$ = Isothermal end force at 100% Cu p. 18

** $F1_p$ = Polytrophic end force at 100% Cu

RT

N_2	°F 32 - 176	°C 0 - 80	ΔP	P max	P min	S	SPM	Max Speed	Maintenance kit
			± 0,33 %/°C	150 bar / 2175 psi	20 bar / 290 psi	28,27 cm² / 4.382 in²	~ 20 - 100 (at 20°C)	1,8 m/s	39BMRV04200C

CODE	Cu mm	Cu inch	L mm	L inch	L min mm	L min inch	F0 Initial force daN	F0 lb	$F1_i$ * End force daN	$F1_i$ lb	$F1_p$ ** End force daN	$F1_p$ lb	V0 cm³	V0 in³	~Kg	~lb	PED 2014/68/EU
RT 4200 - 016 - A	16	0.63	94	3.70	78	3.07	4240 ± 5%	9532	6073	13653	7150	16074	174,0	10.61	2,97	6.55	✓
RT 4200 - 019 - A	19	0.75	100	3.94	81	3.19			6238	14024	7409	16656	194,0	11.83	3,05	6.72	✓
RT 4200 - 025 - A	25	0.98	112	4.41	87	3.43			6499	14609	7823	17587	235,0	14.34	3,20	7.05	✓
RT 4200 - 032 - A	32	1.26	126	4.96	94	3.70			6723	15113	8183	18396	282,0	17.20	3,37	7.43	✓
RT 4200 - 038 - A	38	1.50	138	5.43	100	3.94			6870	15443	8421	18931	323,0	19.70	3,52	7.76	✓
RT 4200 - 050 - A	50	1.97	162	6.38	112	4.41	150 bar / 2175 psi		7085	15928	8774	19725	404,0	24.64	3,82	8.42	✓
RT 4200 - 063 - A	63	2.48	188	7.40	125	4.92			7246	16289	9039	20320	492,0	30.01	4,14	9.13	✓
RT 4200 - 075 - A	75	2.95	212	8.35	137	5.39	+ 20 °C +68 °F		7354	16533	9219	20725	573,0	34.95	4,44	9.79	✓
RT 4200 - 080 - A	80	3.15	222	8.74	142	5.59			7391	16616	9281	20865	606,0	36.97	4,57	10.08	✓
RT 4200 - 100 - A	100	3.94	262	10.31	162	6.38			7509	16880	9477	21305	742,0	45.26	5,07	11.18	✓
RT 4200 - 125 - A	125	4.92	312	12.28	187	7.36			7609	17105	9645	21683	911,0	55.57	5,69	12.54	✓

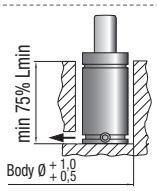

Drop-in

Bottom mount

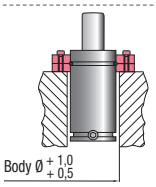

FC 95 A
FCQC 95

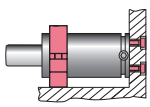

FSA 95
FSD 95 - FSE 95

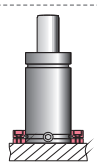

FS1 95

HOW TO ORDER p. 103

INSTALLATION GUIDELINE p. 203

SW

OSAS + OSM = OVER STROKE ACTIVE SAFETY + OVER STROKE MARKER

ACTIVE SAFETY

easy MANIFOLD p. 241

OSAS

USAS

OPAS

* $F1_i$ = Isothermal end force at 100% Cu p. 18

** $F1_p$ = Polytrophic end force at 100% Cu

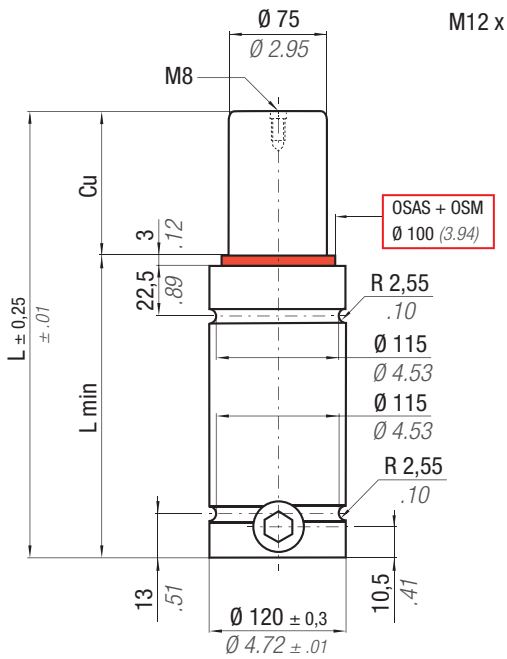

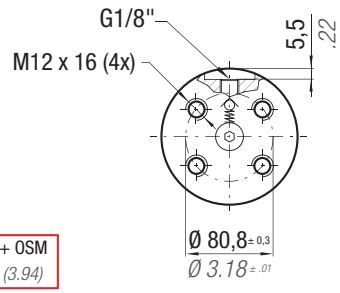

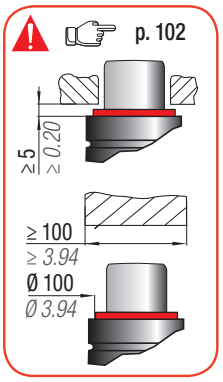

N2	°F 32 - 176	°C 0 - 80	ΔP	P max	P min	S	SPM	Max Speed	Maintenance kit
			± 0,33 %/°C	150 bar *2175 psi*	20 bar *290 psi*	44,18 cm² *6.848 in²*	~ 20 - 100 (at 20°C)	1,8 m/s	39BMRV06600C

CODE	Cu mm	Cu inch	L mm	L inch	L min mm	L min inch	Fo Initial force daN	Fo lb	$F1_i$ * End force daN	$F1_i$ lb	$F1_p$ ** End force daN	$F1_p$ lb	Vo cm³	Vo in³	~Kg	~lb	PED 2014/68/EU
RT 6600 - 016 - A	16	0.63	104	4.09	88	3.46	6630 ± 5%	14904	9032	20306	10464	23524	309,0	18.85	5,41	11.93	✓
RT 6600 - 019 - A	19	0.75	110	4.33	91	3.58			9281	20864	10847	24385	341,0	20.80	5,53	12.19	✓
RT 6600 - 025 - A	25	0.98	122	4.80	97	3.82			9684	21771	11478	25804	405,0	24.71	5,77	12.72	✓
RT 6600 - 032 - A	32	1.26	136	5.35	104	4.09			10044	22579	12047	27083	479,0	29.22	6,05	13.34	✓
RT 6600 - 038 - A	38	1.50	148	5.83	110	4.33			10286	23124	12435	27955	544,0	33.18	6,25	13.78	✓
RT 6600 - 050 - A	50	1.97	172	6.77	122	4.80	150 bar *2175 psi*		10652	23946	13025	29281	672,0	40.99	6,77	14.93	✓
RT 6600 - 063 - A	63	2.48	198	7.80	135	5.31			10932	24577	13483	30311	811,0	49.47	7,25	15.98	✓
RT 6600 - 075 - A	75	2.95	222	8.74	147	5.79			11125	25011	13800	31024	939,0	57.28	7,77	17.13	✓
RT 6600 - 080 - A	80	3.15	232	9.13	152	5.98	+ 20 °C *+68 °F*		11193	25162	13910	31271	992,0	60.51	7,97	17.57	✓
RT 6600 - 100 - A	100	3.94	272	10.71	172	6.77			11407	25643	14264	32067	1206,0	73.57	8,76	19.31	✓
RT 6600 - 125 - A	125	4.92	322	12.68	197	7.76			11593	26061	14574	32764	1473,0	89.85	9,76	21.52	✓

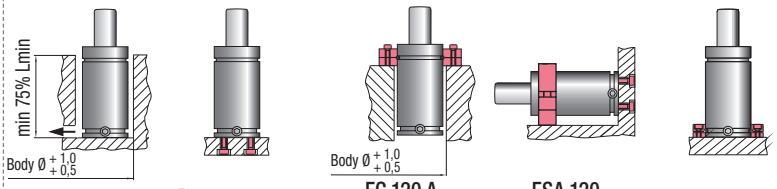

Drop-in | Bottom mount | FC 120 A FCQC 120 | FSA 120 FSD 120 | FS1 120

HOW TO ORDER p. 103

INSTALLATION GUIDELINE p. 203

RT 9500

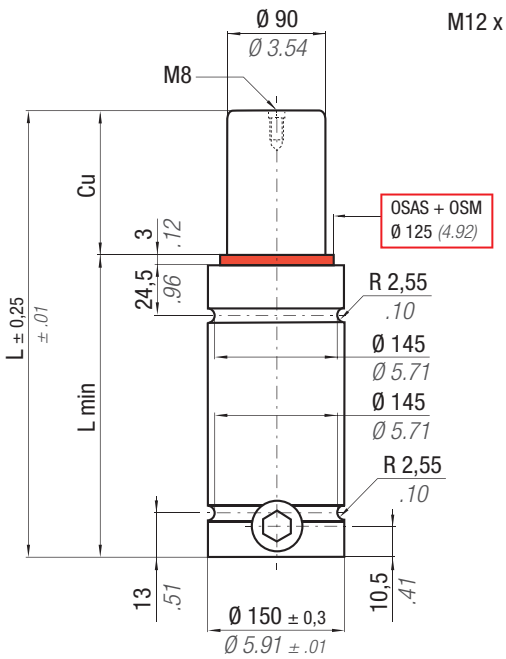

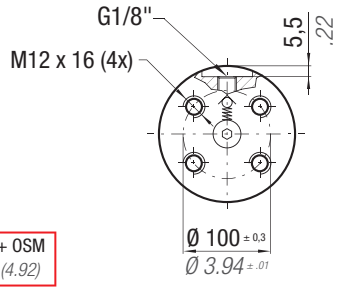

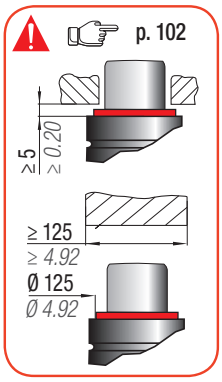

OSAS + OSM = OVER STROKE ACTIVE SAFETY + OVER STROKE MARKER

SW

easy MANIFOLD p. 241

ACTIVE SAFETY

OSAS

USAS

OPAS

* $F1_i$ = Isothermal end force at 100% Cu p. 18

** $F1_p$ = Polytrophic end force at 100% Cu

RT

N2	°F 32 - 176	°C 0 - 80	ΔP	P max	P min	S	SPM	Max Speed	Maintenance kit
			± 0,33 %/°C	150 bar / 2175 psi	20 bar / 290 psi	63,62 cm² / 9.864 in²	~ 20 - 100 (at 20°C)	1,8 m/s	39BMRV09500C

CODE	Cu mm	Cu inch	L mm	L inch	L min mm	L min inch	F0 Initial force daN	F0 lb	$F1_i$ * End force daN	$F1_i$ lb	$F1_p$ ** End force daN	$F1_p$ lb	V0 cm³	V0 in³	~Kg	~lb	PED 2014/68/EU
RT 9500 - 019 - A	19	0.75	116	4.57	97	3.82			13206	29688	15375	34564	506,0	30.87	9,58	21.12	✓
RT 9500 - 025 - A	25	0.98	128	5.04	103	4.06			13741	30892	16208	36437	603,0	36.78	9,95	21.94	✓
RT 9500 - 032 - A	32	1.26	142	5.59	110	4.33	9540	21446	14214	31954	16952	38110	716,0	43.68	10,39	22.91	✓
RT 9500 - 038 - A	38	1.50	154	6.06	116	4.57	± 5%		14530	32665	17455	39240	812,0	49.53	10,76	23.72	✓
RT 9500 - 050 - A	50	1.97	178	7.01	128	5.04			15003	33729	18214	40947	1006,0	61.37	11,51	25.38	✓
RT 9500 - 063 - A	63	2.48	204	8.03	141	5.55	150 bar	2175 psi	15364	34539	18797	42257	1215,0	74.12	12,32	27.16	✓
RT 9500 - 075 - A	75	2.95	228	8.98	153	6.02			15610	35093	19198	43159	1409,0	85.95	13,07	28.81	✓
RT 9500 - 080 - A	80	3.15	238	9.37	158	6.22	+ 20 °C	+68 °F	15696	35285	19338	43474	1489,0	90.83	13,38	29.50	✓
RT 9500 - 100 - A	100	3.94	278	10.94	178	7.01			15967	35895	19783	44474	1812,0	110.53	14,63	32.25	✓
RT 9500 - 125 - A	125	4.92	328	12.91	203	7.99			16202	36423	20170	45344	2215,0	135.12	16,19	35.69	✓

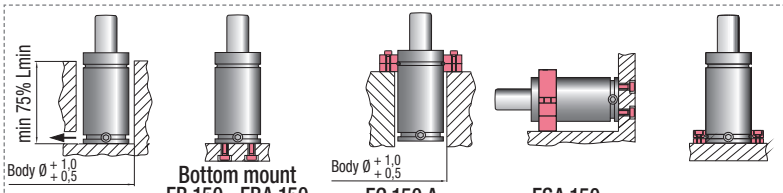

HOW TO ORDER p. 103

INSTALLATION GUIDELINE p. 203

MB	Renault	Suzuki

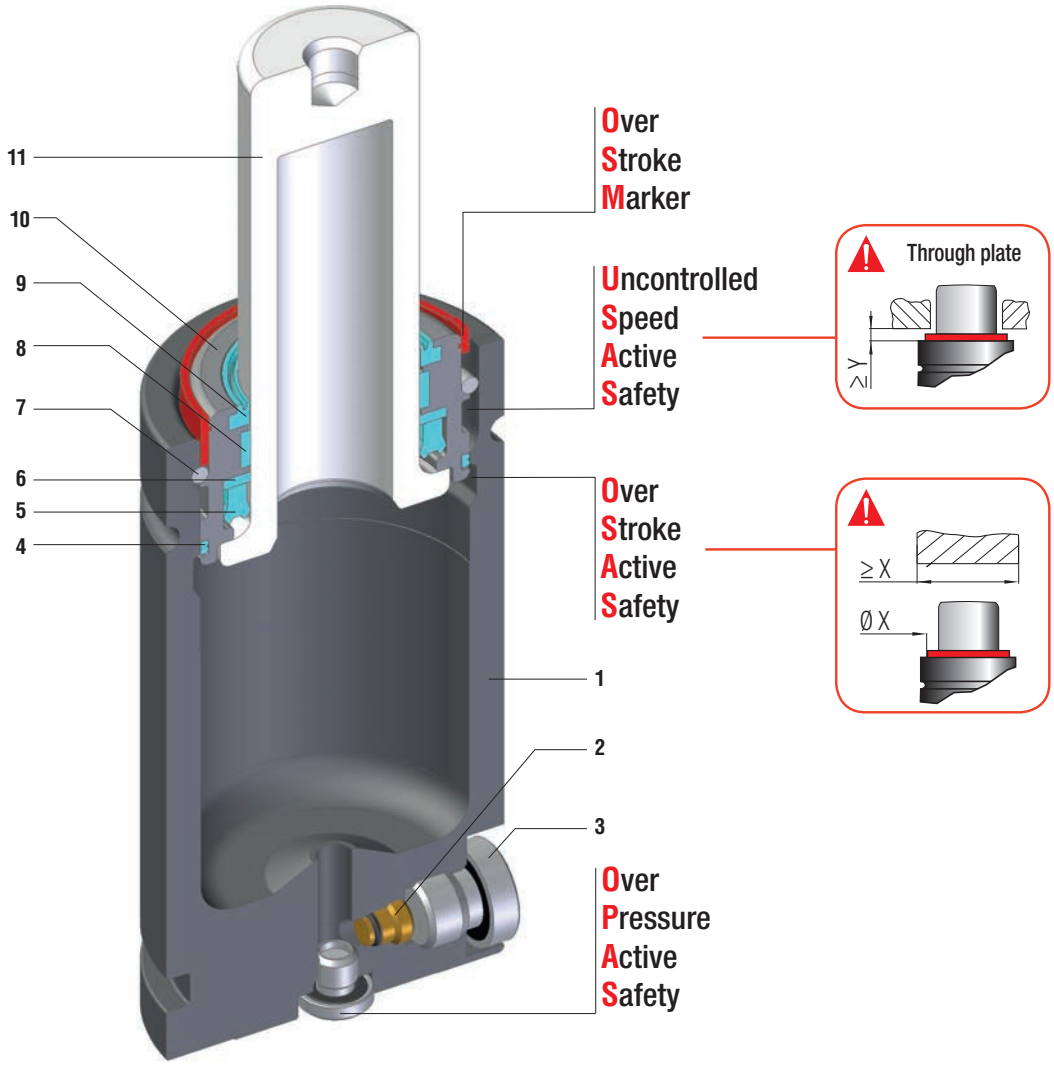

Forze ISO, altezza ridotta - ISO forces, reduced height - ISO Kräfte, Reduzierte Höhe
Forces ISO, Hauteur réduite - ISO fuerzas, altura reducida - Forças ISO, altura reduzida

SEALING	ROD SEAL
DESIGN	BUSH - BODY DESIGN

1	Body	**5**	Rod seal	**9**	Rod wiper
2	Valve	**6**	Back-up ring	**10**	Bush
3	Plug	**7**	Retaining ring	**11**	Rod (nitrited superfinished)
4	Dual ring seal	**8**	Guide ring		

RANGE CHART

Model	Body Ø		Stroke Cu		Initial force F0		OSAS	USAS	OPAS	SKUDO	SW
	mm	*inch*	mm	*inch*	daN	*lb*					
S 500	45	*1.77*	6 - 125	*0.24 - 4.92*	470	*1057*	-	-	-	-	-
S 750	50	*1.97*	6 - 125	*0.24 - 4.92*	740	*1664*	✓	✓	✓	-	✓
S 1500	75	*2.95*	25 - 100	*0.98 - 3.94*	1530	*3440*	-	-	✓	-	-
S 3000	95	*3.74*	25 - 100	*0.98 - 3.94*	2945	*6621*	-	-	✓	-	-

✓ Built-in as standard ✓ Optional upon request

HOW TO ORDER

S

Series — Revision code

Model

S 750-050-B-N-W

Stroke — Version

Available versions

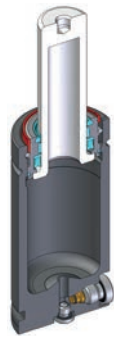

S 750-050-B

Standard code

Self contained

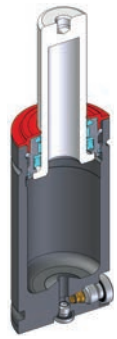

S 750-050-B-W

Add "-W" to standard code

Self contained

+

Secondary wiper

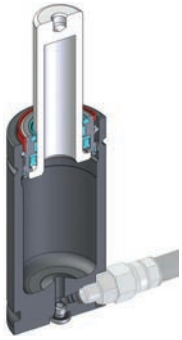

S 750-050-B-N

Add "-N" to standard code

Linkable

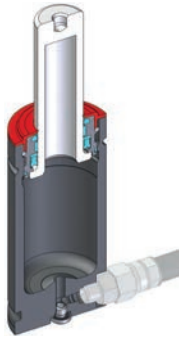

S 750-050-B-N-W

Add "-N-W" to standard code

Linkable

+

Secondary wiper

S 1500-050-A-E

Add "-E" to standard code

Easy Manifold

Only for S 1500 and S 3000

EM24.54.700 (Renault)	SES-K 5404e (Suzuki)		

SPECIAL SPRINGS

ACTIVE SAFETY

*** $F1_i$ =**
Isothermal end force at 100% Cu p. 18

**** $F1_p$ =**
Polytrophic end force at 100% Cu

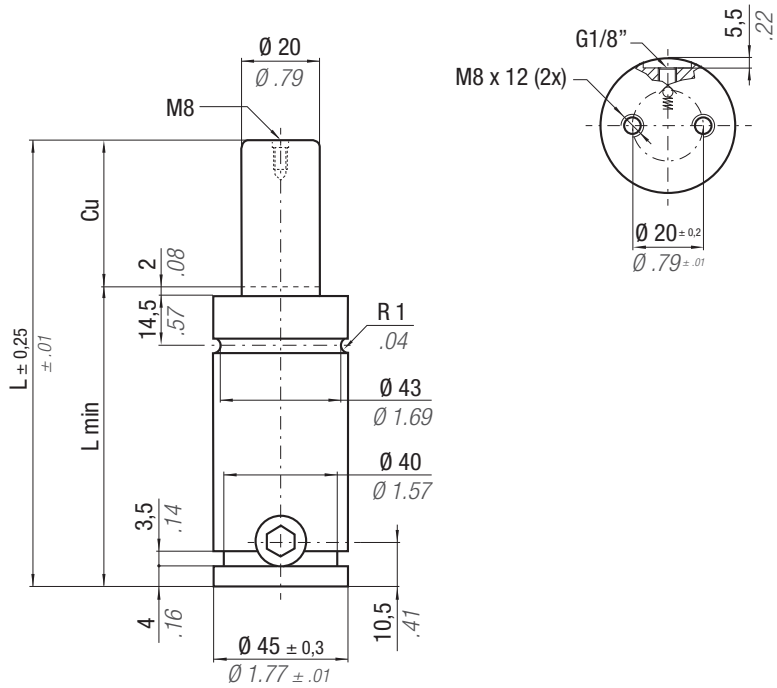

N2	°F 32 - 176	°C 0 - 80	ΔP	P max	P min	S	SPM	Max Speed	Maintenance kit
			± 0,33 %/°C	150 bar *2175 psi*	20 bar *290 psi*	3,14 cm² *0.487 in²*	~ 40 - 100 (at 20°C)	1,8 m/s	39BMS00500A

CODE	Cu mm	Cu inch	L mm	L inch	L min mm	L min inch	Fo Initial force daN	Fo lb	$F1_i$ * End force daN	$F1_i$ lb	$F1_p$ ** End force daN	$F1_p$ lb	Vo cm³	Vo in³	~Kg	~lb	PED 2014/68/EU
S 500 - 006 - A	6	0.24	62	2.44	56	2.20	470 ± 5%	1057	579	1301	648	1457	12,0	0.73	0,54	1.19	✓
S 500 - 013 - A	13	0.51	76	2.99	63	2.48			622	1399	714	1604	20,0	1.22	0,58	1.28	✓
S 500 - 019 - A	19	0.75	88	3.46	69	2.72			645	1451	749	1683	26,0	1.59	0,62	1.37	✓
S 500 - 025 - A	25	0.98	100	3.94	75	2.95			660	1485	772	1736	32,0	1.95	0,67	1.48	✓
S 500 - 038 - A	38	1.50	126	4.96	88	3.46			680	1528	802	1804	45,0	2.75	0,77	1.70	✓
S 500 - 050 - A	50	1.97	150	5.91	100	3.94	150 bar *2175 psi*		690	1552	819	1840	57,0	3.48	0,85	1.87	✓
S 500 - 063 - A	63	2.48	176	6.93	113	4.45			669	1505	786	1767	78,0	4.76	0,90	1.98	✓
S 500 - 080 - A	80	3.15	210	8.27	130	5.12	+ 20 °C *+68 °F*		678	1524	799	1797	96,0	5.86	1,01	2.23	✓
S 500 - 100 - A	100	3.94	250	9.84	150	5.91			687	1544	813	1828	116,0	7.08	1,16	2.56	✓
S 500 - 125 - A	125	4.92	300	11.81	175	6.89			694	1561	825	1855	141,0	8.60	1,35	2.98	✓

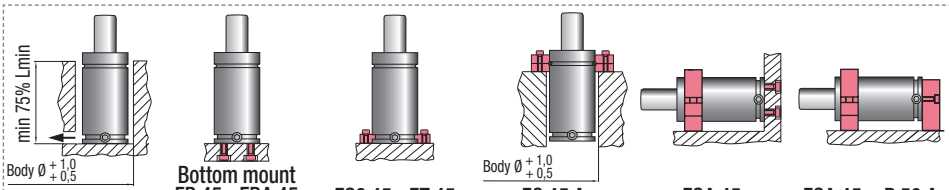

Drop-in | Bottom mount FB 45 - FBA 45 FBB 45 - FBD 45 | FS2 45 - FT 45 FS2A 45 - FTP 45 | FC 45 A FCQC 45 | FSA 45 FSD 45 | FSA 45 + R 50 A FSE 45 + R 50 A

HOW TO ORDER p. 115

INSTALLATION GUIDELINE p. 203

B8 3180 220 000 003(MB)	EM24.54.700 (Renault)	SES-K 5404e (Suzuki)	

S 750

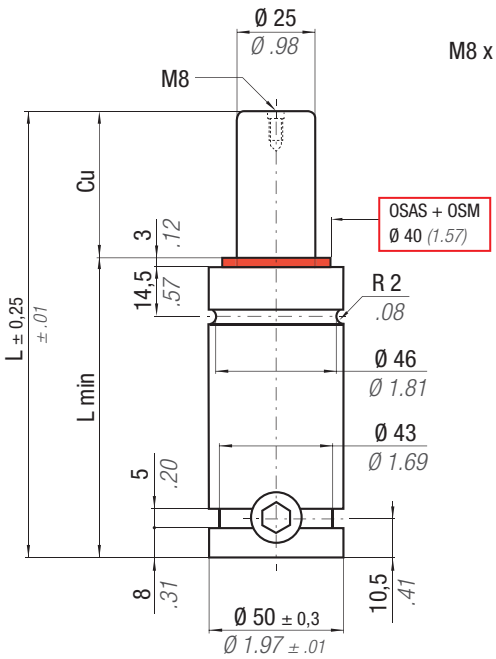

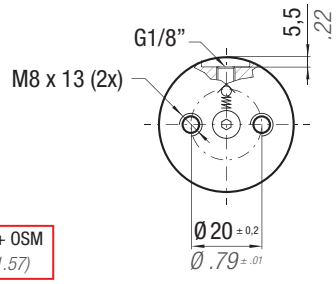

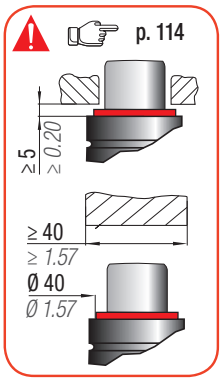

OSAS + OSM = OVER STROKE ACTIVE SAFETY + OVER STROKE MARKER

SW

ACTIVE SAFETY

OSAS

USAS

OPAS

* $F1_i$ = Isothermal end force at 100% Cu p. 18

** $F1_p$ = Polytrophic end force at 100% Cu

N_2	°F 32 - 176	°C 0 - 80	ΔP	P max	P min	S	SPM	Max Speed	Maintenance kit
			± 0,33 %/°C	150 bar *2175 psi*	20 bar *290 psi*	4,91 cm² *0.761 in²*	~ 30 - 80 (at 20°C)	1,8 m/s	39BMS00750B

CODE PHASING OUT from 01/2018	NEW	Cu mm	Cu inch	L mm	L inch	L min mm	L min inch	F0 Initial force daN	F0 lb	$F1_i$ End force * daN	$F1_i$ lb	$F1_p$ End force ** daN	$F1_p$ lb	V0 cm³	V0 in³	~Kg	~lb	PED 2014/68/EU
S 750 - 006 - A	S 750 - 006 - B	6	0.24	62	2.44	56	2.20	740 ± 5%	1664	909	2044	1019	2291	18,0	1.10	0,60	1.32	✓
S 750 - 013 - A	S 750 - 013 - B	13	0.51	76	2.99	63	2.48			995	2237	1149	2583	29,0	1.77	0,66	1.46	✓
S 750 - 019 - A	S 750 - 019 - B	19	0.75	88	3.46	69	2.72			1035	2327	1212	2725	38,0	2.32	0,71	1.57	✓
S 750 - 025 - A	S 750 - 025 - B	25	0.98	100	3.94	75	2.95			1062	2387	1253	2817	46,0	2.81	0,75	1.65	✓
S 750 - 038 - A	S 750 - 038 - B	38	1.50	126	4.96	88	3.46			1096	2464	1307	2938	66,0	4.03	0,85	1.87	✓
S 750 - 050 - A	S 750 - 050 - B	50	1.97	150	5.91	100	3.94	150 bar *2175 psi*		1114	2504	1336	3003	84,0	5.12	0,95	2.09	✓
S 750 - 063 - A	S 750 - 063 - B	63	2.48	176	6.93	113	4.45			1128	2536	1357	3051	103,0	6.28	1,05	2.31	✓
S 750 - 080 - A	S 750 - 080 - B	80	3.15	210	8.27	130	5.12	+ 20 °C	+68 °F	1139	2561	1375	3091	128,0	7.81	1,18	2.60	✓
S 750 - 100 - A	S 750 - 100 - B	100	3.94	250	9.84	150	5.91			1148	2581	1390	3125	158,0	9.64	1,33	2.93	✓
S 750 - 125 - A	S 750 - 125 - B	125	4.92	300	11.81	175	6.89			1155	2597	1401	3150	195,0	11.90	1,52	3.35	✓

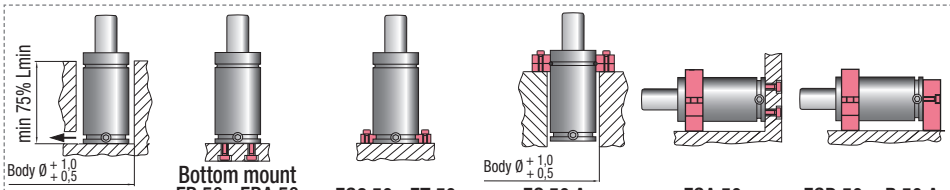

HOW TO ORDER p. 115

INSTALLATION GUIDELINE p. 203

EM24.54.700 (Renault)			

SPECIAL SPRINGS

easy MANIFOLD p. 241

ACTIVE SAFETY

* $F1_i$ = Isothermal end force at 100% Cu p. 18

** $F1_p$ = Polytrophic end force at 100% Cu

OPAS

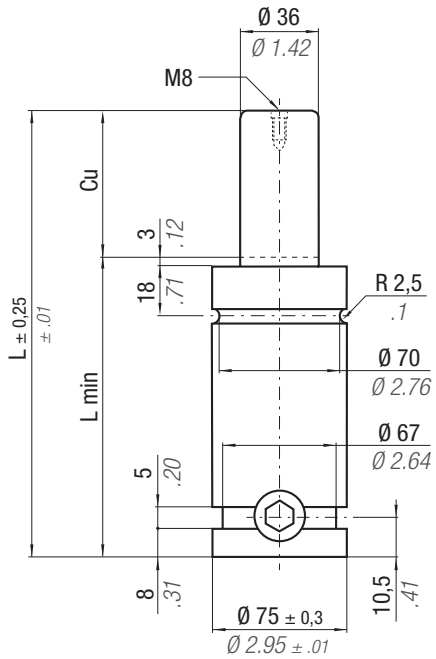

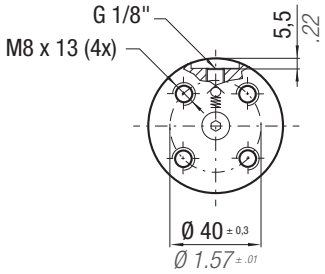

N2	°F 32 - 176	°C 0 - 80	ΔP	P max	P min	S	SPM	Max Speed	Maintenance kit
			± 0,33 %/°C	150 bar *2175 psi*	20 bar *290 psi*	10,18 cm² *1.578 in²*	~ 20 - 80 (at 20°C)	1,8 m/s	39BMS01500A

CODE	Cu		L		L min		Fo Initial force		$F1_i$ * End force		$F1_p$ ** End force		Vo				PED 2014/68/EU
	mm	*inch*	mm	*inch*	mm	*inch*	daN	*lb*	daN	*lb*	daN	*lb*	cm³	*in³*	~Kg	*~lb*	
S 1500 - 025 - A	25	*0.98*	110	*4.33*	85	*3.35*	1530 ± 5%	*3440*	2235	*5026*	2651	*5960*	93,0	*5.67*	2,25	*4.96*	✓
S 1500 - 038 - A	38	*1.50*	136	*5.35*	98	*3.86*			2328	*5234*	2798	*6290*	130,0	*7.93*	2,53	*5.58*	✓
S 1500 - 050 - A	50	*1.97*	160	*6.30*	110	*4.33*	150 bar *2175 psi*		2380	*5349*	2880	*6476*	164,0	*10.00*	2,78	*6.13*	✓
S 1500 - 063 - A	63	*2.48*	186	*7.32*	123	*4.84*			2417	*5433*	2941	*6611*	200,0	*12.20*	3,06	*6.75*	✓
S 1500 - 080 - A	80	*3.15*	220	*8.66*	140	*5.51*			2450	*5508*	2994	*6731*	248,0	*15.13*	3,42	*7.54*	✓
S 1500 - 100 - A	100	*3.94*	260	*10.24*	160	*6.30*	+ 20 °C *+68 °F*		2476	*5566*	3036	*6826*	305,0	*18.61*	3,84	*8.47*	✓

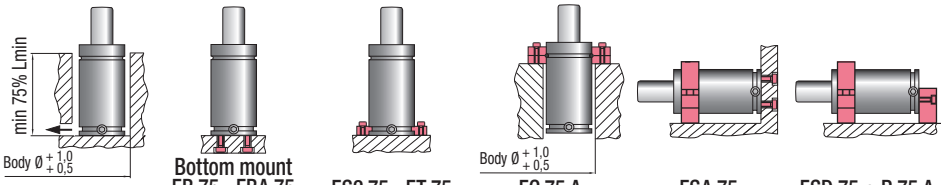

HOW TO ORDER p. 115

INSTALLATION GUIDELINE p. 203

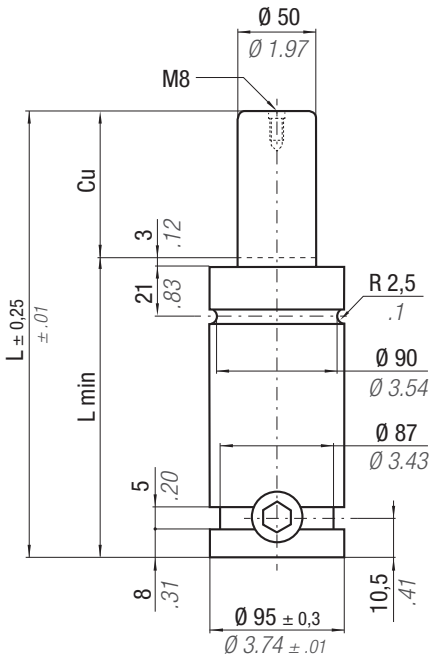

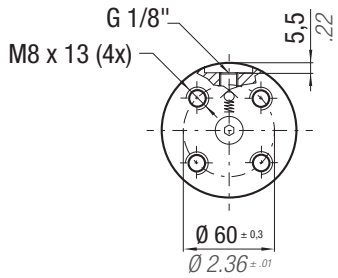

easy MANIFOLD p. 241

* $F1_i$ = Isothermal end force at 100% Cu p. 18

** $F1_p$ = Polytrophic end force at 100% Cu

ACTIVE SAFETY

OPAS

N_2	°F 32 - 176	°C 0 ~ 80	ΔP	P max	P min	S	SPM	Max Speed	Maintenance kit
			± 0,33 %/°C	150 bar *2175 psi*	20 bar *290 psi*	19,63 cm² *3.043 in²*	~ 15 - 60 (at 20°C)	1,8 m/s	39BMS03000A

CODE	Cu mm	Cu inch	L mm	L inch	L min mm	L min inch	F0 Initial force daN	F0 lb	$F1_i$ * End force daN	$F1_i$ lb	$F1_p$ ** End force daN	$F1_p$ lb	V0 cm³	V0 in³	~Kg	~lb	PED 2014/68/EU
S 3000 - 025 - A	25	0.98	120	4.72	95	3.74	2945 ± 5%	6621	4860	10927	5995	13477	143,0	8.72	4,13	9.11	✓
S 3000 - 038 - A	38	1.50	146	5.75	108	4.25			5101	11467	6391	14368	202,0	12.32	4,61	10.16	✓
S 3000 - 050 - A	50	1.97	170	6.69	120	4.72	150 bar *2175 psi*		5233	11764	6612	14865	256,0	15.62	5,04	11.11	✓
S 3000 - 063 - A	63	2.48	196	7.72	133	5.24			5328	11979	6773	15227	315,0	19.22	5,51	12.15	✓
S 3000 - 080 - A	80	3.15	230	9.06	150	5.91			5413	12168	6916	15547	392,0	23.91	6,13	13.51	✓
S 3000 - 100 - A	100	3.94	270	10.63	170	6.69	+ 20 °C	+68 °F	5479	12317	7028	15800	483,0	29.46	6,86	15.12	✓

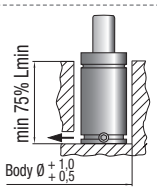

Drop-in

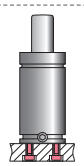

Bottom mount
FB 95 - FBA 95
FBB 95

FS2 95 - FT 95
FS2A 95 - FTP 95

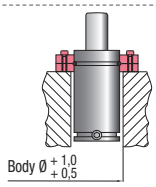

FC 95 A
FCQC 95

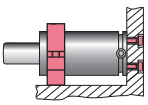

FSA 95
FSD 95 - FSE 95

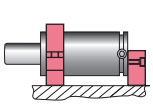

FSD 95 + R 95 A
FSE 95 + R 95 A

HOW TO ORDER p. 115

INSTALLATION GUIDELINE p. 203

SC SERIES

ISO	VDI	BMW
FCA	Ford	Mazda
MB	Nissan	PSA
Renault	Suzuki	VW

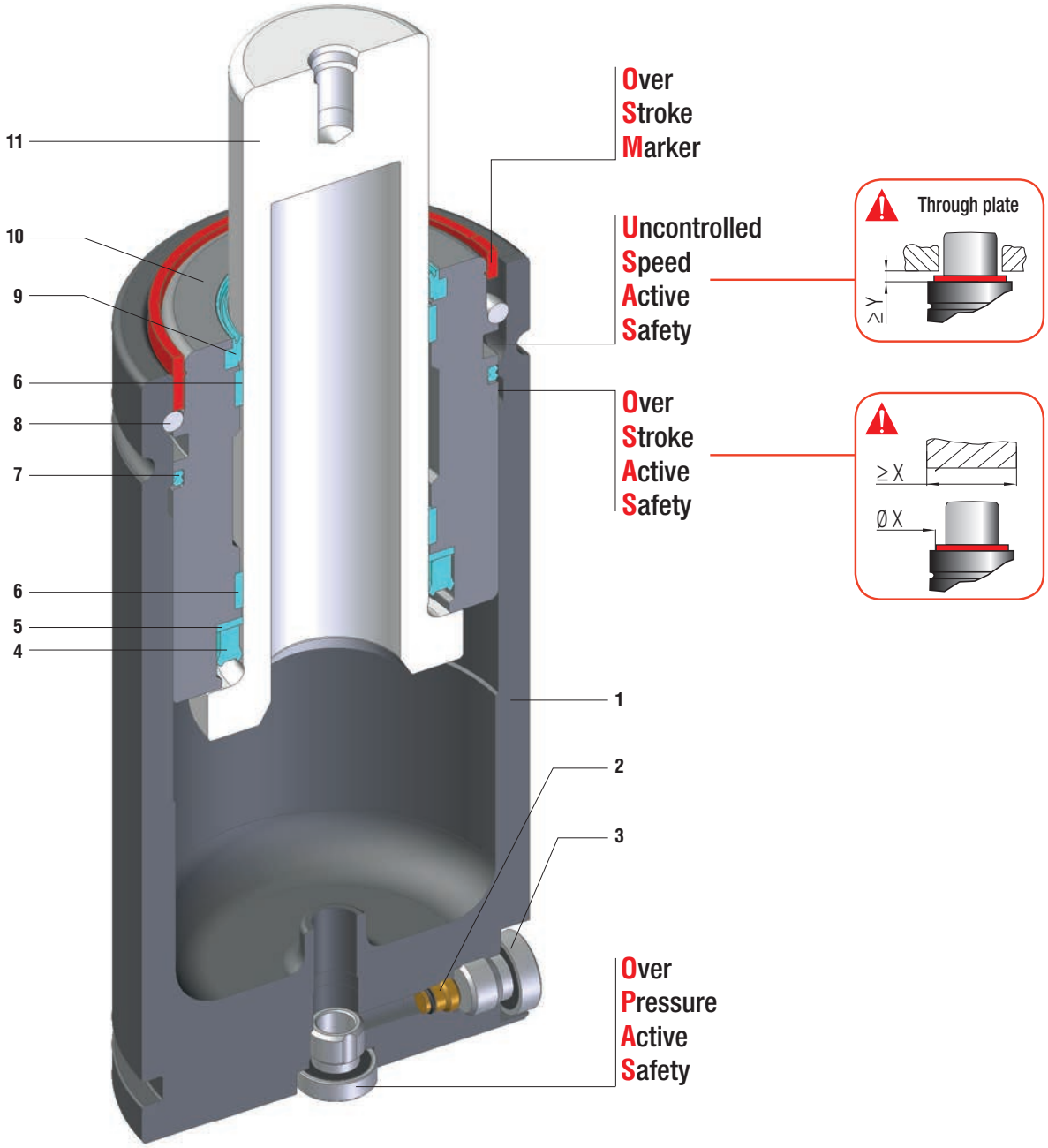

ISO 11901 standard - ISO 11901 standard - ISO 11901 standard
Conforme ISO 11901 - ISO 11901 standard - Norma ISO 11901

SEALING	ROD SEAL
DESIGN	BUSH - BODY DESIGN

1	Body	**5**	Back-up ring	**9**	Rod wiper
2	Valve	**6**	Guide ring	**10**	Bush
3	Plug	**7**	Dual ring seal	**11**	Rod (nitrited superfinished)
4	Rod seal	**8**	Retaining ring		

RANGE CHART

Model	Body Ø		Stroke Cu		Initial force F0		OSAS	USAS	OPAS	SKUDO	SW
	mm	*inch*	mm	*inch*	daN	*lb*					
SC 150	32	*1.26*	10 - 125	*0.39 - 4.92*	170	*382*	✓	✓	✓	-	✓
SC 250	38	*1.50*	10 - 125	*0.39 - 4.92*	260	*585*	✓	✓	✓	-	✓
SCF 250	M 38 X 1,5		10 - 125	*0.39 - 4.92*	260	*585*	✓	✓	✓	-	✓
SC 500	45	*1.77*	10 - 200	*0.39 - 6.30*	470	*1057*	✓	✓	✓	-	✓
SC 750	50	*1.97*	13 - 300	*0.51 - 11.81*	740	*1664*	✓	✓	✓	-	✓
SC 1500	75	*2.95*	13 - 300	*0.51 - 11.81*	1530	*3440*	✓	✓	✓	-	✓
SC 3000	95	*3.74*	13 - 300	*0.51- 11.81*	2945	*6621*	✓	✓	✓	-	✓
SC 5000	120	*4.72*	25 - 300	*0.98 - 11.81*	4980	*11195*	✓	✓	✓	-	✓
SC 7500	150	*5.91*	25 - 300	*0.98 - 11.81*	7540	*16950*	✓	✓	✓	-	✓
SC 10000	195	*7.68*	25 - 300	*0.98 - 11.81*	10600	*23830*	✓	✓	✓	-	✓

✓ Built-in as standard ✓ Optional upon request

HOW TO ORDER

SC
SCF

Series — Revision code

Model

SC 1500-050-D-E-W

Stroke — Version

Available versions

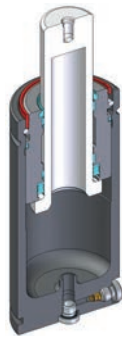

SC 1500-050-D

Standard code

Self contained

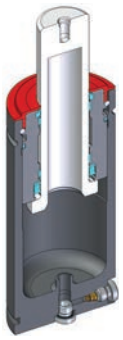

SC 1500-050-D-W

Add "-W" to standard code

Self contained

+

Secondary wiper

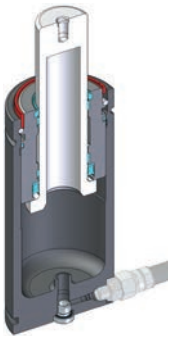

SC 1500-050-D-N

Add "-N" to standard code

Linkable

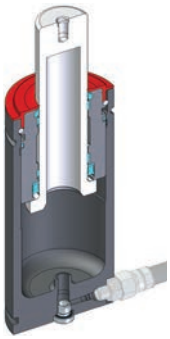

SC 1500-050-D-N-W

Add "-N-W" to standard code

Linkable

+

Secondary wiper

SC 1500-050-D-E

Add "-E" to standard code

Easy Manifold

SC 1500-050-D-E-W

Add "-E-W" to standard code

Easy Manifold

+

Secondary wiper

SC 150

ISO 11901 - 1	VDI 3003	075.90.55 (FCA)	B2 4006 (BMW)
B8 3180 220 000 001(MB)	E24.54.815.G (PSA)	EM24.54.700 (Renault)	39D 878 (VW)

SPECIAL SPRINGS

SW

OSAS + OSM = OVER STROKE ACTIVE SAFETY + OVER STROKE MARKER

ACTIVE SAFETY

easy MANIFOLD p. 241

OSAS

USAS

OPAS

* $F1_i$ = Isothermal end force at 100% Cu p. 18

** $F1_p$ = Polytrophic end force at 100% Cu

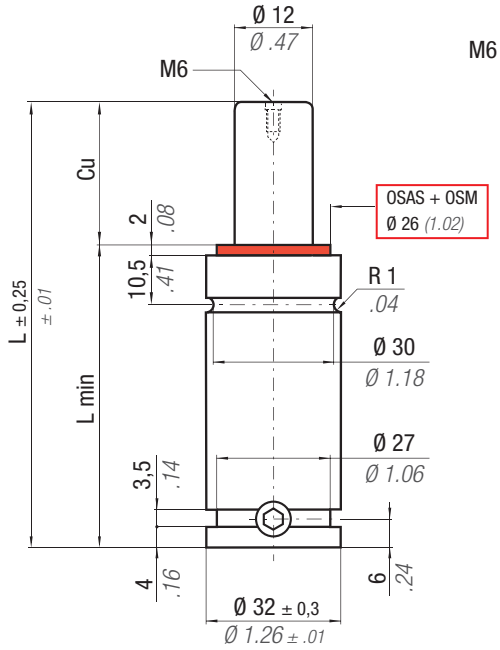

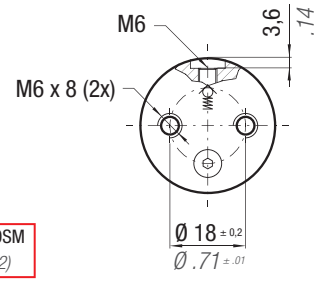

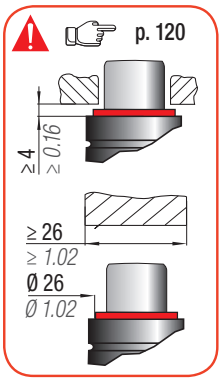

N_2	°F 32 - 176	°C 0 - 80	ΔP	P max	P min	S	SPM	Max Speed	Maintenance kit
			± 0,33 %/°C	150 bar *2175 psi*	20 bar *290 psi*	1,13 cm² *0.175 in²*	~ 80 - 100 (at 20°C)	1,8 m/s	39BMSC00150E

CODE	Cu mm	Cu inch	L mm	L inch	L min mm	L min inch	Fo Initial force daN	Fo lb	$F1_i$ * End force daN	$F1_i$ lb	$F1_p$ ** End force daN	$F1_p$ lb	Vo cm³	Vo in³	~Kg	~lb	PED 2014/68/EU
SC 150 - 010 - D	10	0.39	70	2.76	60	2.36	170 ± 5%	382	191	429	207	466	12,0	0.73	0,28	0.62	✓
SC 150 - 013 - D	12,7	0.51	75,4	2.97	62,7	2.47			194	435	212	476	14,0	0.85	0,29	0.64	✓
SC 150 - 016 - D	16	0.63	82	3.23	66	2.60			197	442	216	486	16,0	0.98	0,30	0.66	✓
SC 150 - 025 - D	25	0.98	100	3.94	75	2.95			202	455	224	504	21,0	1.28	0,33	0.73	✓
SC 150 - 038 - D	38	1.50	126	4.96	88	3.46			207	465	231	519	28,0	1.71	0,36	0.79	✓
SC 150 - 050 - D	50	1.97	150	5.91	100	3.94	150 bar *2175 psi*		209	471	235	528	35,0	2.14	0,40	0.88	✓
SC 150 - 063 - D	63,5	2.48	177	6.97	113,5	4.47			211	475	238	535	43,0	2.62	0,44	0.97	✓
SC 150 - 080 - D	80	3.15	210	8.27	130	5.12	+ 20 °C *+68 °F*		213	479	240	540	52,0	3.17	0,49	1.08	✓
SC 150 - 100 - D	100	3.94	250	9.84	150	5.91			214	482	242	545	63,0	3.84	0,55	1.21	✓
SC 150 - 125 - D	125	4.92	300	11.81	175	6.89			216	485	244	549	78,0	4.76	0,64	1.41	✓

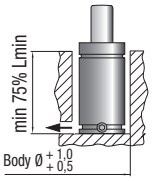

Drop-in

Bottom mount

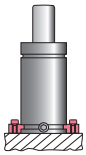

FS2A 32
FS2B 32

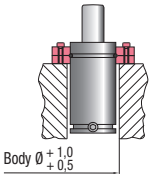

FC 32 A
FCQC 32

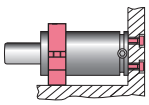

FSA 32
FSD 32

HOW TO ORDER p. 121

INSTALLATION GUIDELINE p. 203

ISO 11901 - 1	VDI 3003	B2 4006 (BMW)	075.90.55 (FCA)
B8 3180 220 000 001(MB)	K 32 S (Nissan)	E24.54.815.G (PSA)	EM24.54.700 (Renault)
SES-K 5404e (Suzuki)	39D 878 (VW)		

SC 250

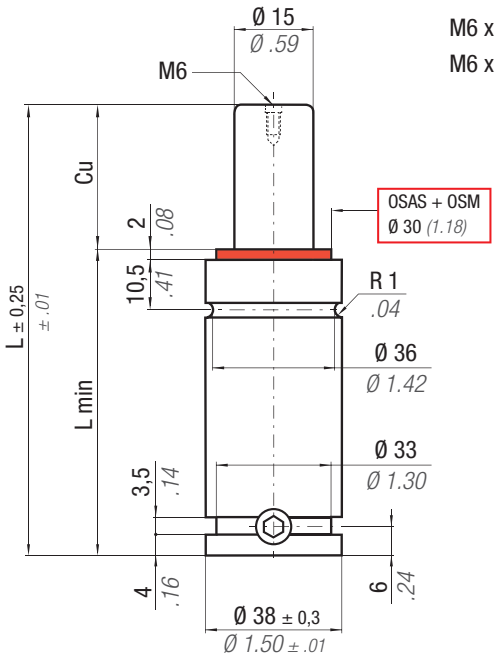

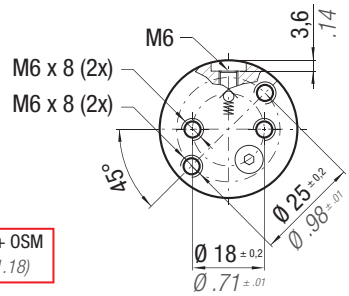

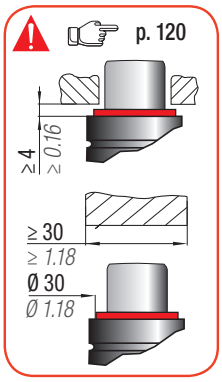

OSAS + OSM = OVER STROKE ACTIVE SAFETY + OVER STROKE MARKER

SW

easy MANIFOLD p. 241

ACTIVE SAFETY

OSAS

USAS

OPAS

* $F1_i$ = Isothermal end force at 100% Cu p. 18

** $F1_p$ = Polytrophic end force at 100% Cu

N_2	°F 32 - 176	°C 0 - 80	ΔP	P max	P min	S	SPM	Max Speed	Maintenance kit
			± 0,33 %/°C	150 bar *2175 psi*	20 bar *290 psi*	1,77 cm² *0.274 in²*	~ 80 - 100 (at 20°C)	1,8 m/s	39BMSC00250E

SC
SCF

CODE	Cu mm	Cu inch	L mm	L inch	L min mm	L min inch	F0 Initial force daN	F0 lb	$F1_i$ * End force daN	$F1_i$ lb	$F1_p$ ** End force daN	$F1_p$ lb	V0 cm³	V0 in³	~Kg	~lb	PED 2014/68/EU
SC 250 - 010 - D	10	0.39	70	2.76	60	2.36	260 ± 5% 150 bar *2175 psi* + 20 °C *+68 °F*	*585*	303	682	332	746	16,0	0.98	0,40	0.88	✓
SC 250 - 013 - D	12,7	0.50	75,4	2.97	62,7	2.47			309	695	340	765	19,0	1.16	0,41	0.90	✓
SC 250 - 016 - D	16	0.63	82	3.23	66	2.60			315	707	348	783	21,0	1.28	0,43	0.95	✓
SC 250 - 019 - D	19	0.75	88	3.46	69	2.72			319	717	354	797	23,0	1.40	0,45	0.99	✓
SC 250 - 025 - D	25	0.98	100	3.94	75	2.95			325	731	364	818	28,0	1.71	0,48	1.06	✓
SC 250 - 038 - D	38	1.50	126	4.96	88	3.46			334	751	377	848	38,0	2.32	0,54	1.19	✓
SC 250 - 050 - D	50	1.97	150	5.91	100	3.94			339	762	385	865	47,0	2.87	0,60	1.32	✓
SC 250 - 063 - D	63,5	2.50	177	6.97	113,5	4.47			343	771	391	878	58,0	3.54	0,66	1.46	✓
SC 250 - 080 - D	80	3.15	210	8.27	130	5.12			346	778	395	889	70,0	4.27	0,74	1.63	✓
SC 250 - 100 - D	100	3.94	250	9.84	150	5.91			349	784	399	898	85,0	5.19	0,81	1.79	✓
SC 250 - 125 - D	125	4.92	300	11.81	175	6.89			351	789	403	906	105,0	6.41	0,98	2.16	✓

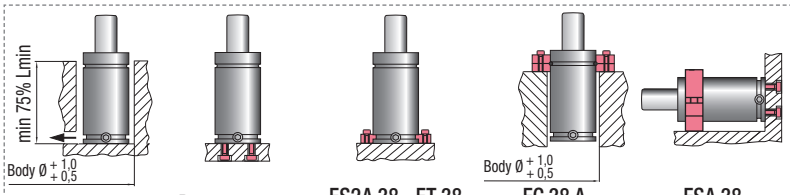

Drop-in | Bottom mount | FS2A 38 - FT 38 FS2B 38 - FTP 38 | FC 38 A FCQC 38 | FSA 38 FSD 38

HOW TO ORDER p. 121

INSTALLATION GUIDELINE p. 203

SCF 250
threaded

SPECIAL SPRINGS

SW

OSAS + OSM = OVER STROKE ACTIVE SAFETY + OVER STROKE MARKER

ACTIVE SAFETY

OSAS

USAS

OPAS

Il nuovo codice sarà fornito solo ad esaurimento del vecchio

The new code will be supplied only when the old will be out of stock

Der neue Kode wird geliefert nur wenn der alte nicht mehr im Lager ist

Le nouveau code sera fourni uniquement lorsque le vieux stock sera ecoulé

El nuevo código será suministrado sólo cuando el viejo está fuera de stock

O novo código irá ser fornecido apenas quando o antigo esgotar stock

* $F1_i$ = Isothermal end force at 100% Cu p. 18

** $F1_p$ = Polytrophic end force at 100% Cu

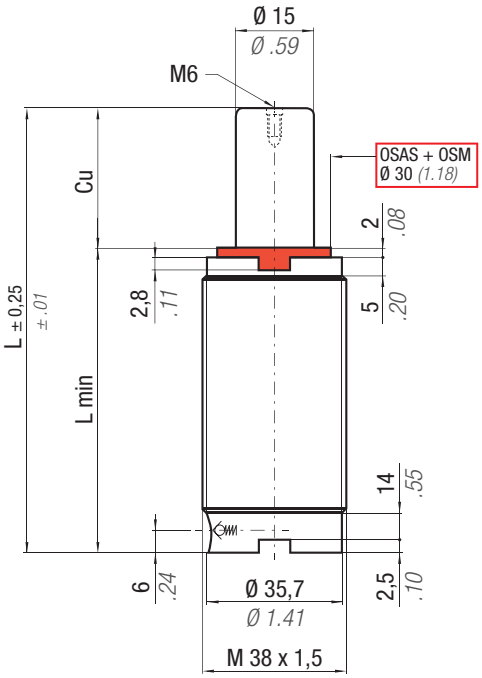

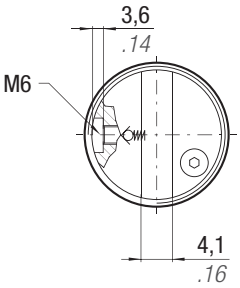

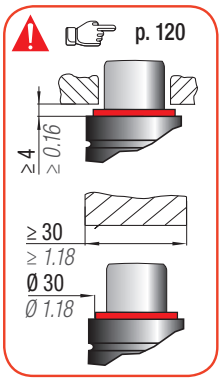

N2	°F 32 - 176 / °C 0 - 80	ΔP	P max	P min	S	SPM	Max Speed	Maintenance kit
		± 0,33 %/°C	150 bar 2175 psi	20 bar 290 psi	1,77 cm² 0.274 in²	~ 80 - 100 (at 20°C)	1,8 m/s	39BMSC00250E

CODE PHASING OUT from 09/2009	NEW	Cu mm	Cu inch	L mm	L inch	L min mm	L min inch	F0 Initial force daN	F0 lb	$F1_i$ * End force daN	$F1_i$ lb	$F1_p$ ** End force daN	$F1_p$ lb	V0 cm³	V0 in³	~Kg	~lb	PED 2014/68/EU
SCF 250 - 010 - A	SCF 250 - 010 - D	10	0.39	70	2.76	60	2.36	260 ± 5%	585	303	682	332	746	16,0	0.98	0,37	0.81	✓
SCF 250 - 013 - A	SCF 250 - 013 - D	12,7	0.50	75,4	2.97	62,7	2.47			309	695	340	765	19,0	1.16	0,38	0.84	✓
SCF 250 - 016 - A	SCF 250 - 016 - D	16	0.63	82	3.23	66	2.60			315	707	348	783	21,0	1.28	0,39	0.86	✓
-	SCF 250 - 019 - D	19	0.75	88	3.46	69	2.72			319	717	354	797	23,0	1.40	0,42	0.92	✓
SCF 250 - 025 - A	SCF 250 - 025 - D	25	0.98	100	3.94	75	2.95			325	731	364	818	28,0	1.71	0,44	0.97	✓
SCF 250 - 038 - A	SCF 250 - 038 - D	38	1.50	126	4.96	88	3.46	150 bar 2175 psi		334	751	377	848	38,0	2.32	0,50	1.10	✓
SCF 250 - 050 - A	SCF 250 - 050 - D	50	1.97	150	5.91	100	3.94			339	762	385	865	47,0	2.87	0,55	1.21	✓
SCF 250 - 063 - A	SCF 250 - 063 - D	63,5	2.50	177	6.97	113,5	4.47	+ 20 °C	+68 °F	343	771	391	878	58,0	3.54	0,63	1.39	✓
SCF 250 - 080 - A	SCF 250 - 080 - D	80	3.15	210	8.27	130	5.12			346	778	395	889	70,0	4.27	0,70	1.54	✓
SCF 250 - 100 - A	SCF 250 - 100 - D	100	3.94	250	9.84	150	5.91			349	784	399	898	86,0	5.25	0,75	1.65	✓
SCF 250 - 125 - A	SCF 250 - 125 - D	125	4.92	300	11.81	175	6.89			351	789	403	906	105,0	6.41	0,93	2.05	✓

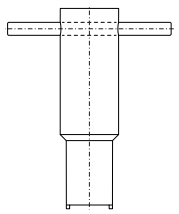

code: 58UT037A

p. 319

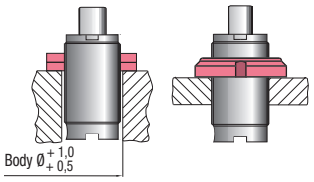

FCA 38 GM 38

HOW TO ORDER p. 121

INSTALLATION GUIDELINE p. 203

ISO 11901 - 1	VDI 3003	B2 4006 (BMW)	075.90.55 (FCA)
PG23D (Mazda)	B8 3180 220 000 001(MB)	K 32 S (Nissan)	E24.54.815.G (PSA)
EM24.54.700 (Renault)	SES-K 5404e (Suzuki)	39D 878 (VW)	

SC 500

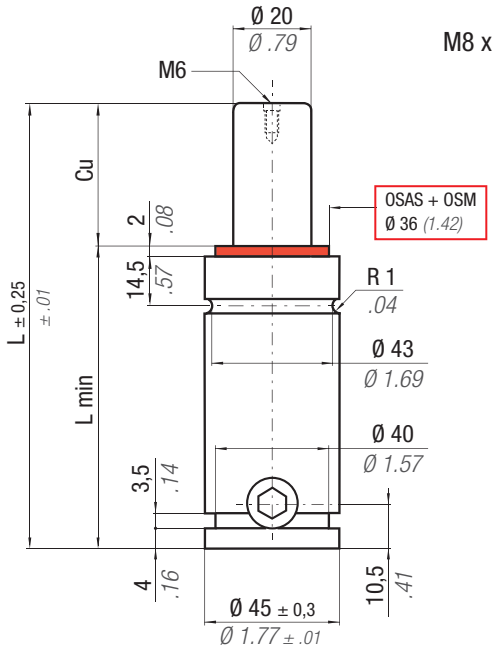

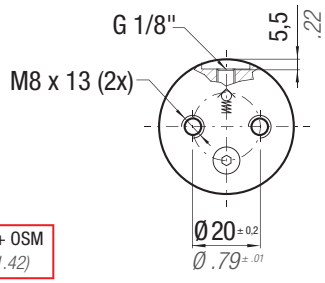

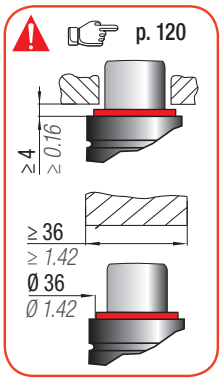

OSAS + OSM = OVER STROKE ACTIVE SAFETY + OVER STROKE MARKER

SW

Il nuovo codice sarà fornito solo ad esaurimento del vecchio

The new code will be supplied only when the old will be out of stock

Der neue Kode wird geliefert nur wenn der alte nicht mehr im Lager ist

Le nouveau code sera fourni uniquement lorsque le vieux stock sera ecoulé

El nuevo código será suministrado sólo cuando el viejo está fuera de stock

O novo código irá ser fornecido apenas quando o antigo esgotar stock

ACTIVE SAFETY

OSAS

USAS

OPAS

easy MANIFOLD p. 241

* $F1_i$ = Isothermal end force at 100% Cu p. 18

** $F1_p$ = Polytrophic end force at 100% Cu

N_2	°F 32 - 176	°C 0 - 80	ΔP ± 0,33 %/°C	P max 150 bar 2175 psi	P min 20 bar 290 psi	S 3,14 cm² 0.487 in²	SPM ~ 40 - 80 (at 20°C)	Max Speed 1,8 m/s	Maintenance kit 39BMSC00500D

SC
SCF

CODE PHASING OUT from 01/2014	NEW	Cu mm	Cu inch	L mm	L inch	L min mm	L min inch	F0 Initial force daN	F0 lb	$F1_i$ End force * daN	$F1_i$ lb	$F1_p$ End force ** daN	$F1_p$ lb	V0 cm³	V0 in³	~Kg	~lb	PED 2014/68/EU
-	SC 500 - 010 - D	10	0.39	105	4.13	95	3.74	470 ± 5% 150 bar 2175 psi + 20 °C +68 °F	1057	595	1338	673	1512	18,0	1.10	0,90	1.98	✓
SC 500 - 013 - B	SC 500 - 013 - D	12,7	0.50	110,4	4.35	97,7	3.85			611	1373	696	1565	20,0	1.22	1,00	2.20	✓
SC 500 - 025 - B	SC 500 - 025 - D	25	0.98	135	5.31	110	4.33			652	1466	759	1707	33,0	2.01	1,09	2.40	✓
SC 500 - 038 - B	SC 500 - 038 - D	38	1.50	161	6.34	123	4.84			673	1513	792	1780	46,0	2.81	1,20	2.65	✓
SC 500 - 050 - B	SC 500 - 050 - D	50	1.97	185	7.28	135	5.31			685	1539	810	1820	58,0	3.54	1,29	2.84	✓
SC 500 - 063 - B	SC 500 - 063 - D	63,5	2.50	212	8.35	148,5	5.85			693	1558	823	1850	72,0	4.39	1,38	3.04	✓
SC 500 - 080 - B	SC 500 - 080 - D	80	3.15	245	9.65	165	6.50			700	1573	834	1875	89,0	5.43	1,50	3.31	✓
SC 500 - 100 - B	SC 500 - 100 - D	100	3.94	285	11.22	185	7.28			706	1586	843	1895	109,0	6.65	1,64	3.62	✓
SC 500 - 125 - B	SC 500 - 125 - D	125	4.92	335	13.19	210	8.27			710	1597	850	1912	135,0	8.24	1,85	4.08	✓
SC 500 - 160 - B	SC 500 - 160 - D	160	6.30	405	15.94	245	9.65			715	1606	857	1927	170,0	10.37	2,10	4.63	✓
-	SC 500 - 200 - D	200	7.87	485	19.09	285	11.22			728	1637	878	1974	205,0	12.51	2,36	5.20	✓

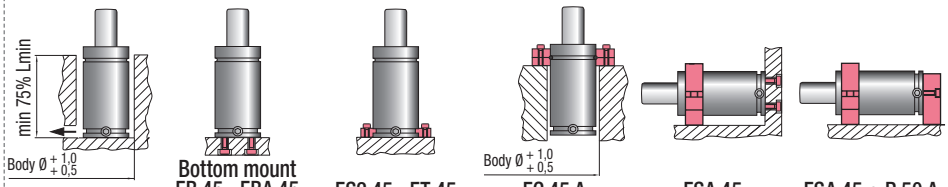

Drop-in

Bottom mount
FB 45 - FBA 45
FBB 45 - FBD 45

FS2 45 - FT 45
FS2A 45 - FTP 45

FC 45 A
FCQC 45

FSA 45
FSD 45 - FSE 45

FSA 45 + R 50 A
FSE 45 + R 50 A

HOW TO ORDER p. 121

INSTALLATION GUIDELINE p. 203

SC 750

ISO 11901 - 1	VDI 3003	B2 4006 (BMW)	075.90.55 (FCA)
W-DX35-6203 (Ford)	PG23D (Mazda)	B8 3180 220 000 001(MB)	K 32 S (Nissan)
E24.54.815.G (PSA)	EM24.54.700 (Renault)	SES-K 5404e (Suzuki)	39D 878 (VW)

SPECIAL SPRINGS

SW

OSAS + OSM = OVER STROKE ACTIVE SAFETY + OVER STROKE MARKER

ACTIVE SAFETY

OSAS

USAS

OPAS

Il nuovo codice sarà fornito solo ad esaurimento del vecchio

The new code will be supplied only when the old will be out of stock

Der neue Kode wird geliefert nur wenn der alte nicht mehr im Lager ist

Le nouveau code sera fourni uniquement lorsque le vieux stock sera ecoulé

El nuevo código será suministrado sólo cuando el viejo está fuera de stock

O novo código irá ser fornecido apenas quando o antigo esgotar stock

easy MANIFOLD p. 241

* $F1_i$ = Isothermal end force at 100% Cu p. 18

** $F1_p$ = Polytrophic end force at 100% Cu

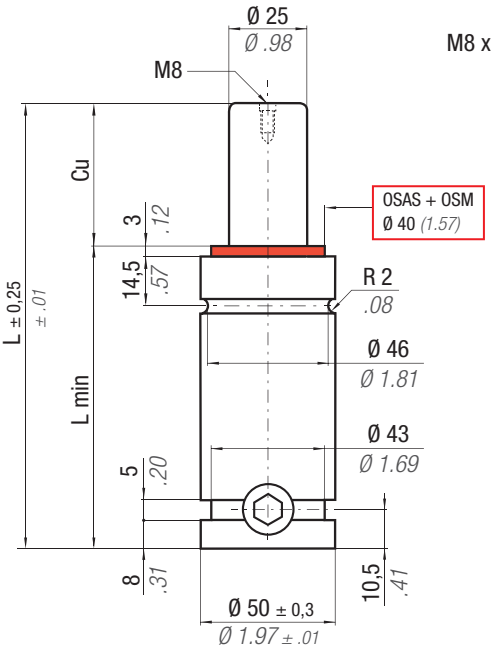

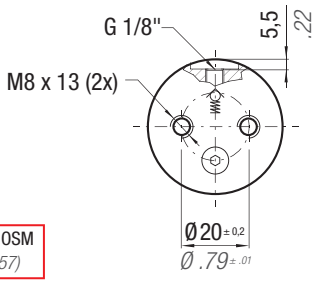

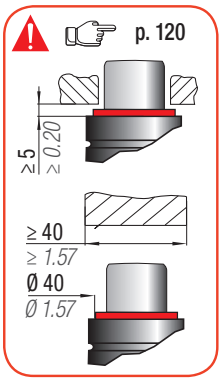

N_2	°F 32 - 176	°C 0 - 80	ΔP ± 0,33 %/°C	P max 150 bar 2175 psi	P min 20 bar 290 psi	S 4,91 cm² 0.761 in²	SPM ~ 15 - 50 (at 20°C)	Max Speed 1,8 m/s	Maintenance kit 39BMSC00750D

CODE PHASING OUT from 01/2014	NEW	Cu mm	Cu inch	L mm	L inch	L min mm	L min inch	Fo Initial force daN	Fo lb	$F1_i$ * End force daN	$F1_i$ lb	$F1_p$ ** End force daN	$F1_p$ lb	Vo cm³	Vo in³	~Kg	~lb	PED 2014/68/EU
SC 750 - 013 - B	SC 750 - 013 - D	12,7	0.50	120,4	4.74	107,7	4.24			902	2028	1009	2269	40,0	2.44	1,24	2.73	✓
SC 750 - 025 - B	SC 750 - 025 - D	25	0.98	145	5.71	120	4.72			977	2197	1122	2523	58,0	3.54	1,34	2.95	✓
SC 750 - 038 - B	SC 750 - 038 - D	38	1.50	171	6.73	133	5.24			1023	2300	1192	2681	77,0	4.70	1,45	3.20	✓
SC 750 - 050 - B	SC 750 - 050 - D	50	1.97	195	7.68	145	5.71			1050	2362	1235	2777	95,0	5.80	1,54	3.40	✓
SC 750 - 063 - B	SC 750 - 063 - D	63,5	2.50	222	8.74	158,5	6.24			1072	2410	1269	2854	115,0	7.02	1,65	3.64	✓
-	SC 750 - 075 - D	75	2.95	245	9.65	170	6.69			1086	2441	1291	2902	132,0	8.05	1,75	3.86	✓
SC 750 - 080 - B	SC 750 - 080 - D	80	3.15	255	10.04	175	6.89			1091	2452	1299	2920	140,0	8.54	1,79	3.95	✓
-	SC 750 - 088 - D	88	3.46	270	10.63	182	7.17	740	1664	1101	2475	1314	2954	150,0	9.15	1,85	4.08	✓
SC 750 - 100 - B	SC 750 - 100 - D	100	3.94	295	11.61	195	7.68	± 5%		1107	2488	1324	2976	169,0	10.31	1,96	4.32	✓
-	SC 750 - 113 - D	113	4.45	320	12.60	207	8.15	150 bar	2175 psi	1117	2511	1340	3012	188,0	11.47	2,06	4.54	✓
SC 750 - 125 - B	SC 750 - 125 - D	125	4.92	345	13.58	220	8.66			1121	2519	1346	3026	206,0	12.57	2,16	4.76	✓
-	SC 750 - 138 - D	138	5.43	370	14.57	232	9.13			1131	2543	1363	3064	224,0	13.66	2,27	5.00	✓
-	SC 750 - 150 - D	150	5.91	395	15.55	245	9.65	+ 20 °C	+68 °F	1140	2563	1378	3098	239,0	14.58	2,39	5.27	✓
SC 750 - 160 - B	SC 750 - 160 - D	160	6.30	415	16.34	255	10.04			1149	2582	1391	3126	252,0	15.37	2,49	5.49	✓
-	SC 750 - 175 - D	175	6.89	445	17.52	270	10.63			1160	2608	1408	3165	271,0	16.53	2,64	5.82	✓
SC 750 - 200 - B	SC 750 - 200 - D	200	7.87	495	19.49	295	11.61			1175	2642	1434	3223	302,0	18.42	2,89	6.37	✓
-	SC 750 - 225 - D	225	8.86	545	21.46	320	12.60			1188	2671	1455	3271	334,0	20.37	3,13	6.90	✓
SC 750 - 250 - B	SC 750 - 250 - D	250	9.84	595	23.43	345	13.58			1199	2696	1472	3310	365,0	22.27	3,32	7.32	✓
-	SC 750 - 275 - D	275	10.83	645	25.39	370	14.57			1208	2716	1488	3345	396,0	24.16	3,63	8.00	✓
SC 750 - 300 - B	SC 750 - 300 - D	300	11.81	695	27.36	395	15.55			1216	2735	1501	3374	428,0	26.11	3,88	8.55	✓

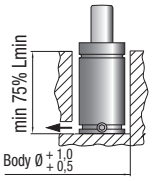

Drop-in

Bottom mount
FB 50 - FBA 50
FBB 50 - FBD 50

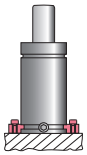

FS2 50 - FT 50
FS2A 50 - FTP 50

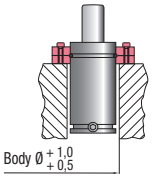

FC 50 A
FCQC 50

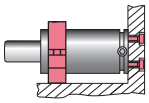

FSA 50
FSD 50 - FSE 50

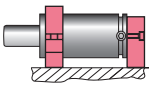

FSD 50 + R 50 A
FSE 50 + R 50 A

HOW TO ORDER p. 121

INSTALLATION GUIDELINE p. 203

ISO 11901 - 1	VDI 3003	B2 4006 (BMW)	075.90.55 (FCA)
W-DX35-6203 (Ford)	PG23D (Mazda)	B8 3180 220 000 001(MB)	K 32 S (Nissan)
E24.54.815.G (PSA)	EM24.54.700 (Renault)	SES-K 5404e (Suzuki)	39D 878 (VW)

SC 1500

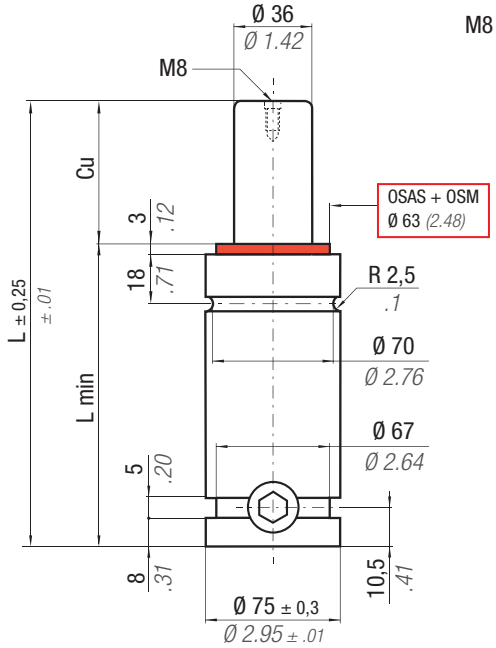

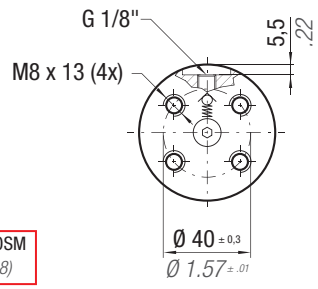

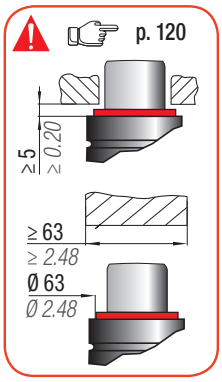

OSAS + OSM = OVER STROKE ACTIVE SAFETY + OVER STROKE MARKER

SW

Il nuovo codice sarà fornito solo ad esaurimento del vecchio

The new code will be supplied only when the old will be out of stock

Der neue Kode wird geliefert nur wenn der alte nicht mehr im Lager ist

Le nouveau code sera fourni uniquement lorsque le vieux stock sera ecoulé

El nuevo código será suministrado sólo cuando el viejo está fuera de stock

O novo código irá ser fornecido apenas quando o antigo esgotar stock

ACTIVE SAFETY

OSAS

USAS

OPAS

easy MANIFOLD p. 241

* $F1_i$ = Isothermal end force at 100% Cu p. 18

** $F1_p$ = Polytrophic end force at 100% Cu

N2	°F 32 - 176	°C 0 - 80	ΔP ± 0,33 %/°C	P max 150 bar 2175 psi	P min 20 bar 290 psi	S 10,18 cm² 1.578 in²	SPM ~ 15 - 50 (at 20°C)	Max Speed 1,8 m/s	Maintenance kit 39BMSC01500D Cu 13 ÷ 80 39BMSC01500DH Cu 88 ÷ 300

SC
SCF

CODE PHASING OUT from 01/2014	NEW	Cu mm	Cu inch	L mm	L inch	L min mm	L min inch	F0 Initial force daN	F0 lb	$F1_i$ End force * daN	$F1_i$ lb	$F1_p$ End force ** daN	$F1_p$ lb	V0 cm³	V0 in³	~Kg	~lb	PED 2014/68/EU
-	SC 1500 - 013 - D	13	0.51	135	5.31	122	4.80	1530 ± 5% 150 bar 2175 psi + 20 °C +68 °F	3440	1819	4089	2016	4532	97,0	5.92	3,26	7.19	✓
SC 1500 - 025 - B	SC 1500 - 025 - D	25	0.98	160	6.30	135	5.31			1925	4329	2174	4888	144,0	8.78	3,47	7.65	✓
SC 1500 - 038 - B	SC 1500 - 038 - D	38	1.50	186	7.32	148	5.83			2000	4496	2287	5141	191,0	11.65	3,67	8.09	✓
SC 1500 - 050 - B	SC 1500 - 050 - D	50	1.97	210	8.27	160	6.30			2045	4596	2355	5294	234,0	14.27	3,85	8.49	✓
SC 1500 - 063 - B	SC 1500 - 063 - D	63,5	2.50	237	9.33	173,5	6.83			2080	4675	2409	5415	283,0	17.26	4,05	8.93	✓
-	SC 1500 - 075 - D	75	2.95	260	10.24	185	7.28			2102	4725	2443	5492	324,0	19.76	4,23	9.33	✓
SC 1500 - 080 - B	SC 1500 - 080 - D	80	3.15	270	10.63	190	7.48			2110	4743	2455	5519	342,0	20.86	4,30	9.48	✓
-	SC 1500 - 088 - D	88	3.46	285	11.22	197	7.76			2130	4788	2486	5589	367,0	22.39	4,42	9.74	✓
SC 1500 - 100 - B	SC 1500 - 100 - D	100	3.94	310	12.20	210	8.27			2136	4802	2495	5609	414,0	25.25	4,60	10.14	✓
-	SC 1500 - 113 - D	113	4.45	335	13.19	222	8.74			2151	4836	2520	5665	459,0	28.00	4,78	10.54	✓
SC 1500 - 125 - B	SC 1500 - 125 - D	125	4.92	360	14.17	235	9.25			2158	4851	2529	5685	505,0	30.81	4,97	10.96	✓
-	SC 1500 - 138 - D	138	5.43	385	15.16	247	9.72			2169	4876	2548	5728	550,0	33.55	5,16	11.38	✓
-	SC 1500 - 150 - D	150	5.91	410	16.14	260	10.24			2173	4885	2554	5742	595,0	36.30	5,35	11.79	✓
SC 1500 - 160 - B	SC 1500 - 160 - D	160	6.30	430	16.93	270	10.63			2178	4896	2562	5760	631,0	38.49	5,50	12.13	✓
-	SC 1500 - 175 - D	175	6.89	460	18.11	285	11.22			2185	4912	2572	5782	685,0	41.79	5,73	12.63	✓
SC 1500 - 200 - B	SC 1500 - 200 - D	200	7.87	510	20.08	310	12.20			2198	4941	2592	5828	772,0	47.09	6,13	13.51	✓
-	SC 1500 - 225 - D	225	8.86	560	22.05	335	13.19			2219	4989	2625	5901	850,0	51.85	6,60	14.55	✓
SC 1500 - 250 - B	SC 1500 - 250 - D	250	9.84	610	24.02	360	14.17			2236	5027	2652	5962	928,0	56.61	7,08	15.61	✓
-	SC 1500 - 275 - D	275	10.83	660	22.05	385	15.16			2251	5060	2676	6016	1006,0	61.37	7,55	16.64	✓
SC 1500 - 300 - B	SC 1500 - 300 - D	300	11.81	710	27.95	410	16.14			2264	5089	2696	6061	1084,0	66.12	8,02	17.68	✓

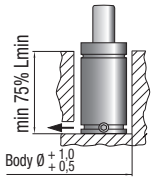

Drop-in

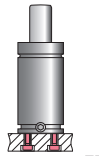

Bottom mount - FB 75
FBA 75 - FBB 75
FBC 75 - FBD 75

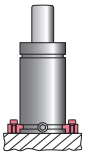

FS2 75 - FT 75
FS2A 75 - FTP 75

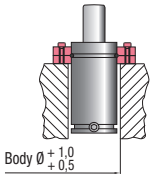

FC 75 A
FCQC 75

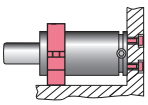

FSA 75
FSD 75 - FSE 75

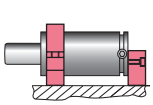

FSD 75 + R 75 A
FSE 75 + R 75 A

HOW TO ORDER p. 121

INSTALLATION GUIDELINE p. 203

SC 3000

ISO 11901 - 1	VDI 3003	B2 4006 (BMW)	075.90.55 (FCA)
W-DX35-6203 (Ford)	PG23D (Mazda)	B8 3180 220 000 001(MB)	K 32 S (Nissan)
E24.54.815.G (PSA)	EM24.54.700 (Renault)	SES-K 5404e (Suzuki)	39D 878 (VW)

SPECIAL SPRINGS

SW

OSAS + OSM = OVER STROKE ACTIVE SAFETY + OVER STROKE MARKER

ACTIVE SAFETY

OSAS

USAS

OPAS

Il nuovo codice sarà fornito solo ad esaurimento del vecchio

The new code will be supplied only when the old will be out of stock

Der neue Kode wird geliefert nur wenn der alte nicht mehr im Lager ist

Le nouveau code sera fourni uniquement lorsque le vieux stock sera ecoulé

El nuevo código será suministrado sólo cuando el viejo está fuera de stock

O novo código irá ser fornecido apenas quando o antigo esgotar stock

easy MANIFOLD p. 241

* $F1_i$ = Isothermal end force at 100% Cu p. 18

** $F1_p$ = Polytrophic end force at 100% Cu

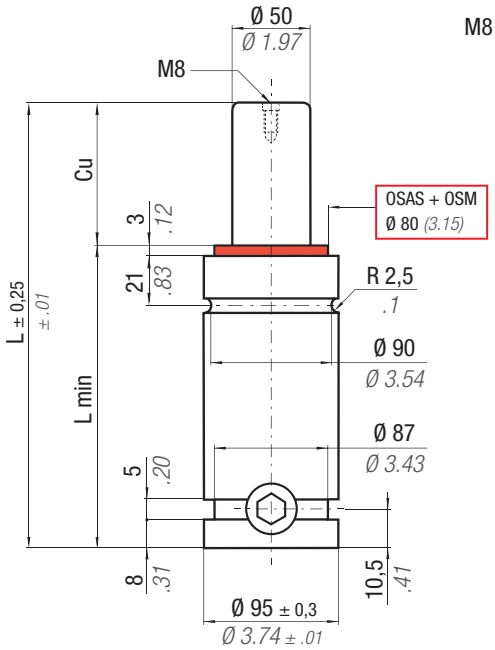

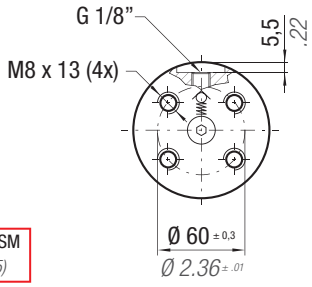

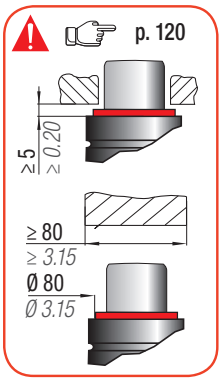

N2	°F 32 - 176	°C 0 - 80	ΔP ± 0,33 %/°C	P max 150 bar 2175 psi	P min 20 bar 290 psi	S 19,63 cm² 3.043 in²	SPM ~ 15 - 50 (at 20°C)	Max Speed 1,8 m/s	Maintenance kit 39BMSC03000D Cu 13 ÷ 80 39BMSC03000DH Cu 88 ÷ 300

CODE PHASING OUT from 01/2014	NEW	Cu mm	Cu inch	L mm	L inch	L min mm	L min inch	F0 Initial force daN	F0 lb	$F1_i$ * End force daN	$F1_i$ lb	$F1_p$ ** End force daN	$F1_p$ lb	V0 cm³	V0 in³	~Kg	~lb	PED 2014/68/EU
-	SC 3000 - 013 - D	13	0.51	145	5.71	132	5.20	2945 ± 5%	6621	3528	7931	3917	8806	181,0	11.04	5,57	12.28	✓
SC 3000 - 025 - B	SC 3000 - 025 - D	25	0.98	170	6.69	145	5.71			3775	8487	4286	9636	261,0	15.92	5,90	13.01	✓
SC 3000 - 038 - B	SC 3000 - 038 - D	38	1.50	196	7.72	158	6.22			3955	8891	4559	10250	340,0	20.74	6,21	13.69	✓
SC 3000 - 050 - B	SC 3000 - 050 - D	50	1.97	220	8.66	170	6.69			4067	9143	4732	10638	413,0	25.19	6,50	14.33	✓
SC 3000 - 063 - B	SC 3000 - 063 - D	63,5	2.50	247	9.72	183,5	7.22			4158	9347	4873	10954	496,0	30.26	6,83	15.06	✓
-	SC 3000 - 075 - D	75	2.95	270	10.63	195	7.68			4216	9478	4964	11160	566,0	34.53	7,10	15.65	✓
SC 3000 - 080 - B	SC 3000 - 080 - D	80	3.15	280	11.02	200	7.87			4238	9527	4997	11234	596,0	36.36	7,22	15.92	✓
-	SC 3000 - 088 - D	88	3.46	295	11.61	207	8.15			4277	9615	5059	11373	642,0	39.16	7,41	16.34	✓
SC 3000 - 100 - B	SC 3000 - 100 - D	100	3.94	320	12.60	220	8.66			4307	9683	5105	11476	718,0	43.80	7,67	16.91	✓
-	SC 3000 - 113 - D	113	4.45	345	13.58	232	9.13			4348	9775	5171	11625	795,0	48.50	7,97	17.57	✓
SC 3000 - 125 - B	SC 3000 - 125 - D	125	4.92	370	14.57	245	9.65	150 bar 2175 psi		4367	9817	5201	11692	871,0	53.13	8,27	18.23	✓
-	SC 3000 - 138 - D	138	5.43	395	15.55	257	10.12			4398	9887	5250	11802	947,0	57.77	8,57	18.89	✓
-	SC 3000 - 150 - D	150	5.91	420	16.54	270	10.63	+ 20 °C +68 °F		4411	9916	5270	11847	1023,0	62.40	8,87	19.56	✓
SC 3000 - 160 - B	SC 3000 - 160 - D	160	6.30	440	17.32	280	11.02			4425	9948	5292	11897	1085,0	66.19	9,11	20.08	✓
-	SC 3000 - 175 - D	175	6.89	470	18.50	295	11.61			4443	9988	5322	11964	1176,0	71.74	9,47	20.88	✓
SC 3000 - 200 - B	SC 3000 - 200 - D	200	7.87	520	20.47	320	12.60			4469	10047	5362	12055	1329,0	81.07	10,08	22.22	✓
-	SC 3000 - 225 - D	225	8.86	570	22.44	345	13.58			4489	10092	5395	12128	1481,0	90.34	10,68	23.55	✓
SC 3000 - 250 - B	SC 3000 - 250 - D	250	9.84	620	24.41	370	14.57			4506	10130	5422	12189	1634,0	99.67	11,28	24.87	✓
-	SC 3000 - 275 - D	275	10.83	670	26.38	395	15.55			4520	10161	5444	12239	1786,0	108.95	11,88	26.19	✓
SC 3000 - 300 - B	SC 3000 - 300 - D	300	11.81	720	28.35	420	16.54			4532	10188	5463	12282	1939,0	118.28	12,49	27.54	✓

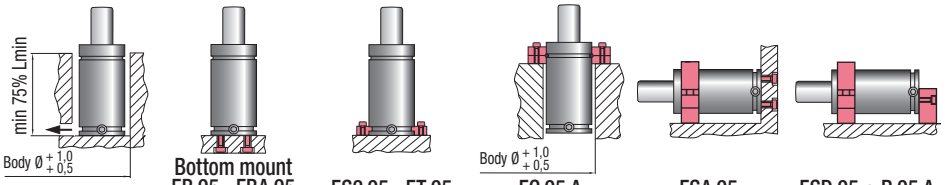

Drop-in

Bottom mount FB 95 - FBA 95 FBB 95

FS2 95 - FT 95 FS2A 95 - FTP 95

FC 95 A FCQC 95

FSA 95 FSD 95 - FSE 95

FSD 95 + R 95 A FSE 95 + R 95 A

HOW TO ORDER p. 121

INSTALLATION GUIDELINE p. 203

ISO 11901 - 1	075.90.55 (FCA)	W-DX35-6203 (Ford)	EM24.54.700 (Renault)
PG23D (Mazda)	VDI 3003	B8 3180 220 000 001(MB)	39D 878 (VW)
SES-K 5404e (Suzuki)	B2 4006 (BMW)	E24.54.815.G (PSA)	K 32 S (Nissan)

SC 5000

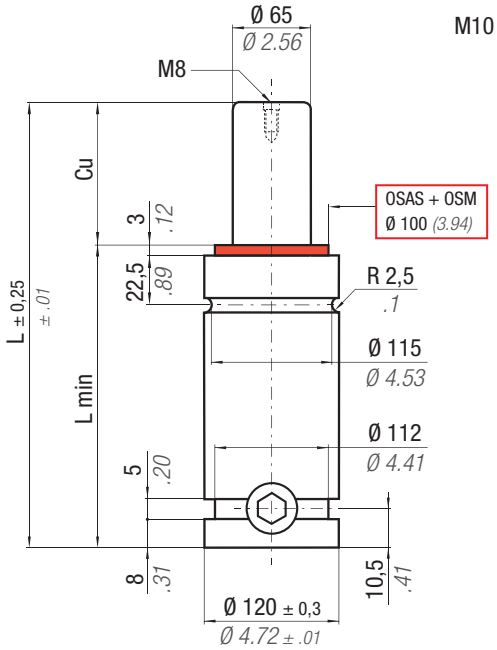

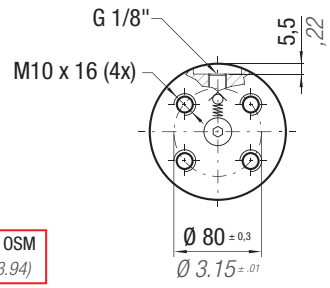

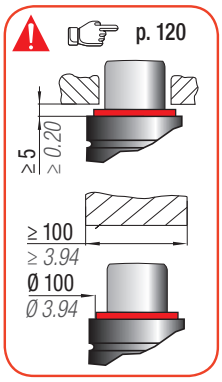

OSAS + OSM = OVER STROKE ACTIVE SAFETY + OVER STROKE MARKER

SW

Il nuovo codice sarà fornito solo ad esaurimento del vecchio

The new code will be supplied only when the old will be out of stock

Der neue Kode wird geliefert nur wenn der alte nicht mehr im Lager ist

Le nouveau code sera fourni uniquement lorsque le vieux stock sera ecoulé

El nuevo código será suministrado sólo cuando el viejo está fuera de stock

O novo código irá ser fornecido apenas quando o antigo esgotar stock

ACTIVE SAFETY

OSAS

USAS

OPAS

easy MANIFOLD p. 241

* $F1_i$ = Isothermal end force at 100% Cu p. 18

** $F1_p$ = Polytrophic end force at 100% Cu

N2	°F 32 - 176	°C 0 - 80	ΔP ± 0,33 %/°C	P max 150 bar 2175 psi	P min 20 bar 290 psi	S 33,18 cm² 5.143 in²	SPM ~ 15 - 50 (at 20°C)	Max Speed 1,8 m/s	Maintenance kit 39BMSC05000D Cu 25 ÷ 80 39BMSC05000DH Cu 88 ÷ 300

SC
SCF

CODE PHASING OUT from 01/2014	NEW	Cu mm	Cu inch	L mm	L inch	L min mm	L min inch	F0 Initial force daN	F0 lb	$F1_i$ End force * daN	$F1_i$ lb	$F1_p$ End force ** daN	$F1_p$ lb	V0 cm³	V0 in³	~Kg	~lb	PED 2014/68/EU
SC 5000 - 025 - B	SC 5000 - 025 - D	25	0.98	190	7.48	165	6.50	4980 ± 5% 150 bar 2175 psi + 20 °C +68 °F	11195	6316	14199	7148	16068	457,0	27.88	10,94	24.12	✓
SC 5000 - 038 - B	SC 5000 - 038 - D	38	1.50	216	8.50	178	7.01			6652	14955	7657	17214	583,0	35.56	11,46	25.26	✓
SC 5000 - 050 - B	SC 5000 - 050 - D	50	1.97	240	9.45	190	7.48			6872	15448	7994	17972	699,0	42.64	11,94	26.32	✓
SC 5000 - 063 - B	SC 5000 - 063 - D	63,5	2.50	267	10.51	203,5	8.01			7077	15910	8313	18688	823,0	50.20	12,56	27.69	✓
-	SC 5000 - 075 - D	75	2.95	290	11.42	215	8.46			7176	16132	8467	19035	941,0	57.40	12,94	28.53	✓
SC 5000 - 080 - B	SC 5000 - 080 - D	80	3.15	300	11.81	220	8.66			7221	16232	8537	19193	989,0	60.33	13,15	28.99	✓
-	SC 5000 - 088 - D	88	3.46	315	12.40	227	8.94			7300	16411	8662	19473	1061,0	64.72	13,39	29.52	✓
SC 5000 - 100 - B	SC 5000 - 100 - D	100	3.94	340	13.39	240	9.45			7367	16562	8768	19712	1182,0	72.10	13,89	30.62	✓
-	SC 5000 - 113 - D	113	4.45	365	14.37	252	9.92			7454	16757	8906	20021	1303,0	79.48	14,40	31.75	✓
SC 5000 - 125 - B	SC 5000 - 125 - D	125	4.92	390	15.35	265	10.43			7499	16858	8977	20181	1424,0	86.86	14,90	32.85	✓
-	SC 5000 - 138 - D	138	5.43	415	16.34	277	10.91			7564	17005	9081	20415	1545,0	94.25	15,40	33.95	✓
-	SC 5000 - 150 - D	150	5.91	440	17.32	290	11.42			7595	17074	9130	20525	1665,0	101.57	15,90	35.05	✓
SC 5000 - 160 - B	SC 5000 - 160 - D	160	6.30	460	18.11	300	11.81			7627	17145	9181	20639	1762,0	107.48	16,30	35.94	✓
-	SC 5000 - 175 - D	175	6.89	490	19.29	315	12.40			7668	17238	9247	20788	1907,0	116.33	16,90	37.26	✓
SC 5000 - 200 - B	SC 5000 - 200 - D	200	7.87	540	21.26	340	13.39			7726	17369	9340	20997	2148,0	131.03	17,91	39.48	✓
-	SC 5000 - 225 - D	225	8.86	590	23.23	365	14.37			7773	17474	9415	21166	2390,0	145.79	18,91	41.69	✓
SC 5000 - 250 - B	SC 5000 - 250 - D	250	9.84	640	25.20	390	15.35			7811	17560	9477	21305	2632,0	160.55	19,91	43.89	✓
-	SC 5000 - 275 - D	275	10.83	690	27.17	415	16.34			7843	17632	9529	21422	2873,0	175.25	20,92	46.12	✓
SC 5000 - 300 - B	SC 5000 - 300 - D	300	11.81	740	29.13	440	17.32			7871	17694	9573	21521	3115,0	190.02	21,92	48.33	✓

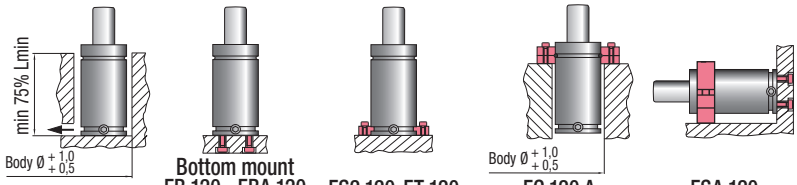

Drop-in

Bottom mount
FB 120 - FBA 120
FBB 120

FS2 120-FT 120
FS2A 120-FTP 120

FC 120 A
FCQC 120

FSA 120
FSD 120

HOW TO ORDER p. 121

INSTALLATION GUIDELINE p. 203

SC 7500

ISO 11901 - 1	VDI 3003	B2 4006 (BMW)	075.90.55 (FCA)
W-DX35-6203 (Ford)	PG23D (Mazda)	B8 3180 220 000 001(MB)	E24.54.815.G (PSA)
EM24.54.700 (Renault)	39D 878 (VW)		

SPECIAL SPRINGS

SW

OSAS + OSM = OVER STROKE ACTIVE SAFETY + OVER STROKE MARKER

ACTIVE SAFETY

OSAS

USAS

OPAS

Il nuovo codice sarà fornito solo ad esaurimento del vecchio

The new code will be supplied only when the old will be out of stock

Der neue Kode wird geliefert nur wenn der alte nicht mehr im Lager ist

Le nouveau code sera fourni uniquement lorsque le vieux stock sera ecoulé

El nuevo código será suministrado sólo cuando el viejo está fuera de stock

O novo código irá ser fornecido apenas quando o antigo esgotar stock

easy MANIFOLD p. 241

* $F1_i$ = Isothermal end force at 100% Cu p. 18

** $F1_p$ = Polytrophic end force at 100% Cu

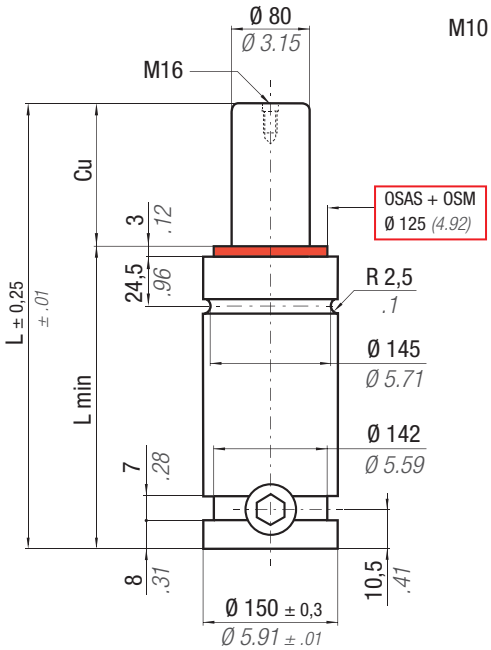

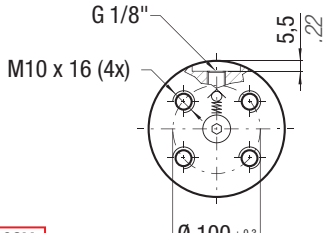

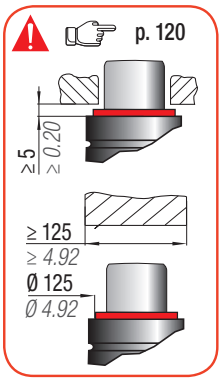

N_2	°F 32 - 176	°C 0 - 80	ΔP ± 0,33 %/°C	P max 150 bar 2175 psi	P min 20 bar 290 psi	S 50,27 cm² 7.792 in²	SPM ~ 15 - 50 (at 20°C)	Max Speed 1,8 m/s	Maintenance kit 39BMSC07500D Cu 25 ÷ 80 39BMSC07500DH Cu 88 ÷ 300

CODE PHASING OUT from 01/2014	NEW	Cu mm	Cu inch	L mm	L inch	L min mm	L min inch	F0 Initial force daN	F0 lb	$F1_i$ * End force daN	$F1_i$ lb	$F1_p$ ** End force daN	$F1_p$ lb	V0 cm³	V0 in³	~Kg	~lb	PED 2014/68/EU
SC 7500 - 025 - B	SC 7500 - 025 - D	25	0.98	205	8.07	180	7.09	7540 ± 5%	16950	9330	20975	10472	23543	767,0	46.79	18,71	41.25	✓
SC 7500 - 038 - B	SC 7500 - 038 - D	38	1.50	231	9.09	193	7.60			9809	22052	11192	25161	963,0	58.74	19,50	42.99	✓
SC 7500 - 050 - B	SC 7500 - 050 - D	50	1.97	255	10.04	205	8.07			10129	22771	11679	26255	1144,0	69.78	20,24	44.62	✓
SC 7500 - 063 - B	SC 7500 - 063 - D	63,5	2.50	282	11.10	218,5	8.60			10400	23380	12095	27191	1348,0	82.23	21,06	46.43	✓
-	SC 7500 - 075 - D	75	2.95	305	12.10	230	9.06			10581	23787	12375	27820	1522,0	92.84	21,76	47.97	✓
SC 7500 - 080 - B	SC 7500 - 080 - D	80	3.15	315	12.40	235	9.25			10648	23938	12480	28057	1597,0	97.42	22,07	48.66	✓
-	SC 7500 - 088 - D	88	3.46	330	12.99	242	9.53			10778	24230	12682	28510	1706,0	104.07	22,45	49.49	✓
SC 7500 - 100 - B	SC 7500 - 100 - D	100	3.94	355	13.98	255	10.04			10871	24439	12828	28838	1899,0	115.84	23,23	51.21	✓
-	SC 7500 - 113 - D	113	4.45	380	14.96	267	10.51			11013	24758	13051	29340	2083,0	127.06	23,98	52.87	✓
SC 7500 - 125 - B	SC 7500 - 125 - D	125	4.92	405	15.94	280	11.02	150 bar 2175 psi		11073	24893	13146	29553	2276,0	138.84	24,76	54.59	✓
-	SC 7500 - 138 - D	138	5.43	430	16.93	292	11.50			11182	25138	13318	29940	2460,0	150.06	25,51	56.24	✓
-	SC 7500 - 150 - D	150	5.91	455	17.91	305	12.10			11222	25228	13382	30084	2654,0	161.89	26,28	57.94	✓
SC 7500 - 160 - B	SC 7500 - 160 - D	160	6.30	475	18.70	315	12.40	+ 20 °C	+68 °F	11272	25340	13459	30258	2805,0	171.11	26,90	59.30	✓
-	SC 7500 - 175 - D	175	6.89	505	19.88	330	12.99			11337	25487	13563	30491	3031,0	184.89	27,81	61.31	✓
SC 7500 - 200 - B	SC 7500 - 200 - D	200	7.87	555	21.85	355	13.98			11427	25689	13707	30815	3409,0	207.95	29,34	64.68	✓
-	SC 7500 - 225 - D	225	8.86	605	23.82	380	14.96			11501	25855	13824	31078	3786,0	230.95	30,87	68.06	✓
SC 7500 - 250 - B	SC 7500 - 250 - D	250	9.84	655	25.79	405	15.94			11562	25992	13921	31296	4164,0	254.00	32,39	71.41	✓
-	SC 7500 - 275 - D	275	10.83	705	27.76	430	16.93			11613	26107	14003	31480	4541,0	277.00	33,92	74.78	✓
SC 7500 - 300 - B	SC 7500 - 300 - D	300	11.81	755	29.72	455	17.91			11657	26206	14073	31637	4919,0	300.06	35,45	78.15	✓

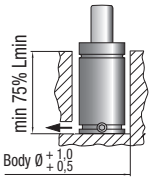

Drop-in

Bottom mount
FB 150 - FBA 150
FBB 150 - FBD 150

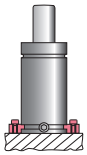

FS2 150-FT 150
FS2A 150-FTP 150

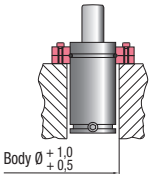

FC 150 A
FCQC 150

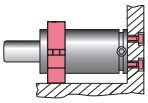

FSA 150
FSD 150

HOW TO ORDER p. 121

INSTALLATION GUIDELINE p. 203

ISO 11901 - 1	VDI 3003	075.90.55 (FCA)	B8 3180 220 000 001(MB)
EM24.54.700 (Renault)	39D 878 (VW)		

SC 10000

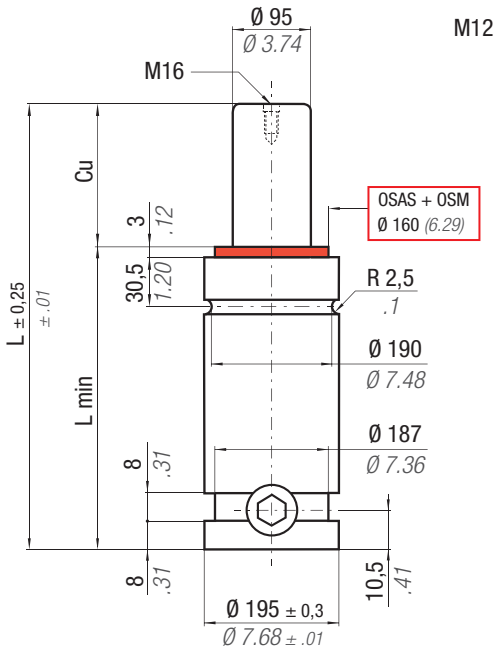

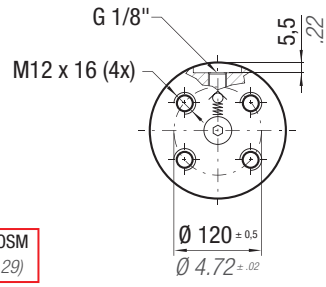

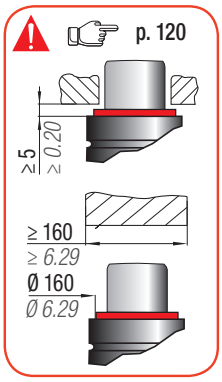

OSAS + OSM = OVER STROKE ACTIVE SAFETY + OVER STROKE MARKER

Il nuovo codice sarà fornito solo ad esaurimento del vecchio

The new code will be supplied only when the old will be out of stock

Der neue Kode wird geliefert nur wenn der alte nicht mehr im Lager ist

Le nouveau code sera fourni uniquement lorsque le vieux stock sera ecoulé

El nuevo código será suministrado sólo cuando el viejo está fuera de stock

O novo código irá ser fornecido apenas quando o antigo esgotar stock

easy MANIFOLD p. 241

* $F1_i$ = Isothermal end force at 100% Cu p. 18

** $F1_p$ = Polytrophic end force at 100% Cu

SW

ACTIVE SAFETY

OSAS

USAS

OPAS

N2	°F 32 - 176	°C 0 - 80	ΔP ± 0,33 %/°C	P max 150 bar 2175 psi	P min 20 bar 290 psi	S 70,88 cm² 10.986 in²	SPM ~ 15 - 50 (at 20°C)	Max Speed 1,8 m/s	Maintenance kit 39BMSC10000D

SC
SCF

CODE PHASING OUT from 01/2014	NEW	Cu mm	Cu inch	L mm	L inch	L min mm	L min inch	F0 Initial force daN	F0 lb	$F1_i$ End force * daN	$F1_i$ lb	$F1_p$ End force ** daN	$F1_p$ lb	V0 cm³	V0 in³	~Kg	~lb	PED 2014/68/EU
SC 10000 - 025 - C	SC 10000 - 025 - D	25	0.98	210	8.27	185	7.28	10600 ± 5%	23830	12892	28981	14373	32311	1186,0	72.35	33,73	74.36	✓
SC 10000 - 038 - C	SC 10000 - 038 - D	38	1.50	236	9.29	198	7.80			13463	30267	15225	34228	1497,0	91.32	35,08	77.34	✓
SC 10000 - 050 - C	SC 10000 - 050 - D	50	1.97	260	10.24	210	8.27			13838	31108	15790	35497	1784,0	108.82	36,32	80.07	✓
SC 10000 - 063 - C	SC 10000 - 063 - D	63,5	2.50	287	11.30	223,5	8.80			14151	31812	16266	36567	2108,0	128.59	37,72	83.16	✓
SC 10000 - 080 - C	SC 10000 - 080 - D	80	3.15	320	12.60	240	9.45			14434	32450	16700	37543	2503,0	152.68	39,44	86.95	✓
SC 10000 - 100 - C	SC 10000 - 100 - D	100	3.94	360	14.17	260	10.24	150 bar 2175 psi		14686	33015	17087	38414	2982,0	181.90	41,51	91.51	✓
SC 10000 - 125 - C	SC 10000 - 125 - D	125	4.92	410	16.14	285	11.22			14912	33524	17438	39202	3581,0	218.44	44,11	97.25	✓
SC 10000 - 160 - C	SC 10000 - 160 - D	160	6.30	480	18.90	320	12.60	+ 20 °C	+68 °F	15132	34018	17780	39971	4419,0	269.56	47,74	105.25	✓
SC 10000 - 200 - C	SC 10000 - 200 - D	200	7.87	560	22.05	360	14.17			15345	34498	18114	40722	5343,0	325.92	52,17	115.02	✓
SC 10000 - 250 - C	SC 10000 - 250 - D	250	9.84	660	25.98	410	16.14			15696	35286	18665	41961	6348,0	387.23	58,87	129.79	✓
SC 10000 - 300 - C	SC 10000 - 300 - D	300	11.81	760	29.92	460	18.11			15960	35879	19083	42901	7354,0	448.59	65,57	144.56	✓

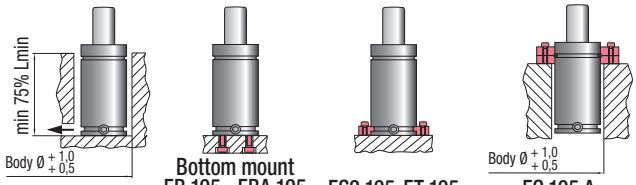

HOW TO ORDER p. 121

INSTALLATION GUIDELINE p. 203

ISO	VDI	BMW
FCA	VW	

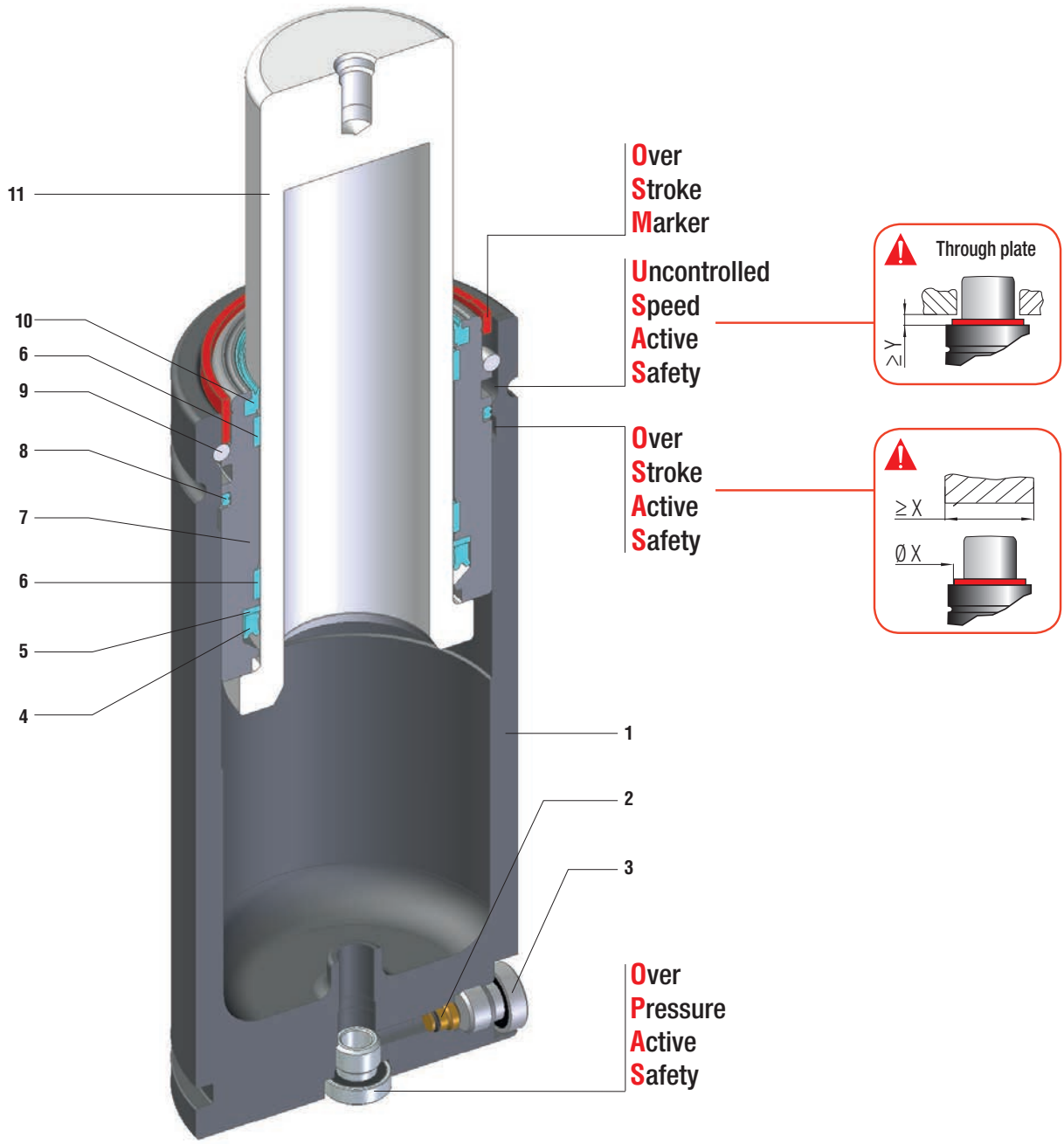

ISO standard, forza potenziata - ISO standard, high force - ISO Standard, erhöhte Kraft
Standard ISO, force majorée - ISO standard, fuerza potenciada - Norma ISO, força permitida

SEALING	ROD SEAL
DESIGN	BUSH - BODY DESIGN

1	Body	**5**	Back-up ring	**9**	Retaining ring
2	Valve	**6**	Guide ring	**10**	Rod wiper
3	Plug	**7**	Bush	**11**	Rod (nitrited superfinished)
4	Rod seal	**8**	Dual ring seal		

RANGE CHART

Model	Body Ø		Stroke Cu		Initial force F0		OSAS	USAS	OPAS	SKUDO	SW
	mm	*inch*	mm	*inch*	daN	*lb*					
H 300	32	*1.26*	10 - 125	*0.39 - 4.92*	300	*674*	✓	✓	✓	-	✓
H 500	38	*1.50*	10 - 125	*0.39 - 4.92*	470	*1057*	✓	✓	✓	-	✓
HF 500	M 38 X 1,5		10 - 125	*0.39 - 4.92*	470	*1057*	✓	✓	✓	-	✓
H 700	45	*1.77*	10 - 160	*0.51 - 6.30*	680	*1529*	✓	✓	✓	-	✓
H 1000	50	*1.97*	13 - 300	*0.51 - 11.81*	920	*2383*	✓	✓	✓	-	✓
■ H 1500	63	*2.48*	13 - 300	*0.51 - 11.81*	1530	*3440*	✓	✓	✓	-	✓
H 2400	75	*2.95*	25 - 300	*0.98 - 11.81*	2385	*5362*	✓	✓	✓	-	✓
H 4200	95	*3.74*	25 - 300	*0.98 - 11.81*	4240	*9532*	✓	✓	✓	-	✓
H 6600	120	*4.72*	25 - 300	*0.98 - 11.81*	6630	*14905*	✓	✓	✓	-	✓
H 9500	150	*5.91*	25 - 300	*0.98 - 11.81*	9540	*21446*	✓	✓	✓	-	✓
H 18500	195	*7.68*	25 - 300	*0.98 - 11.81*	18400	*41365*	✓	✓	✓	-	✓

✓ Built-in as standard ✓ Optional upon request

HOW TO ORDER

Series — Revision code — H HF

Model — **H2400-050-D-E-W**

Stroke — Version

Available versions

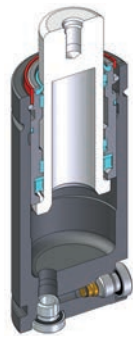

H 2400-050-D

Standard code

Self contained

H 2400-050-D-W

Add "-W" to standard code

Self contained + Secondary wiper

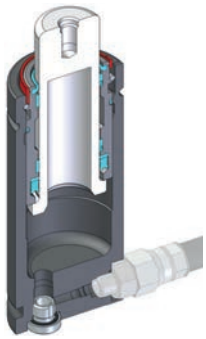

H 2400-050-D-N

Add "-N" to standard code

Linkable

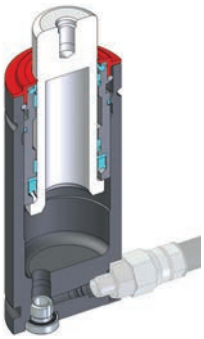

H 2400-050-D-N-W

Add "-N-W" to standard code

Linkable + Secondary wiper

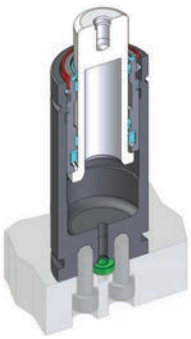

H 2400-050-D-E

Add "-E" to standard code

Easy Manifold

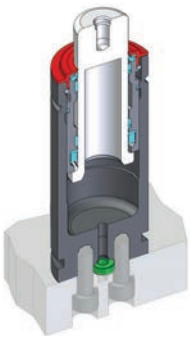

H 2400-050-D-E-W

Add "-E-W" to standard code

Easy Manifold + Secondary wiper

SPECIAL SPRINGS

SW

OSAS + OSM = OVER STROKE ACTIVE SAFETY + OVER STROKE MARKER

ACTIVE SAFETY

easy MANIFOLD p. 241

OSAS

USAS

OPAS

* $F1_i$ = Isothermal end force at 100% Cu p. 18

** $F1_p$ = Polytrophic end force at 100% Cu

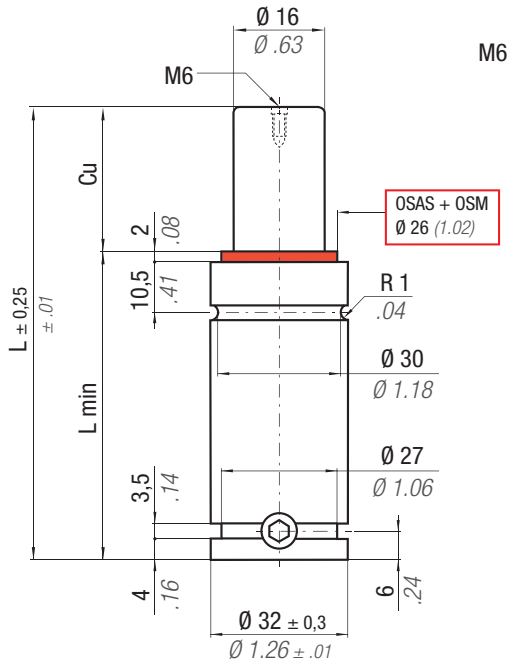

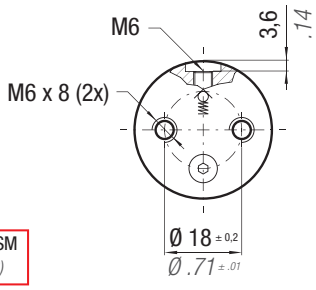

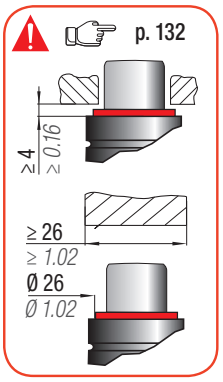

N2	°F 32 - 176	°C 0 - 80	ΔP ± 0,33 %/°C	P max 150 bar 2175 psi	P min 20 bar 290 psi	S 2,01 cm² 0.312 in²	SPM ~ 30 ÷ 100 (at 20°C)	Max Speed 1,8 m/s	Maintenance kit 39BMRV00350C

CODE	Cu mm	Cu inch	L mm	L inch	L min mm	L min inch	Fo Initial force daN	Fo lb	$F1_i$ * End force daN	$F1_i$ lb	$F1_p$ ** End force daN	$F1_p$ lb	Vo cm³	Vo in³	~Kg	~lb	PED 2014/68/EU
H 300 - 010 - C	10	0.39	70	2.76	60	2.36	300 ± 5%	674	350	787	385	865	17,0	1.04	0,22	0.49	✓
H 300 - 013 - C	13	0.51	75,7	2.98	62,7	2.47			361	811	400	900	19,0	1.16	0,23	0.51	✓
H 300 - 016 - C	16	0.63	82	3.23	66	2.60			369	829	412	927	21,0	1.28	0,24	0.53	✓
H 300 - 025 - C	25	0.98	100	3.94	75	2.95			389	875	443	995	26,0	1.59	0,26	0.57	✓
H 300 - 038 - C	38	1.50	126	4.96	88	3.46	150 bar 2175 psi		409	919	473	1062	34,0	2.07	0,31	0.68	✓
H 300 - 050 - C	50	1.97	150	5.91	100	3.94			421	947	492	1105	41,0	2.50	0,35	0.77	✓
H 300 - 063 - C	63	2.48	176,5	6.95	113,5	4.47			430	966	505	1136	49,0	2.99	0,39	0.86	✓
H 300 - 080 - C	80	3.15	210	8.27	130	5.12	+ 20 °C	+68 °F	440	989	521	1171	59,0	3.60	0,44	0.97	✓
H 300 - 100 - C	100	3.94	250	9.84	150	5.91			448	1006	533	1199	71,0	4.33	0,51	1.12	✓
H 300 - 125 - C	125	4.92	300	11.81	175	6.89			454	1022	544	1223	86,0	5.25	0,59	1.30	✓

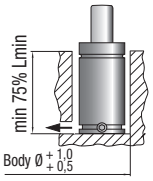

Drop-in

Bottom mount

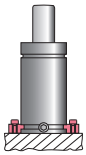

FS2A 32
FS2B 32

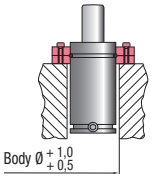

FC 32 A
FCQC 32

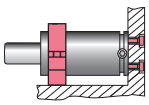

FSA 32
FSD 32

HOW TO ORDER p. 133

INSTALLATION GUIDELINE p. 203

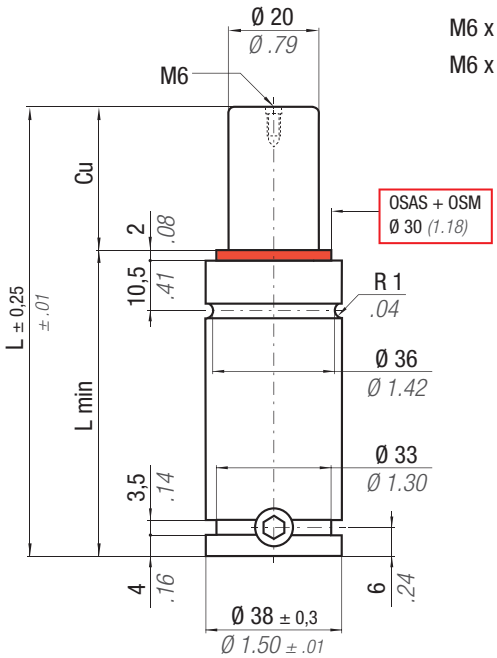

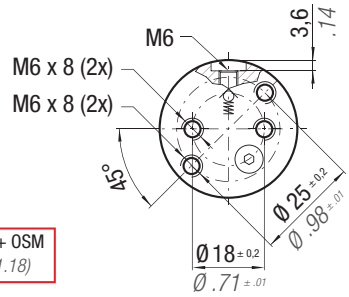

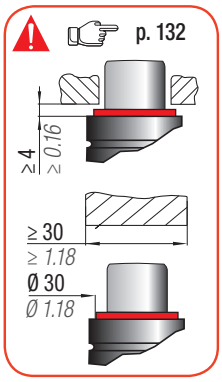

OSAS + OSM = OVER STROKE ACTIVE SAFETY + OVER STROKE MARKER

SW

easy MANIFOLD p. 241

ACTIVE SAFETY

OSAS

USAS

OPAS

* $F1_i$ = Isothermal end force at 100% Cu p. 18

** $F1_p$ = Polytrophic end force at 100% Cu

N_2	°F 32 - 176 / °C 0 - 80	ΔP	P max	P min	S	SPM	Max Speed	Maintenance kit
		± 0,33 %/°C	150 bar *2175 psi*	20 bar *290 psi*	3,14 cm² *0.487 in²*	~ 30 - 100 (at 20°C)	1,8 m/s	39BMRV00500C

CODE	Cu mm	Cu inch	L mm	L inch	L min mm	L min inch	F0 Initial force daN	F0 lb	$F1_i$ * End force daN	$F1_i$ lb	$F1_p$ ** End force daN	$F1_p$ lb	V0 cm³	V0 in³	~Kg	~lb	PED 2014/68/EU
H 500 - 010 - C	10	0.39	70	2.76	60	2.36	470 ± 5%	1057	559	1257	619	1391	24,0	1.46	0,32	0.71	✓
H 500 - 013 - C	13	0.51	75,7	2.98	62,7	2.47			578	1300	647	1455	26,0	1.59	0,33	0.73	✓
H 500 - 016 - C	16	0.63	82	3.23	66	2.60			593	1333	669	1504	29,0	1.77	0,34	0.75	✓
H 500 - 019 - C	19	0.75	88	3.46	69	2.72			606	1363	690	1550	31,0	1.89	0,36	0.79	✓
H 500 - 025 - C	25	0.98	100	3.94	75	2.95			629	1415	724	1628	36,0	2.20	0,39	0.86	✓
H 500 - 038 - C	38	1.50	126	4.96	88	3.46	150 bar *2175 psi*		664	1494	778	1750	48,0	2.93	0,45	0.99	✓
H 500 - 050 - C	50	1.97	150	5.91	100	3.94			687	1544	813	1828	58,0	3.54	0,50	1.10	✓
H 500 - 063 - C	63	2.48	176,5	6.95	113,5	4.47	+ 20 °C *+68 °F*		702	1579	838	1883	70,0	4.27	0,57	1.26	✓
H 500 - 080 - C	80	3.15	210	8.27	130	5.12			721	1620	867	1948	84,0	5.12	0,64	1.41	✓
H 500 - 100 - C	100	3.94	250	9.84	150	5.91			734	1651	889	1998	101,0	6.16	0,74	1.63	✓
H 500 - 125 - C	125	4.92	300	11.81	175	6.89			746	1678	908	2042	123,0	7.50	0,86	1.90	✓

H
HF

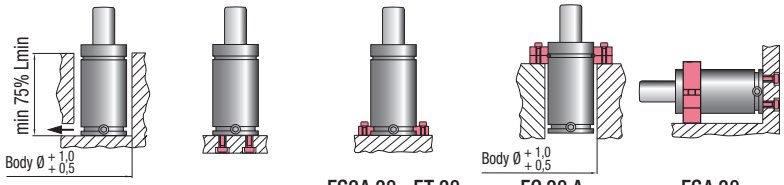

Drop-in | Bottom mount | FS2A 38 - FT 38 FS2B 38 - FTP 38 | FC 38 A FCQC 38 | FSA 38 FSD 38

HOW TO ORDER p. 133

INSTALLATION GUIDELINE p. 203

SPECIAL SPRINGS

SW

OSAS + OSM = OVER STROKE ACTIVE SAFETY + OVER STROKE MARKER

ACTIVE SAFETY

OSAS

USAS

OPAS

Il nuovo codice sarà fornito solo ad esaurimento del vecchio

The new code will be supplied only when the old will be out of stock

Der neue Kode wird geliefert nur wenn der alte nicht mehr im Lager ist

Le nouveau code sera fourni uniquement lorsque le vieux stock sera ecoulé

El nuevo código será suministrado sólo cuando el viejo está fuera de stock

O novo código irá ser fornecido apenas quando o antigo esgotar stock

* $F1_i$ = Isothermal end force at 100% Cu p. 18

** $F1_p$ = Polytrophic end force at 100% Cu

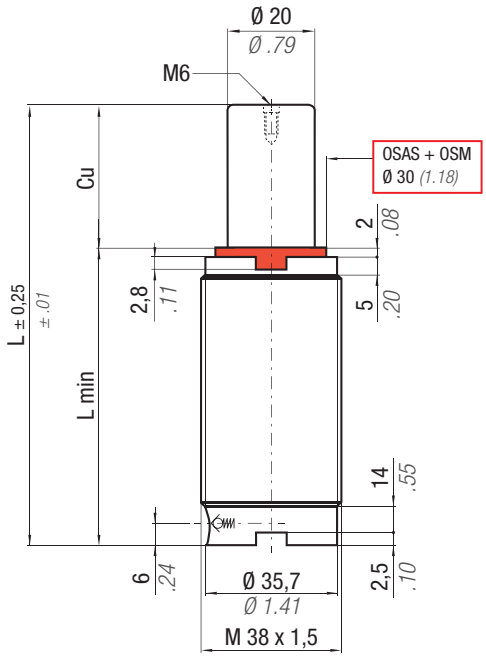

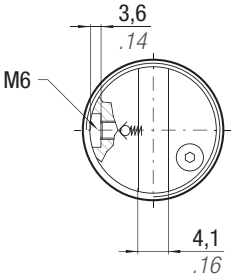

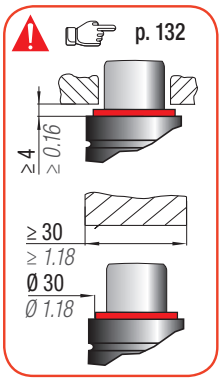

N2	°F 32 - 176	°C 0 - 80	ΔP	P max	P min	S	SPM	Max Speed	Maintenance kit
			± 0,33 %/°C	150 bar *2175 psi*	20 bar *290 psi*	3,14 cm² *0.487 in²*	~ 30 ÷ 100 (at 20°C)	1,8 m/s	39BMRV00500C

CODE PHASING OUT from 09/2009	NEW	Cu mm	Cu inch	L mm	L inch	L min mm	L min inch	F0 Initial force daN	F0 lb	$F1_i$ * End force daN	$F1_i$ lb	$F1_p$ ** End force daN	$F1_p$ lb	V0 cm³	V0 in³	~Kg	~lb	PED 2014/68/EU
HF 500 - 010 - A	HF 500 - 010 - C	10	0.39	70	2.76	60	2.36	470 ± 5%	1057	559	1257	619	1391	24,0	1.46	0,31	0.68	✓
HF 500 - 013 - A	HF 500 - 013 - C	13	0.51	75,7	2.98	62,7	2.47	150 bar 2175 psi		578	1300	647	1455	26,0	1.59	0,32	0.71	✓
HF 500 - 016 - A	HF 500 - 016 - C	16	0.63	82	3.23	66	2.60	+ 20 °C +68 °F		593	1333	669	1504	29,0	1.77	0,34	0.75	✓
-	HF 500 - 019 - C	19	0.75	88	3.46	69	2.72			606	1363	690	1550	31,0	1.89	0,35	0.77	✓
HF 500 - 025 - A	HF 500 - 025 - C	25	0.98	100	3.94	75	2.95			629	1415	724	1628	36,0	2.20	0,38	0.84	✓
HF 500 - 038 - A	HF 500 - 038 - C	38	1.50	126	4.96	88	3.46			664	1494	778	1750	48,0	2.93	0,44	0.97	✓
HF 500 - 050 - A	HF 500 - 050 - C	50	1.97	150	5.91	100	3.94			687	1544	813	1828	58,0	3.54	0,50	1.10	✓
HF 500 - 063 - A	HF 500 - 063 - C	63	2.48	176,5	6.95	113,5	4.47			702	1579	838	1883	70,0	4.27	0,56	1.23	✓
HF 500 - 080 - A	HF 500 - 080 - C	80	3.15	210	8.27	130	5.12			721	1620	867	1948	84,0	5.12	0,64	1.41	✓
HF 500 - 100 - A	HF 500 - 100 - C	100	3.94	250	9.84	150	5.91			734	1651	889	1998	101,0	6.16	0,73	1.61	✓
HF 500 - 125 - A	HF 500 - 125 - C	125	4.92	300	11.81	175	6.89			746	1678	908	2042	123,0	7.50	0,85	1.87	✓

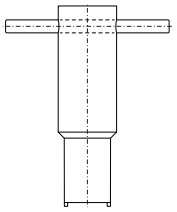

code: 58UT037A

p. 319

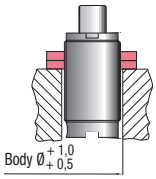

FCA 38

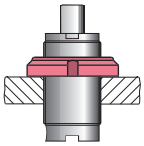

GM 38

HOW TO ORDER

p. 133

INSTALLATION GUIDELINE

p. 203

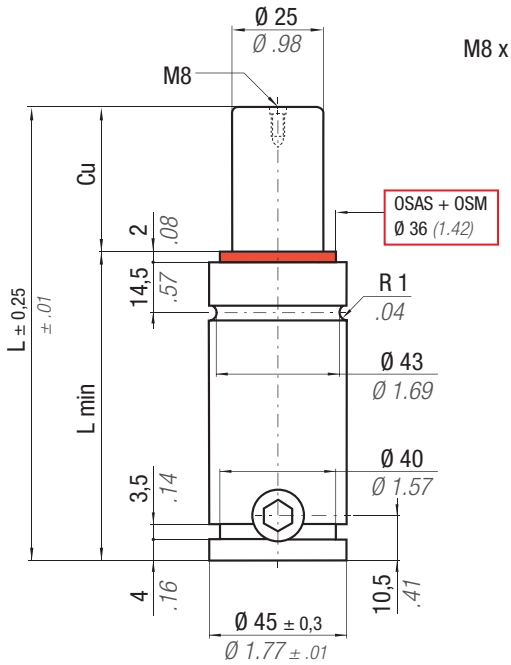

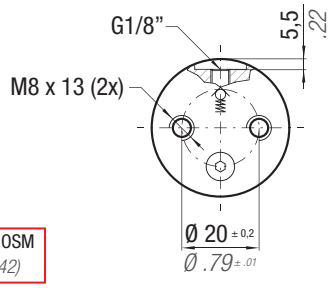

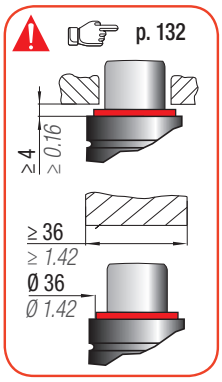

OSAS + OSM = OVER STROKE ACTIVE SAFETY + OVER STROKE MARKER

SW

ACTIVE SAFETY

OSAS

USAS

OPAS

Il nuovo codice sarà fornito solo ad esaurimento del vecchio

The new code will be supplied only when the old will be out of stock

Der neue Kode wird geliefert nur wenn der alte nicht mehr im Lager ist

Le nouveau code sera fourni uniquement lorsque le vieux stock sera ecoulé

El nuevo código será suministrado sólo cuando el viejo está fuera de stock

O novo código irá ser fornecido apenas quando o antigo esgotar stock

easy MANIFOLD p. 241

* $F1_i$ = Isothermal end force at 100% Cu p. 18

** $F1_p$ = Polytrophic end force at 100% Cu

N2	°F 32 - 176	°C 0 - 80	ΔP ± 0,33 %/°C	P max 150 bar 2175 psi	P min 20 bar 290 psi	S 4,91 cm² 0.761 in²	SPM ~ 20 ÷ 100 (at 20°C)	Max Speed 1,8 m/s	Maintenance kit See Tab below

CODE PHASING OUT from 01/2018	NEW	Cu mm	Cu inch	L mm	L inch	L min mm	L min inch	F0 Initial force daN	F0 lb	$F1_i$ * End force daN	$F1_i$ lb	$F1_p$ ** End force daN	$F1_p$ lb	V0 cm³	V0 in³	~Kg	~lb	PED 2014/68/EU
H 700 - 010 - C	H 700 - 010 - D	10	0.39	105	4.13	95	3.74	740 ± 5%	1664	945	2124	1074	2414	26,0	1.59	0,90	1.98	✓
H 700 - 013 - C	H 700 - 013 - D	13	0.50	110,7	4.35	97,7	3.85			985	2214	1134	2549	29,0	1.77	0,91	2.01	✓
H 700 - 025 - C	H 700 - 025 - D	25	0.98	135	5.31	110	4.33			1075	2417	1274	2864	45,0	2.75	1,00	2.20	✓
H 700 - 038 - C	H 700 - 038 - D	38	1.50	161	6.34	123	4.84			1132	2545	1363	3064	62,0	3.78	1,09	2.40	✓
H 700 - 050 - C	H 700 - 050 - D	50	1.97	185	7.28	135	5.31			1164	2617	1416	3183	77,0	4.70	1,17	2.58	✓
H 700 - 063 - C	H 700 - 063 - D	63	2.48	211,5	8.33	148,5	5.85	150 bar 2175 psi		1184	2662	1448	3255	94,0	5.73	1,26	2.78	✓
H 700 - 080 - C	H 700 - 080 - D	80	3.15	245	9.65	165	6.50			1211	2722	1491	3352	115,0	7.02	1,37	3.02	✓
H 700 - 100 - C	H 700 - 100 - D	100	3.94	285	11.22	185	7.28	+ 20 °C	+68 °F	1228	2761	1520	3417	140,0	8.54	1,51	3.33	✓
H 700 - 125 - C	H 700 - 125 - D	125	4.92	335	13.19	210	8.27			1244	2797	1546	3476	172,0	10.49	1,67	3.68	✓
H 700 - 160 - C	H 700 - 160 - D	160	6.30	405	15.94	245	9.65			1258	2828	1569	3527	217,0	13.24	1,91	4.21	✓

H
HF

Model (Cu)	Rev.	Maintenance kit
H 700 (010 ÷ 080)	C	39BMRV00750C
H 700 (100 ÷ 160)	C	39BMH00700C
H 700 (010 ÷ 160)	D	39BMH00700D

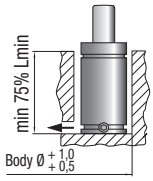

Drop-in

Bottom mount
FB 45 - FBA 45
FBB 45 - FBD 45

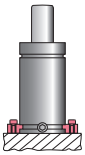

FS2A 45 - FT 45
FS2 45 - FTP 45

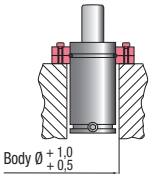

FC 45 A
FCQC 45

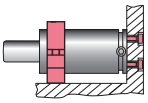

FSA 45
FSD 45 - FSE 45

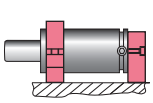

FSA 45 + R 50 A
FSE 45 + R 50 A

HOW TO ORDER p. 133

INSTALLATION GUIDELINE p. 203

H 1000

ISO 11901 - 4	VDI 3003 Blatt 4	B2 4008 (BMW)	075.90.65 (FCA)
39D 838 (VW)			

SPECIAL SPRINGS

SW

OSAS + OSM = OVER STROKE ACTIVE SAFETY + OVER STROKE MARKER

ACTIVE SAFETY

OSAS

USAS

OPAS

Il nuovo codice sarà fornito solo ad esaurimento del vecchio

The new code will be supplied only when the old will be out of stock

Der neue Kode wird geliefert nur wenn der alte nicht mehr im Lager ist

Le nouveau code sera fourni uniquement lorsque le vieux stock sera ecoulé

El nuevo código será suministrado sólo cuando el viejo está fuera de stock

O novo código irá ser fornecido apenas quando o antigo esgotar stock

easy MANIFOLD p. 241

* $F1_i$ = Isothermal end force at 100% Cu p. 18

** $F1_p$ = Polytrophic end force at 100% Cu

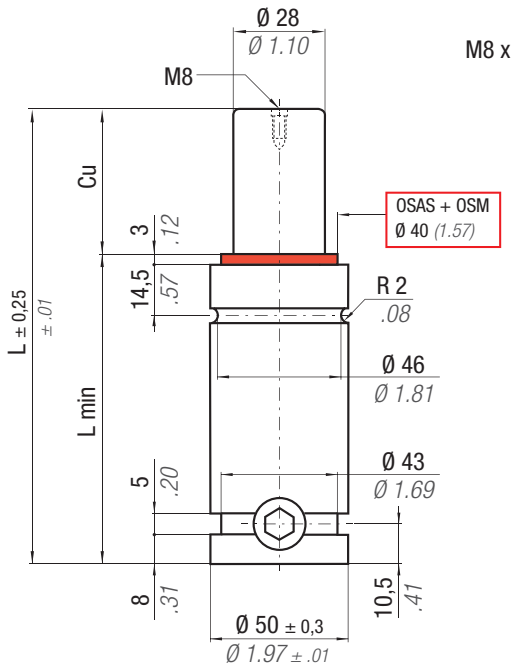

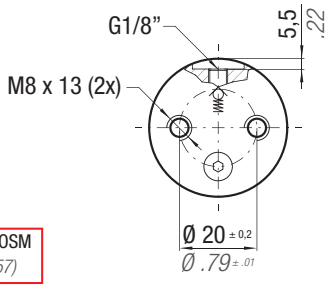

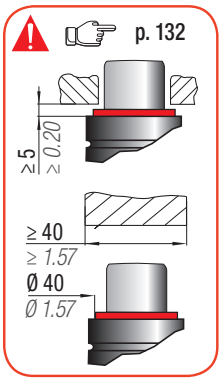

N_2	°F 32 - 176 / °C 0 - 80	ΔP	P max	P min	S	SPM	Max Speed	Maintenance kit
		± 0,33 %/°C	150 bar 2175 psi	20 bar 290 psi	6,15 cm² 0.953 in²	~ 15 ÷ 100 (at 20°C)	1,8 m/s	See Tab below

CODE PHASING OUT from 01/2018	NEW	Cu mm	Cu inch	L mm	L inch	L min mm	L min inch	F0 Initial force daN	F0 lb	$F1_i$ * End force daN	$F1_i$ lb	$F1_p$ ** End force daN	$F1_p$ lb	V0 cm³	V0 in³	~Kg	~lb	PED 2014/68/EU
H 1000 - 013 - C	H 1000 - 013 - D	13	0.50	120,7	4.74	107,7	4.24	920 ± 5% 150 bar 2175 psi + 20 °C +68 °F	2068	1181	2655	1340	3012	43,0	2.62	1,21	2,67	✓
H 1000 - 025 - C	H 1000 - 025 - D	25	0.98	145	5.71	120	4.72			1297	2916	1517	3410	62,0	3.78	1,32	2,91	✓
H 1000 - 038 - C	H 1000 - 038 - D	38	1.50	171	6.73	133	5.24			1374	3089	1638	3682	83,0	5.06	1,43	3,15	✓
H 1000 - 050 - C	H 1000 - 050 - D	50	1.97	195	7.68	145	5.71			1421	3195	1713	3851	101,0	6.16	1,53	3,37	✓
H 1000 - 063 - C	H 1000 - 063 - D	63	2.48	221	8.74	158	6.22			1458	3278	1772	3984	122,0	7.44	1,64	3,62	✓
H 1000 - 075 - C	H 1000 - 075 - D	75	2.95	245	9.65	170	6.69			1483	3334	1814	4078	141,0	8.60	1,74	3,84	✓
H 1000 - 080 - C	H 1000 - 080 - D	80	3.15	255	10.04	175	6.89			1492	3354	1828	4110	149,0	9.09	1,78	3,92	✓
H 1000 - 100 - C	H 1000 - 100 - D	100	3.94	295	11.61	195	7.68			1521	3419	1874	4214	180,0	10.98	1,96	4.32	✓
H 1000 - 125 - C	H 1000 - 125 - D	125	4.92	345	13.58	220	8.66			1546	3475	1915	4305	219,0	13.36	2,17	4.78	✓
H 1000 - 150 - C	H 1000 - 150 - D	150	5.91	395	15.55	245	9.65			1563	3515	1944	4371	258,0	15.74	2,38	5.25	✓
H 1000 - 160 - C	H 1000 - 160 - D	160	6.30	415	16.34	255	10.04			1569	3528	1954	4393	274,0	16.71	2,46	5.42	✓
H 1000 - 175 - C	H 1000 - 175 - D	175	6.89	445	17.52	270	10.63			1577	3545	1966	4421	298,0	18.18	2,59	5.71	✓
H 1000 - 200 - C	H 1000 - 200 - D	200	7.87	495	19.49	295	11.61			1587	3568	1984	4459	337,0	20.56	2,79	6.15	✓
H 1000 - 250 - C	H 1000 - 250 - D	250	9.84	595	23.43	345	13.58			1602	3602	2009	4515	416,0	25.38	3,21	7.08	✓
H 1000 - 300 - C	H 1000 - 300 - D	300	11.81	695	27.36	395	15.55			1613	3625	2026	4554	494,0	30.13	3,63	8.00	✓

Model (Cu)	Rev.	Maintenance kit
H 1000 (013 ÷ 080)	C	39BMRV01000C
H 1000 (100 ÷ 300)	C	39BMH01000D
H 1000 (013 ÷ 300)	D	39BMH01000D

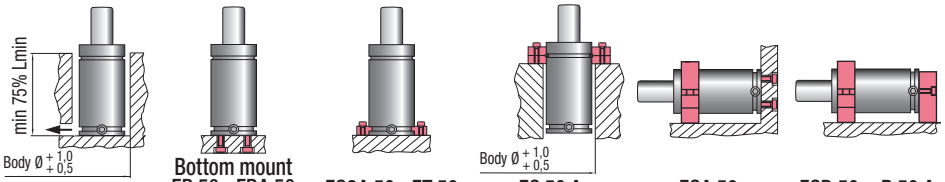

Drop-in

Bottom mount FB 50 - FBA 50 FBB 50 - FBD 50

FS2A 50 - FT 50 FS2 50 - FTP 50

FC 50 A FCQC 50

FSA 50 FSD 50

FSD 50 + R 50 A FSE 50 + R 50 A

HOW TO ORDER p. 133

INSTALLATION GUIDELINE p. 203

H 1500

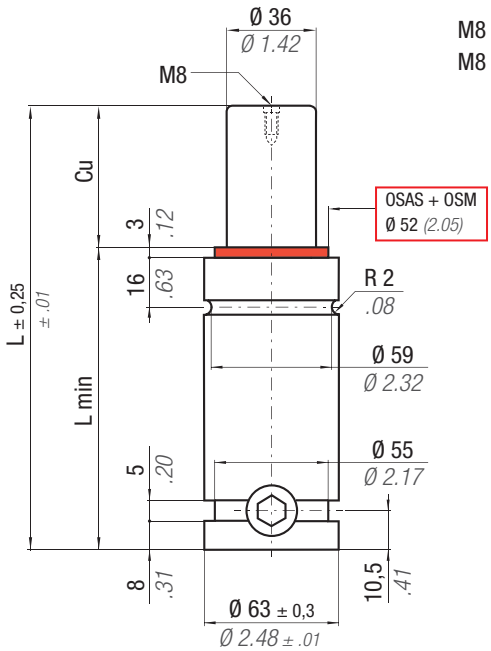

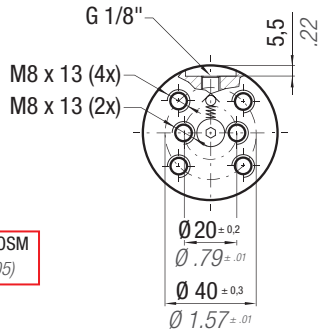

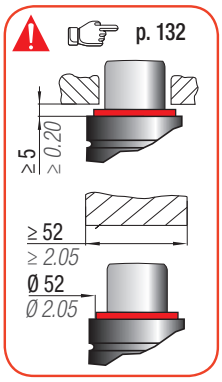

OSAS + OSM = OVER STROKE ACTIVE SAFETY + OVER STROKE MARKER

SW

easy MANIFOLD p. 241

ACTIVE SAFETY

OSAS

USAS

OPAS

* $F1_i$ = Isothermal end force at 100% Cu p. 18

** $F1_p$ = Polytrophic end force at 100% Cu

N_2	°F 32 - 176	°C 0 - 80	ΔP	P max	P min	S	SPM	Max Speed	Maintenance kit
			± 0,33 %/°C	150 bar / 2175 psi	20 bar / 290 psi	10,17 cm² / 1.576 in²	~ 15 ÷ 100 (at 20°C)	1,8 m/s	39BMH01500C Cu 13 ÷ 80 39BMH01500CH Cu 100 ÷ 300

CODE	Cu mm	Cu inch	L mm	L inch	L min mm	L min inch	F0 daN	F0 lb	$F1_i$ * daN	$F1_i$ * lb	$F1_p$ ** daN	$F1_p$ ** lb	V0 cm³	V0 in³	~Kg	~lb	PED 2014/68/EU
H 1500 - 013 - C	13	0,51	120,7	4.75	107,7	4.24	1530 ± 5%	3440	1954	4393	2217	4984	71,0	4.33	1,98	4.37	✓
H 1500 - 025 - C	25	0,98	145	5.71	120	4.72			2139	4809	2500	5620	103,0	6.28	2,13	4.70	✓
H 1500 - 038 - C	38	1,50	171	6.73	133	5.24			2261	5083	2691	6050	138,0	8.42	2,29	5.05	✓
H 1500 - 050 - C	50	1,97	195	7.68	145	5.71			2335	5249	2809	6315	170,0	10.37	2,44	5.38	✓
H 1500 - 063 - C	63	2,48	221	8.70	158	6.22			2392	5377	2900	6519	204,0	12.44	2,60	5.73	✓
H 1500 - 075 - C	75	2,95	245	9.65	170	6.69			2431	5465	2964	6663	236,0	14.40	2,75	6.06	✓
H 1500 - 080 - C	80	3,15	255	10.04	175	6.89			2445	5497	2986	6713	249,0	15.19	2,81	6.19	✓
H 1500 - 100 - C	100	3,94	295	11.61	195	7.68	150 bar / 2175 psi		2489	5595	3057	6872	302,0	18.42	3,03	6.68	✓
H 1500 - 125 - C	125	4,92	345	13.58	220	8.66			2527	5681	3119	7012	369,0	22.51	3,34	7.36	✓
H 1500 - 150 - C	150	5,91	395	15.55	245	9.65	+ 20 °C	+68 °F	2554	5742	3164	7113	435,0	26.54	3,64	8.02	✓
H 1500 - 160 - C	160	6,30	415	16.34	255	10.04			2563	5762	3178	7144	462,0	28.18	3,77	8.31	✓
H 1500 - 175 - C	175	6,89	445	17.52	270	10.63			2574	5787	3197	7187	501,0	30.56	3,95	8.71	✓
H 1500 - 200 - C	200	7,87	495	19.49	295	11.61			2590	5823	3223	7246	568,0	34.65	4,26	9.39	✓
H 1500 - 250 - C	250	9,84	595	23.43	345	13.58			2656	5971	3333	7493	684,0	41.72	4,99	11.00	✓
H 1500 - 300 - C	300	11,81	695	27.36	395	15.55			2731	6140	3458	7774	790,0	48.19	5,81	12.81	✓

H
HF

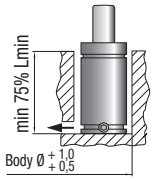

Drop-in

Bottom mount - FB 50 - FBA 50
FBD 50 - FB 63 - FBB 63 - FB 75
FBA 75 - FBB 75 - FBC 75 - FBD 75

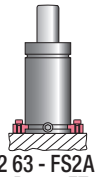

FS2 63 - FS2A 63
FS2B 63 - FT 63
FTP 63

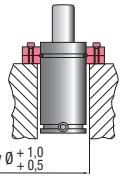

FC 63 A- FCQ 63 A
FCQC 63

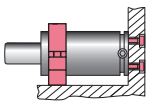

FSC 63
FSD 63

HOW TO ORDER p. 133

INSTALLATION GUIDELINE p. 203

H 2400

ISO 11901 - 4	VDI 3003 Blatt 4	B2 4008 (BMW)	075.90.65 (FCA)
39D 838 (VW)			

SPECIAL SPRINGS

SW

OSAS + OSM = OVER STROKE ACTIVE SAFETY + OVER STROKE MARKER

ACTIVE SAFETY

OSAS

USAS

OPAS

Il nuovo codice sarà fornito solo ad esaurimento del vecchio

The new code will be supplied only when the old will be out of stock

Der neue Kode wird geliefert nur wenn der alte nicht mehr im Lager ist

Le nouveau code sera fourni uniquement lorsque le vieux stock sera ecoulé

El nuevo código será suministrado sólo cuando el viejo está fuera de stock

O novo código irá ser fornecido apenas quando o antigo esgotar stock

easy MANIFOLD p. 241

* $F1_i$ = Isothermal end force at 100% Cu p. 18

** $F1_p$ = Polytrophic end force at 100% Cu

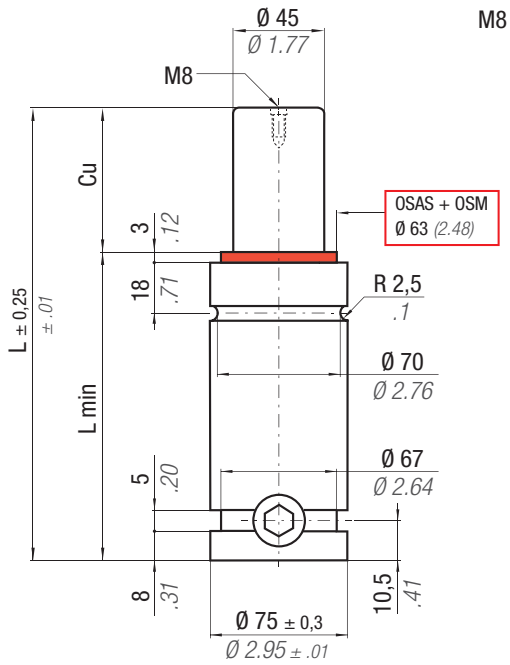

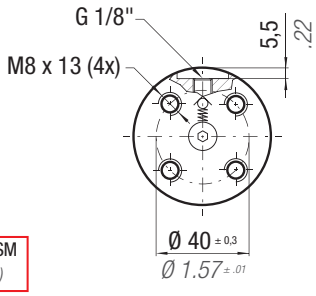

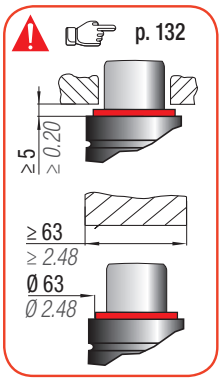

N_2	°F 32 - 176	°C 0 - 80	ΔP	P max	P min	S	SPM	Max Speed	Maintenance kit
			± 0,33 %/°C	150 bar / 2175 psi	20 bar / 290 psi	15,90 cm² / 2.465 in²	~ 15 ÷ 100 (at 20°C)	1,8 m/s	See Tab below

CODE PHASING OUT from 01/2018	NEW	Cu mm	Cu inch	L mm	L inch	L min mm	L min inch	F0 Initial force daN	F0 lb	$F1_i$ * End force daN	$F1_i$ lb	$F1_p$ ** End force daN	$F1_p$ lb	V0 cm³	V0 in³	~Kg	~lb	PED 2014/68/EU
H 2400 - 025 - C	H 2400 - 025 - D	25	0.98	160	6.30	135	5.31	2385 ± 5%	5362	3238	7279	3745	8419	176,0	10.74	3,34	7.36	✓
H 2400 - 038 - C	H 2400 - 038 - D	38	1.50	186	7.32	148	5.83			3442	7738	4062	9132	228,0	13.91	3,55	7.83	✓
H 2400 - 050 - C	H 2400 - 050 - D	50	1.97	210	8.27	160	6.30			3573	8032	4269	9597	276,0	16.84	3,75	8.27	✓
H 2400 - 063 - C	H 2400 - 063 - D	63	2.48	236	9.31	173	6.81			3678	8268	4436	9973	329,0	20.07	3,96	8.73	✓
H 2400 - 075 - C	H 2400 - 075 - D	75	2.95	260	10.24	185	7.28			3752	8435	4555	10240	377,0	23.00	4,15	9.15	✓
H 2400 - 080 - C	H 2400 - 080 - D	80	3.15	270	10.63	190	7.48			3778	8493	4597	10334	397,0	24.22	4,23	9.33	✓
H 2400 - 100 - C	H 2400 - 100 - D	100	3.94	310	12.20	210	8.27			3863	8684	4735	10645	478,0	29.16	4,51	9.94	✓
H 2400 - 125 - C	H 2400 - 125 - D	125	4.92	360	14.17	235	9.25	150 bar / 2175 psi		3939	8855	4859	10923	578,0	35.26	4,91	10.82	✓
H 2400 - 150 - C	H 2400 - 150 - D	150	5.91	410	16.14	260	10.24			3994	8979	4949	11126	679,0	41.42	5,32	11.73	✓
H 2400 - 160 - C	H 2400 - 160 - D	160	6.30	430	16.93	270	10.63	+ 20 °C	+68 °F	4012	9019	4979	11193	719,0	43.86	5,49	12.10	✓
H 2400 - 175 - C	H 2400 - 175 - D	175	6.89	460	18.11	285	11.22			4036	9073	5018	11281	779,0	47.52	5,73	12.63	✓
H 2400 - 200 - C	H 2400 - 200 - D	200	7.87	510	20.08	310	12.20			4068	9145	5072	11403	880,0	53.68	6,14	13.54	✓
H 2400 - 250 - C	H 2400 - 250 - D	250	9.84	610	24.02	360	14.17			4116	9253	5152	11582	1081,0	65.94	6,95	15.32	✓
H 2400 - 275 - C	H 2400 - 275 - D	275	10.83	660	25.98	385	15.16			4135	9296	5182	11650	1182,0	72.10	7,36	16.23	✓
H 2400 - 300 - C	H 2400 - 300 - D	300	11.81	710	27.95	410	16.14			4150	9330	5208	11707	1283,0	78.26	7,77	17.13	✓

Model (Cu)	Rev.	Maintenance kit
H 2400 (025 ÷ 080)	C	39BMRV02400C
H 2400 (025 ÷ 080)	D	39BMH02400D
H 2400 (100 ÷ 300)	C - D	39BMH02400DH

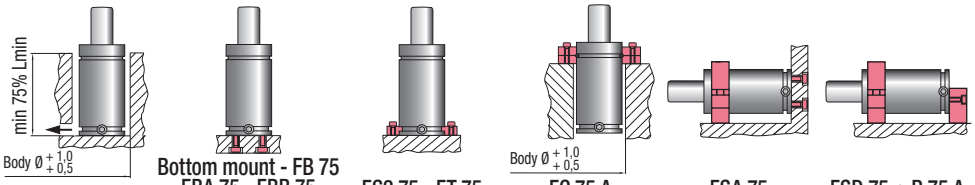

Drop-in

Bottom mount - FB 75
FBA 75 - FBB 75
FBC 75 - FBD 75

FS2 75 - FT 75
FS2A 75 - FTP 75

FC 75 A
FCQC 75

FSA 75
FSD 75 - FSE 75

FSD 75 + R 75 A
FSE 75 + R 75 A

HOW TO ORDER p. 133

INSTALLATION GUIDELINE p. 203

ISO 11901 - 4	VDI 3003 Blatt 4	B2 4008 (BMW)	075.90.65 (FCA)
39D 838 (VW)			

H 4200

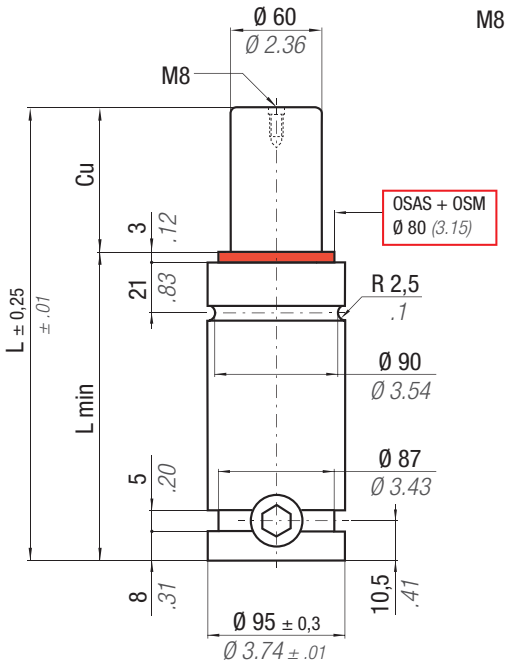

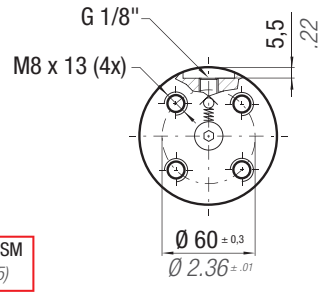

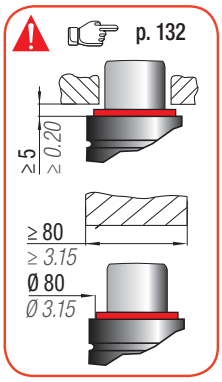

OSAS + OSM = OVER STROKE ACTIVE SAFETY + OVER STROKE MARKER

SW

Il nuovo codice sarà fornito solo ad esaurimento del vecchio

The new code will be supplied only when the old will be out of stock

Der neue Kode wird geliefert nur wenn der alte nicht mehr im Lager ist

Le nouveau code sera fourni uniquement lorsque le vieux stock sera ecoulé

El nuevo código será suministrado sólo cuando el viejo está fuera de stock

O novo código irá ser fornecido apenas quando o antigo esgotar stock

ACTIVE SAFETY

OSAS

USAS

OPAS

easy MANIFOLD p. 241

* $F1_i$ = Isothermal end force at 100% Cu p. 18

** $F1_p$ = Polytrophic end force at 100% Cu

N_2	°F 32 - 176 / °C 0 - 80	ΔP	P max	P min	S	SPM	Max Speed	Maintenance kit
		± 0,33 %/°C	150 bar *2175 psi*	20 bar *290 psi*	28,27 cm² *4.382 in²*	~ 15 ÷ 100 (at 20°C)	1,8 m/s	See Tab below

CODE PHASING OUT from 01/2018	NEW	Cu mm	Cu inch	L mm	L inch	L min mm	L min inch	F0 Initial force daN	F0 lb	$F1_i$ End force * daN	$F1_i$ lb	$F1_p$ End force ** daN	$F1_p$ lb	V0 cm³	V0 in³	~Kg	~lb	PED 2014/68/EU
H 4200 - 025 - C	H 4200 - 025 - D	25	0.98	170	6.69	145	5.71			5817	13077	6753	15181	303,0	18.48	5,76	12.70	✓
H 4200 - 038 - C	H 4200 - 038 - D	38	1.50	196	7.72	158	6.22			6236	14019	7407	16652	388,0	23.67	6,12	13.49	✓
H 4200 - 050 - C	H 4200 - 050 - D	50	1.97	220	8.66	170	6.69			6515	14646	7850	17648	467,0	28.49	6,45	14.22	✓
H 4200 - 063 - C	H 4200 - 063 - D	63	2.48	246	9.70	183	7.20			6744	15161	8217	18473	552,0	33.67	6,80	14.99	✓
H 4200 - 075 - C	H 4200 - 075 - D	75	2.95	270	10.63	195	7.68	4240	9532	6908	15530	8484	19073	631,0	38.49	7,13	15.72	✓
H 4200 - 080 - C	H 4200 - 080 - D	80	3.15	280	11.02	200	7.87	± 5%		6967	15662	8581	19291	663,0	40.44	7,27	16.03	✓
H 4200 - 100 - C	H 4200 - 100 - D	100	3.94	320	12.60	220	8.66			7160	16097	8898	20003	794,0	48.43	7,76	17.11	✓
H 4200 - 125 - C	H 4200 - 125 - D	125	4.92	370	14.57	245	9.65	150 bar *2175 psi*		7336	16491	9188	20656	958,0	58.44	8,45	18.63	✓
H 4200 - 150 - C	H 4200 - 150 - D	150	5.91	420	16.54	270	10.63			7465	16781	9403	21140	1122,0	68.44	9,13	20.13	✓
H 4200 - 160 - C	H 4200 - 160 - D	160	6.30	440	17.32	280	11.02	+ 20 °C *+68 °F*		7507	16877	9475	21300	1187,0	72.41	9,40	20.72	✓
H 4200 - 175 - C	H 4200 - 175 - D	175	6.89	470	18.50	295	11.61			7564	17004	9569	21512	1285,0	78.39	9,82	21.65	✓
H 4200 - 200 - C	H 4200 - 200 - D	200	7.87	520	20.47	320	12.60			7642	17179	9701	21808	1449,0	88.39	10,50	23.15	✓
H 4200 - 250 - C	H 4200 - 250 - D	250	9.84	620	24.41	370	14.57			7758	17440	9897	22248	1776,0	108.34	11,87	26.17	✓
H 4200 - 300 - C	H 4200 - 300 - D	300	11.81	720	28.35	420	16.54			7890	17737	10122	22755	2104,0	128.34	13,24	29.19	✓

H
HF

Model (Cu)	Rev.	Maintenance kit
H 4200 (025 ÷ 080)	C	39BMRV04200C
H 4200 (025 ÷ 080)	D	39BMH04200D
H 4200 (100 ÷ 300)	C - D	39BMH04200DH

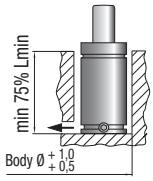

Drop-in

Bottom mount
FB 95 - FBA 95
FBB 95

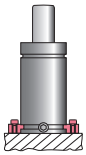

FS2 95 - FT 95
FS2A 95 - FTP 95

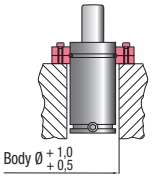

FC 95 A
FCQC 95

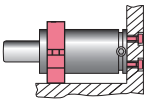

FSA 95
FSD 95 - FSE 95

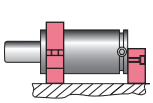

FSD 95 + R 95 A
FSE 95 + R 95 A

HOW TO ORDER p. 133

INSTALLATION GUIDELINE p. 203

H 6600

ISO 11901 - 4	VDI 3003 Blatt 4	B2 4008 (BMW)	075.90.65 (FCA)
39D 838 (VW)			

SPECIAL SPRINGS

SW

OSAS + OSM = OVER STROKE ACTIVE SAFETY + OVER STROKE MARKER

ACTIVE SAFETY

OSAS

USAS

OPAS

Il nuovo codice sarà fornito solo ad esaurimento del vecchio

The new code will be supplied only when the old will be out of stock

Der neue Kode wird geliefert nur wenn der alte nicht mehr im Lager ist

Le nouveau code sera fourni uniquement lorsque le vieux stock sera ecoulé

El nuevo código será suministrado sólo cuando el viejo está fuera de stock

O novo código irá ser fornecido apenas quando o antigo esgotar stock

easy MANIFOLD p. 241

* $F1_i$ = Isothermal end force at 100% Cu p. 18

** $F1_p$ = Polytrophic end force at 100% Cu

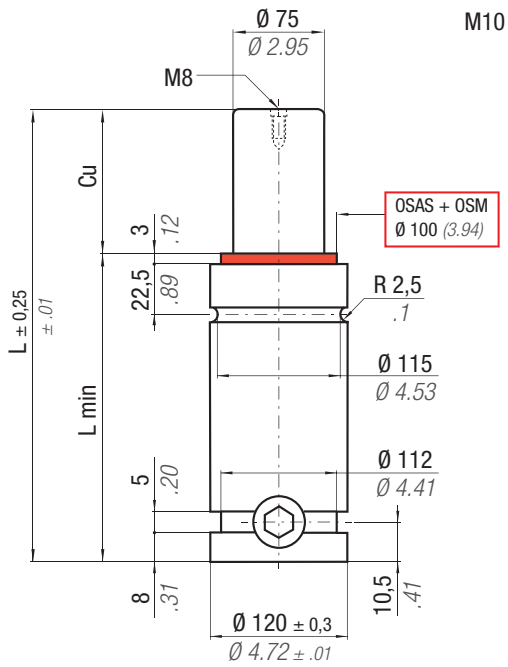

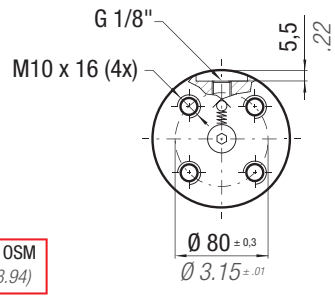

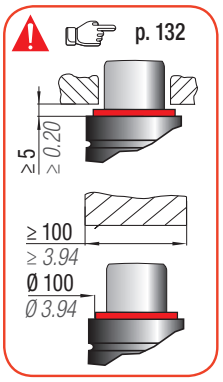

N_2	°F 32 - 176 / °C 0 - 80	ΔP	P max	P min	S	SPM	Max Speed	Maintenance kit
		± 0,33 %/°C	150 bar / 2175 psi	20 bar / 290 psi	44,18 cm² / 6.848 in²	~ 15 ÷ 100 (at 20°C)	1,8 m/s	See Tab below

CODE PHASING OUT from 01/2018	NEW	Cu mm	Cu inch	L mm	L inch	L min mm	L min inch	F0 Initial force daN	F0 lb	$F1_i$ * End force daN	$F1_i$ lb	$F1_p$ ** End force daN	$F1_p$ lb	V0 cm³	V0 in³	~Kg	~lb	PED 2014/68/EU
H 6600 - 025 - C	H 6600 - 025 - D	25	0.98	190	7.48	165	6.50	6630 ± 5%	14904	8601	19336	9806	22045	561,0	34.22	10,35	22.82	✓
H 6600 - 038 - C	H 6600 - 038 - D	38	1.50	216	8.50	178	7.01	150 bar	2175 psi	9183	20644	10696	24046	700,0	42.70	10,89	24.01	✓
H 6600 - 050 - C	H 6600 - 050 - D	50	1.97	240	9.45	190	7.48	+ 20 °C	+68 °F	9585	21548	11323	25455	828,0	50.51	11,37	25.07	✓
H 6600 - 063 - C	H 6600 - 063 - D	63	2.48	266	10.47	203	7.99			9924	22310	11857	26656	967,0	58.99	11,93	26.30	✓
H 6600 - 075 - C	H 6600 - 075 - D	75	2.95	290	11.42	215	8.46			10174	22872	12255	27550	1095,0	66.80	12,39	27.32	✓
H 6600 - 080 - C	H 6600 - 080 - D	80	3.15	300	11.81	220	8.66			10264	23074	12400	27876	1149,0	70.09	12,60	27.78	✓
H 6600 - 100 - C	H 6600 - 100 - D	100	3.94	340	13.39	240	9.45			10565	23751	12885	28967	1362,0	83.08	13,30	29.32	✓
H 6600 - 125 - C	H 6600 - 125 - D	125	4.92	390	15.35	265	10.43			10844	24378	13339	29987	1629,0	99.37	14,33	31.59	✓
H 6600 - 150 - C	H 6600 - 150 - D	150	5.91	440	17.32	290	11.42			11053	24848	13681	30756	1864,0	113.70	15,35	33.84	✓
H 6600 - 160 - C	H 6600 - 160 - D	160	6.30	460	18.11	300	11.81			11123	25005	13975	31417	2003,0	122.18	15,75	34.72	✓
H 6600 - 175 - C	H 6600 - 175 - D	175	6.89	490	19.29	315	12.40			11215	25212	13948	31356	2164,0	132.00	16,36	36.07	✓
H 6600 - 200 - C	H 6600 - 200 - D	200	7.87	540	21.26	340	13.39			11345	25505	14163	31840	2431,0	148.29	17,38	38.32	✓
H 6600 - 250 - C	H 6600 - 250 - D	250	9.84	640	25.20	390	15.35			11540	25943	14486	32566	2965,0	180.87	19,42	42.81	✓
H 6600 - 300 - C	H 6600 - 300 - D	300	11.81	740	29.13	440	17.32			11713	26332	14775	33216	3485,0	212.59	21,57	47.55	✓

Model (Cu)	Rev.	Maintenance kit
H 6600 (025 ÷ 080)	C	39BMRV06600C
H 6600 (025 ÷ 080)	D	39BMH06600D
H 6600 (100 ÷ 300)	C - D	39BMH06600DH

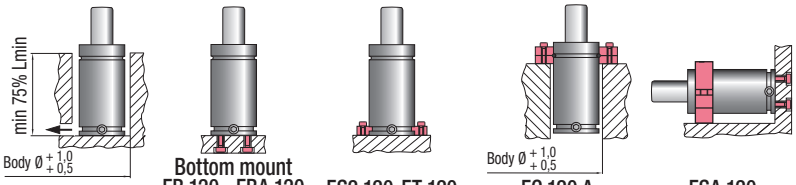

HOW TO ORDER p. 133

INSTALLATION GUIDELINE p. 203

ISO 11901 - 4	VDI 3003 Blatt 4	B2 4008 (BMW)	075.90.65 (FCA)
39D 838 (VW)			

H 9500

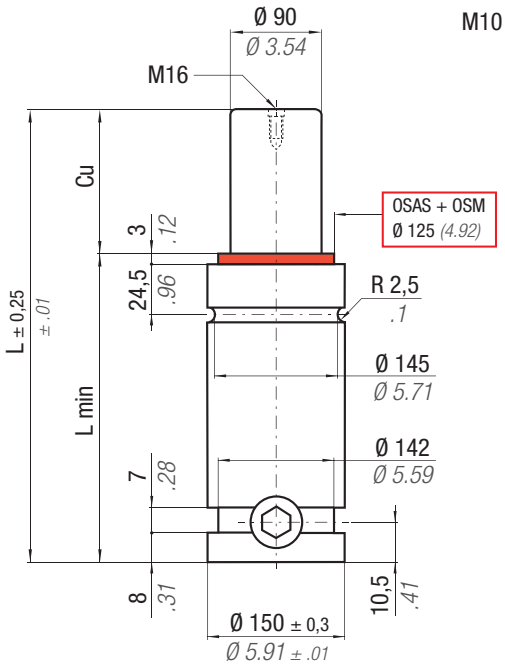

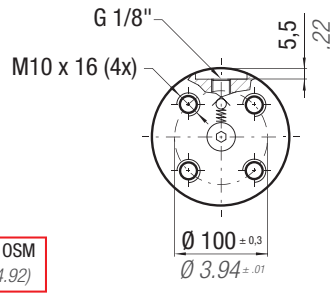

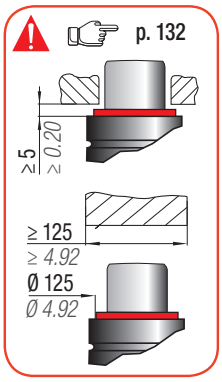

OSAS + OSM = OVER STROKE ACTIVE SAFETY + OVER STROKE MARKER

SW

easy MANIFOLD p. 241

ACTIVE SAFETY

OSAS

USAS

OPAS

* $F1_i$ = Isothermal end force at 100% Cu p. 18

** $F1_p$ = Polytrophic end force at 100% Cu

N2	°F 32 - 176	°C 0 - 80	ΔP	P max	P min	S	SPM	Max Speed	Maintenance kit
			± 0,33 %/°C	150 bar / 2175 psi	20 bar / 290 psi	63,62 cm² / 9.861 in²	~ 15 ÷ 80 (at 20°C)	1,8 m/s	39BMH09500C

CODE	Cu mm	Cu inch	L mm	L inch	L min mm	L min inch	F0 Initial force daN	F0 lb	$F1_i$ * End force daN	$F1_i$ lb	$F1_p$ ** End force daN	$F1_p$ lb	V0 cm³	V0 in³	~Kg	~lb	PED 2014/68/EU
H 9500 - 025 - C	25	0.98	205	8.07	180	7.09	9540 ± 5%	21446	12101	27204	13691	30779	879,0	53.62	18,00	39.68	✓
H 9500 - 038 - C	38	1.50	231	9.09	193	7.60			12866	28925	14853	33390	1089,0	66.43	18,82	41.49	✓
H 9500 - 050 - C	50	1.97	255	10.04	205	8.07			13398	30121	15673	35235	1282,0	78.20	19,58	43.17	✓
H 9500 - 063 - C	63	2.48	281	11.06	218	8.58			13848	31132	16376	36815	1492,0	91.01	20,41	45.00	✓
H 9500 - 075 - C	75	2.95	305	12.01	230	9.06			14181	31881	16901	37995	1685,0	102.79	21,17	46.67	✓
H 9500 - 080 - C	80	3.15	315	12.40	235	9.25			14302	32152	17092	38425	1766,0	107.73	21,49	47.38	✓
H 9500 - 100 - C	100	3.94	355	13.98	255	10.04			14705	33058	17735	39869	2088,0	127.37	22,76	50.18	✓
H 9500 - 125 - C	125	4.92	405	15.94	280	11.02			15080	33901	18337	41224	2491,0	151.95	24,35	53.68	✓
H 9500 - 150 - C	150	5.91	455	17.91	305	12.01			15361	34534	18793	42249	2894,0	176.53	25,94	57.19	✓
H 9500 - 160 - C	160	6.30	475	18.70	315	12.40			15455	34745	18946	42593	3055,0	186.36	26,58	58.60	✓
H 9500 - 175 - C	175	6.89	505	19.88	330	12.99			15581	35027	19150	43052	3297,0	201.12	27,53	60.69	✓
H 9500 - 200 - C	200	7.87	555	21.85	355	13.98			15756	35421	19437	43697	3700,0	225.70	29,12	64.20	✓
H 9500 - 250 - C	250	9.84	655	25.79	405	15.94			16020	36014	19870	44670	4506,0	274.87	32,30	71.21	✓
H 9500 - 300 - C	300	11.81	755	29.72	455	17.91			16208	36437	20181	45368	5312,0	324.03	35,47	78.20	✓

H
HF

150 bar / 2175 psi

+ 20 °C +68 °F

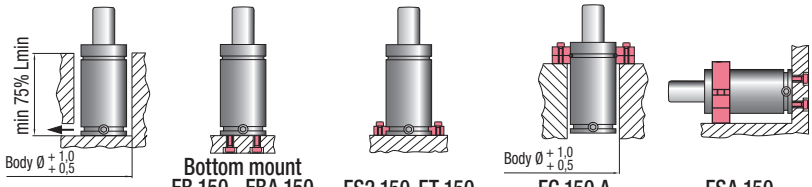

Drop-in

Bottom mount
FB 150 - FBA 150
FBB 150 - FBD 150

FS2 150-FT 150
FS2A 150-FTP 150

Body Ø + 1,0 + 0,5
FC 150 A
FCQC 150

FSA 150
FSD 150

HOW TO ORDER p. 133

INSTALLATION GUIDELINE p. 203

H 18500

SPECIAL SPRINGS

SW

ACTIVE SAFETY

OSAS

USAS

OPAS

OSAS + OSM = OVER STROKE ACTIVE SAFETY + OVER STROKE MARKER

Il nuovo codice sarà fornito solo ad esaurimento del vecchio

The new code will be supplied only when the old will be out of stock

Der neue Kode wird geliefert nur wenn der alte nicht mehr im Lager ist

Le nouveau code sera fourni uniquement lorsque le vieux stock sera ecoulé

El nuevo código será suministrado sólo cuando el viejo está fuera de stock

O novo código irá ser fornecido apenas quando o antigo esgotar stock

easy MANIFOLD p. 241

* $F1_i$ = Isothermal end force at 100% Cu p. 18

** $F1_p$ = Polytrophic end force at 100% Cu

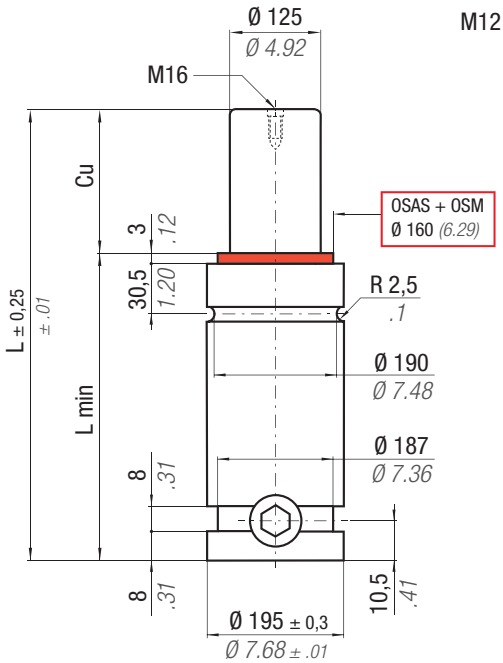

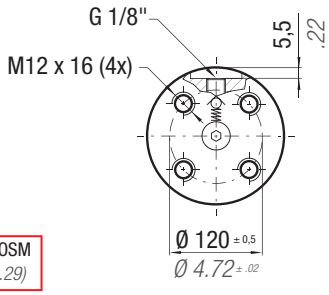

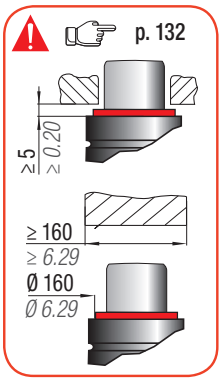

N_2	°F 32 - 176	°C 0 - 80	ΔP	P max	P min	S	SPM	Max Speed	Maintenance kit
			± 0,33 %/°C	150 bar *2175 psi*	20 bar *290 psi*	122,70 cm² *19.019 in²*	~ 10 ÷ 70 (at 20°C)	1,8 m/s	39BMH18500C

CODE PHASING OUT from 01/2014	NEW	Cu mm	Cu inch	L mm	L inch	L min mm	L min inch	F0 Initial force daN	F0 lb	$F1_i$ * End force daN	$F1_i$ lb	$F1_p$ ** End force daN	$F1_p$ lb	V0 cm³	V0 in³	~Kg	~lb	PED 2014/68/EU
H 18500 - 025 - A	H 18500 - 025 - C	25	0.98	210	8.27	185	7.28	18400 ± 5%	41363	23812	53532	27117	60961	1577,0	96.20	31,06	68.48	✓
H 18500 - 038 - A	H 18500 - 038 - C	38	1.50	236	9.29	198	7.80			25529	57391	29743	66865	1941,0	118.40	32,53	71.72	✓
H 18500 - 050 - A	H 18500 - 050 - C	50	1.97	260	10.24	210	8.27			26751	60139	31649	71150	2276,0	138.84	33,89	74.71	✓
H 18500 - 063 - A	H 18500 - 063 - C	63	2.50	286	11.30	223	8.80			27804	62506	33313	74891	2640,0	161.04	35,36	77.96	✓
H 18500 - 080 - A	H 18500 - 080 - C	80	3.15	320	12.60	240	9.45			28884	64934	35042	78778	3115,0	190.02	37,28	82.19	✓
H 18500 - 100 - A	H 18500 - 100 - C	100	3.94	360	14.17	260	10.24	150 bar *2175 psi*		29859	67126	36620	82325	3674,0	224.11	39,54	87.17	✓
H 18500 - 125 - A	H 18500 - 125 - C	125	4.92	410	16.14	285	11.22			30778	69192	38126	85711	4373,0	266.75	42,37	93.41	✓
-	H 18500 - 150 - C	150	5.91	460	18.11	310	12.20			31478	70765	39281	88307	5072,0	309.39	45,19	99.63	✓
H 18500 - 160 - A	H 18500 - 160 - C	160	6.30	480	18.90	320	12.60	+ 20 °C	+68 °F	31713	71294	39671	89184	5352,0	326.47	46,33	102.14	✓
H 18500 - 200 - A	H 18500 - 200 - C	200	7.87	560	22.05	360	14.17			32471	72998	40935	92026	6470,0	394.67	50,85	112.11	✓
H 18500 - 250 - A	H 18500 - 250 - C	250	9.84	660	25.98	410	16.14			33143	74508	42063	94561	7868,0	479.95	56,51	124.58	✓
H 18500 - 300 - A	H 18500 - 300 - C	300	11.81	760	29.92	460	18.11			33627	75597	42881	96400	9266,0	565.23	62,16	137.04	✓

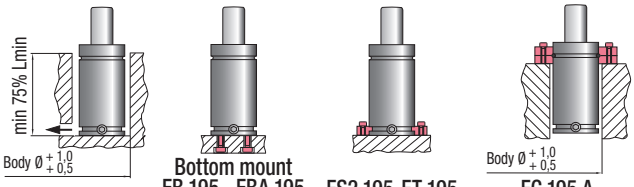

HOW TO ORDER p. 133

INSTALLATION GUIDELINE p. 203

THIS PAGE IS INTENTIONALLY LEFT BLANK

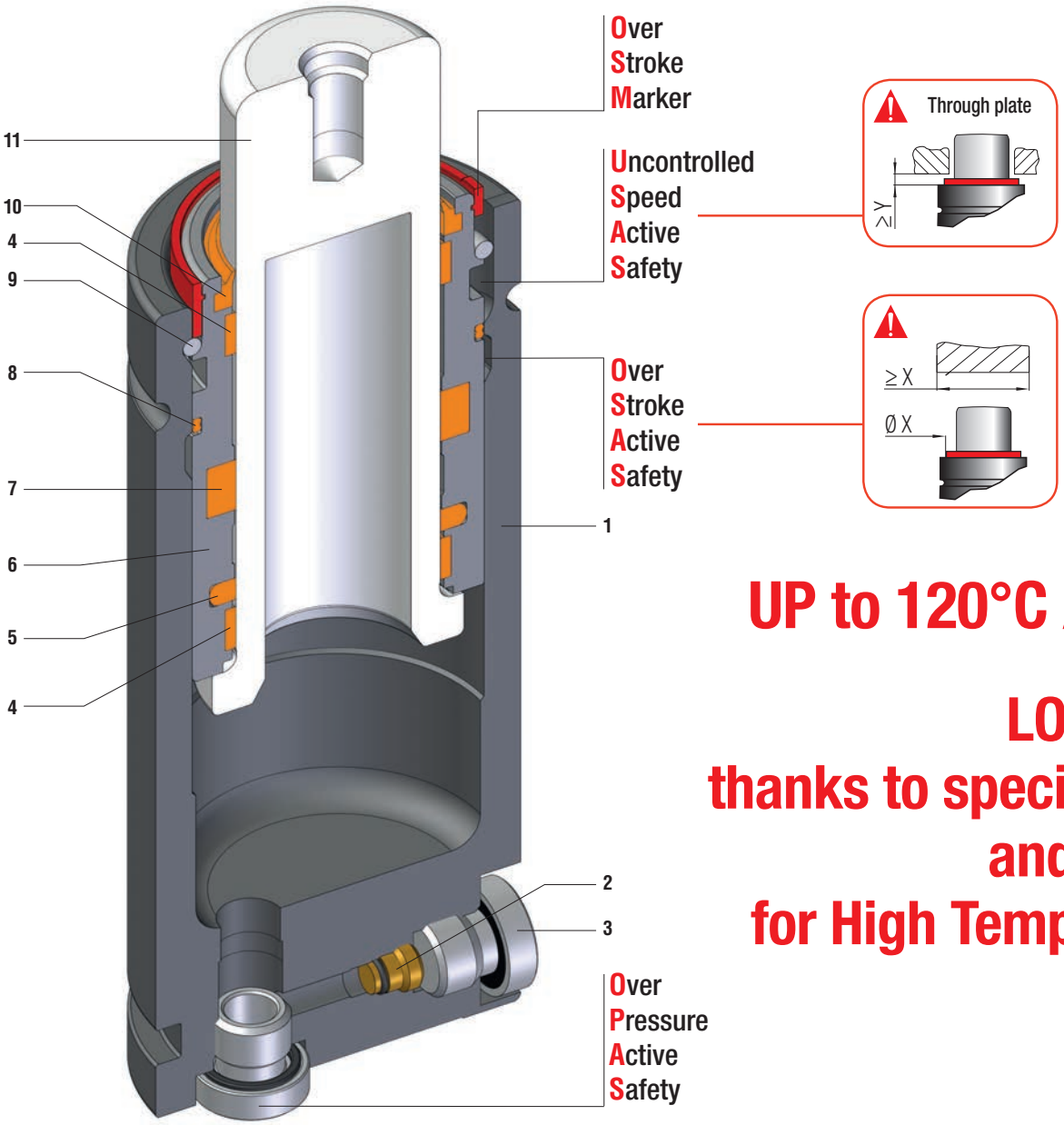

UP to 120°C / *248°F*

LONG LIFE thanks to special seals and guides for High Temperature

Per alta temperatura, ISO standard, forza potenziata, - For high temperature, ISO standard, high force
Für Hochtemperatur, ISO Standard, erhöhte Kraft - Pour haute température, standard ISO, force majorée
Para alta temperatura, ISO standard, fuerza potenciada - De alta temperatura, norma ISO, força permitida

SEALING	ROD SEAL
DESIGN	BUSH - BODY DESIGN

1	Body	**5**	Rod seal*	**9**	Retaining ring
2	Valve	**6**	Bush	**10**	Rod wiper*
3	Plug	**7**	Rod seal*	**11**	Rod (nitrited superfinished)
4	Guide ring*	**8**	Dual ring seal*		

*special design and materials for high temperature.

RANGE CHART

Model	Body Ø		Stroke Cu		Initial force F0		HIGH TEMPERATURE 100°C	HIGH TEMPERATURE 120°C	OSAS	USAS	OPAS	SKUDO	SW
	mm	*inch*	mm	*inch*	daN	*lb*							
HT 500 T1	38	*1.50*	10 - 125	*0.39 - 4.92*	495	*1113*	✓	-	✓	✓	✓	-	✓
HT 700 T1	45	*1.77*	10 - 200	*0.39 - 7.87*	775	*1742*	✓	-	✓	✓	✓	-	✓
HT 1000 T1	50	*1.97*	13 - 300	*0.51 - 11.81*	970	*2181*	✓	-	✓	✓	✓	-	✓
HT 500 T2	38	*1.50*	10 - 125	*0.39 - 4.92*	480	*1079*	-	✓	✓	✓	✓	-	✓
HT 700 T2	45	*1.77*	10 - 200	*0.39 - 7.87*	750	*1686*	-	✓	✓	✓	✓	-	✓
HT 1000 T2	50	*1.97*	13 - 300	*0.51 - 11.81*	940	*2113*	-	✓	✓	✓	✓	-	✓

✓ Built-in as standard ✓ Optional upon request

T1

Temperatura di esercizio
Working temperature
Betriebstemperatur
Température de fonctionnement
Temperatura de funcionamiento
Temperatura de funcionamento

80 ÷ 100°C
176 ÷ 212°F

P max

125 bar
1813 psi

T2

Temperatura di esercizio
Working temperature
Betriebstemperatur
Température de fonctionnement
Temperatura de funcionamiento
Temperatura de funcionamento

100 ÷ 120°C
212 ÷ 248°F

P max

115 bar
1668 psi

HOW TO ORDER

Series — Revision code

Model — **HT500-010-A-T1-E-W** — Version

Stroke — Working temperature

HT

Available versions

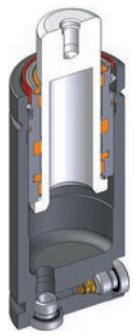

HT 500-010-A-T1/T2
Standard code

Self contained

HT 500-010-A-T1/T2-W
Add "-W" to standard code

Self contained
+
Secondary wiper

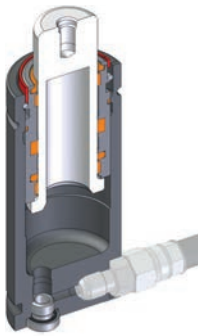

HT 500-010-A-T1/T2-N
Add "-N" to standard code

Linkable

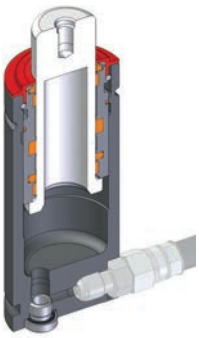

HT 500-010-A-T1/T2-N-W
Add "-N-W" to standard code

Linkable
Secondary wiper

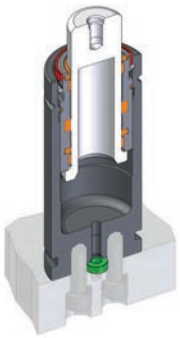

HT 500-010-A-T1/T2-E
Add "-E" to standard code

Easy Manifold

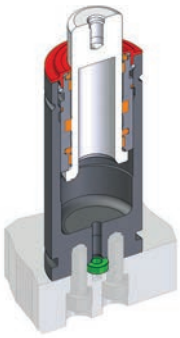

HT 500-010-A-T1/T2-E-W
Add "-E-W" to standard code

Easy Manifold
+
Secondary wiper

HT 500 T1
80 ÷ 100°C / *176 ÷ 212°F*

SPECIAL SPRINGS

SW

HIGH TEMP.

ACTIVE SAFETY

OSAS

USAS

OPAS

OSAS + OSM = OVER STROKE ACTIVE SAFETY + OVER STROKE MARKER

easy MANIFOLD p. 241

*** $F1_i$ =** Isothermal end force at 100% Cu p. 18

**** $F1_p$ =** Polytrophic end force at 100% Cu

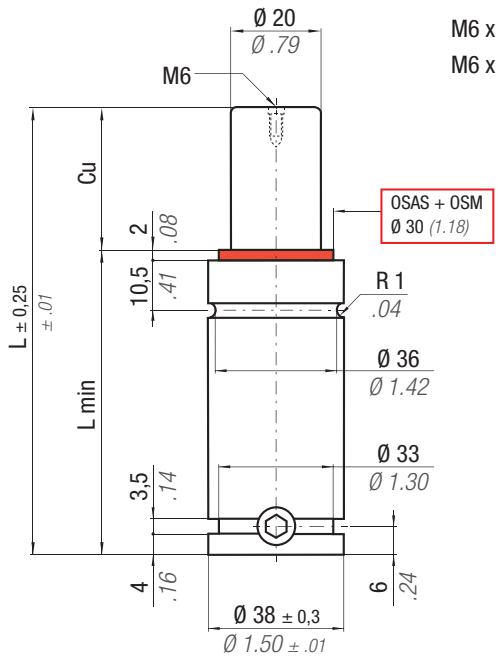

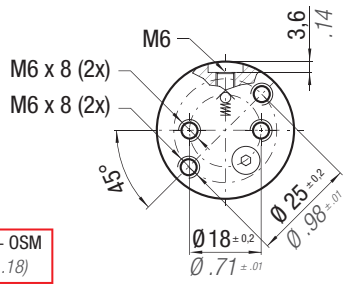

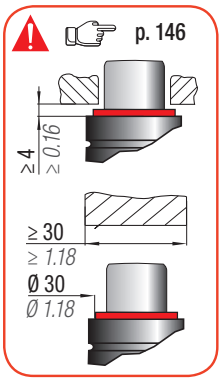

N_2	°F 176 - 212	°C 80 - 100	ΔP	P max	P min	S	SPM	Max Speed	Maintenance kit
			± 0,33 %/°C	125 bar *1813 psi*	20 bar *290 psi*	3,14 cm² *0.478in²*	~ 5 ÷ 20	1 m/s	39BMMMGS00038B

CODE	Cu mm	Cu *inch*	L mm	L *inch*	L min mm	L min *inch*	Fo Initial force daN	Fo *lb*	$F1_i$ * End force daN	$F1_i$ *lb*	$F1_p$ ** End force daN	$F1_p$ *lb*	Vo cm³	Vo *in³*	~Kg	*~lb*	PED 2014/68/EU
HT 500 - 010 - A - T1	10	*0.39*	70	*2.76*	60	*2.36*			653	*1469*	756	*1699*	13,5	*0.82*	0,31	*0.68*	✓
HT 500 - 013 - A - T1	13	*0.51*	75,7	*2.98*	62,7	*2.47*			678	*1525*	796	*1789*	15,8	*0.96*	0,32	*0.71*	✓
HT 500 - 016 - A - T1	16	*0.63*	82	*3.23*	66	*2.60*	390	*877*	692	*1557*	819	*1841*	18,6	*1.13*	0,34	*0.75*	✓
HT 500 - 019 - A - T1	19	*0.75*	88	*3.46*	69	*2.72*	+ 20°C	*+ 68°F*	689	*1550*	814	*1830*	21,2	*1.29*	0,35	*0.77*	✓
HT 500 - 025 - A - T1	25	*0.98*	100	*3.94*	75	*2.95*			727	*1634*	876	*1970*	26,4	*1.61*	0,38	*0.84*	✓
HT 500 - 038 - A - T1	38	*1.50*	126	*4.96*	88	*3.46*			755	*1697*	923	*2075*	37,6	*2.29*	0,44	*0.97*	✓
HT 500 - 050 - A - T1	50	*1.97*	150	*5.91*	100	*3.94*	495	*1113*	770	*1731*	949	*2133*	47,9	*2.92*	0,50	*1.10*	✓
HT 500 - 063 - A - T1	63	*2.48*	176,5	*6.95*	113,5	*4.47*	+ 100°C	*+ 212°F*	778	*1750*	963	*2165*	59,4	*3.62*	0,56	*1.23*	✓
HT 500 - 080 - A - T1	80	*3.15*	210	*8.27*	130	*5.12*			791	*1777*	984	*2212*	73,7	*4.50*	0,64	*1.41*	✓
HT 500 - 100 - A - T1	100	*3.94*	250	*9.84*	150	*5.91*			798	*1794*	997	*2242*	90,9	*5.54*	0,73	*1.61*	✓
HT 500 - 125 - A - T1	125	*4.92*	300	*11.81*	175	*6.89*			805	*1809*	1008	*2267*	112,4	*6.86*	0,85	*1.87*	✓

End force at 100°C / *212°F*

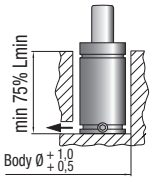

Drop-in

Bottom mount

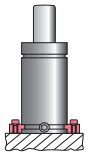

FS2A 38 - FT 38
FS2B 38 - FTP 38

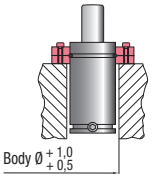

FC 38 A
FCQC 38

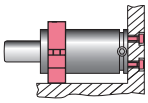

FSA 38
FSD 38

HOW TO ORDER p. 147

INSTALLATION GUIDELINE p. 203

HT 500 T2

100 ÷ 120°C / *212 ÷ 248°F*

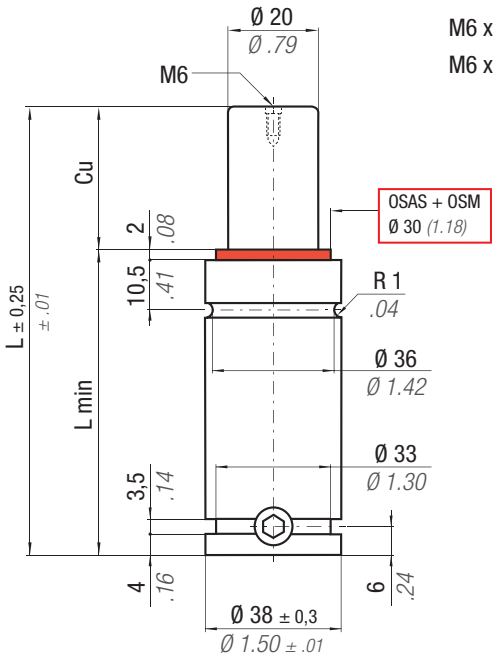

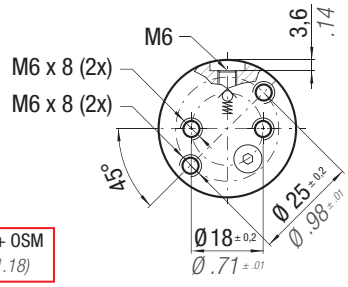

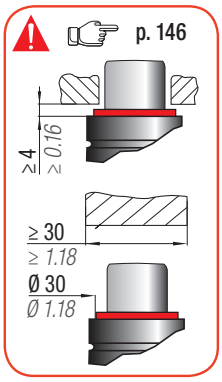

OSAS + OSM = OVER STROKE ACTIVE SAFETY + OVER STROKE MARKER

easy MANIFOLD p. 241

* $F1_i$ = Isothermal end force at 100% Cu p. 18

** $F1_p$ = Polytrophic end force at 100% Cu

SW

HIGH TEMP.

ACTIVE SAFETY

OSAS

USAS

OPAS

N_2	°F 212 - 248	°C 100 - 120	ΔP	P max	P min	S	SPM	Max Speed	Maintenance kit
			± 0,33 %/°C	115 bar *1668 psi*	20 bar *290 psi*	3,14 cm² *0.487 in²*	~ 5 ÷ 20	1 m/s	39BMMMGS00038B

CODE	Cu mm	Cu *inch*	L mm	L *inch*	L min mm	L min *inch*	Fo Initial force daN	Fo *lb*	$F1_i$ * End force daN	$F1_i$ *lb*	$F1_p$ ** End force daN	$F1_p$ *lb*	Vo cm³	Vo *in³*	~Kg	*~lb*	PED 2014/68/EU
HT 500 - 010 - A - T2	10	*0.39*	70	*2.76*	60	*2.36*			630	*1415*	734	*1650*	13,5	*0.82*	0,31	*0.68*	✓
HT 500 - 013 - A - T2	13	*0.51*	75,7	*2.98*	62,7	*2.47*			653	*1468*	773	*1738*	15,8	*0.96*	0,32	*0.71*	✓
HT 500 - 016 - A - T2	16	*0.63*	82	*3.23*	66	*2.60*	360	*809*	666	*1498*	795	*1788*	18,6	*1.13*	0,34	*0.75*	✓
HT 500 - 019 - A - T2	19	*0.75*	88	*3.46*	69	*2.72*	+ 20°C		664	*1492*	791	*1777*	21,2	*1.29*	0,35	*0.77*	✓
HT 500 - 025 - A - T2	25	*0.98*	100	*3.94*	75	*2.95*	*+ 68°F*		699	*1572*	851	*1913*	26,4	*1.61*	0,38	*0.84*	✓
HT 500 - 038 - A - T2	38	*1.50*	126	*4.96*	88	*3.46*			725	*1631*	896	*2015*	37,6	*2.29*	0,44	*0.97*	✓
HT 500 - 050 - A - T2	50	*1.97*	150	*5.91*	100	*3.94*	480	*1079*	740	*1663*	921	*2072*	47,9	*2.92*	0,50	*1.10*	✓
HT 500 - 063 - A - T2	63	*2.48*	176,5	*6.95*	113,5	*4.47*	+ 120°C		748	*1681*	936	*2103*	59,4	*3.62*	0,56	*1.23*	✓
HT 500 - 080 - A - T2	80	*3.15*	210	*8.27*	130	*5.12*	*+ 248°F*		759	*1707*	956	*2149*	73,7	*4.50*	0,64	*1.41*	✓
HT 500 - 100 - A - T2	100	*3.94*	250	*9.84*	150	*5.91*			766	*1723*	969	*2177*	90,9	*5.54*	0,73	*1.61*	✓
HT 500 - 125 - A - T2	125	*4.92*	300	*11.81*	175	*6.89*			772	*1736*	979	*2202*	112,4	*6.86*	0,85	*1.87*	✓

End force at 120°C / *248°F*

HT

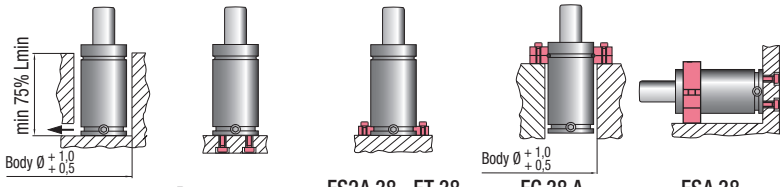

Drop-in | Bottom mount | FS2A 38 - FT 38 FS2B 38 - FTP 38 | FC 38 A FCQC 38 | FSA 38 FSD 38

HOW TO ORDER p. 147

INSTALLATION GUIDELINE p. 203

HT 700 T1

80 ÷ 100°C / *176 ÷ 212°F*

SPECIAL SPRINGS

SW

HIGH TEMP.

ACTIVE SAFETY

OSAS

USAS

OPAS

OSAS + OSM = OVER STROKE ACTIVE SAFETY + OVER STROKE MARKER

easy MANIFOLD p. 241

*** $F1_i$ =** Isothermal end force at 100% Cu p. 18

**** $F1_p$ =** Polytrophic end force at 100% Cu

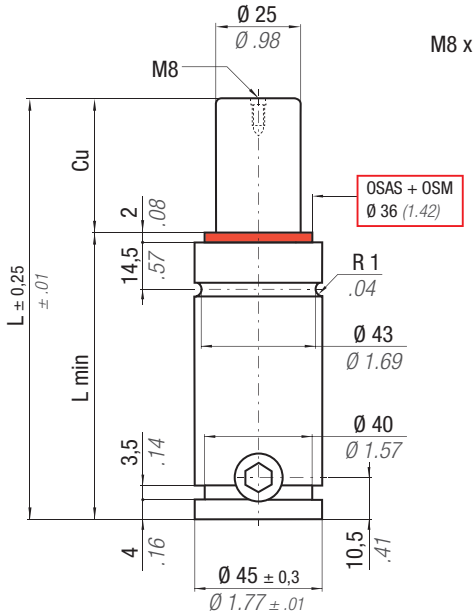

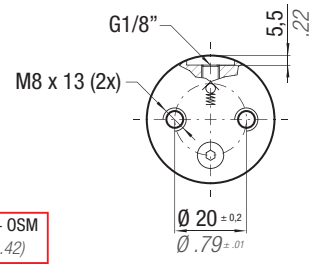

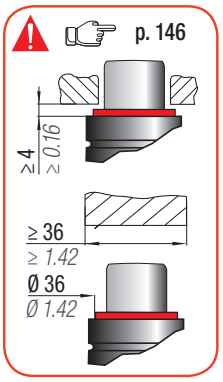

N_2	°F 176 - 212	°C 80 - 100	ΔP	P max	P min	S	SPM	Max Speed	Maintenance kit
			± 0,33 %/°C	125 bar *1813 psi*	20 bar *290 psi*	4,91 cm² *0.761 in²*	~ 5 ÷ 20	1 m/s	39BMMMGS00045B

CODE	Cu mm	Cu *inch*	L mm	L *inch*	L min mm	L min *inch*	Fo Initial force daN	Fo *lb*	$F1_i$ * End force daN	$F1_i$ *lb*	$F1_p$ ** End force daN	$F1_p$ *lb*	Vo cm³	Vo *in³*	~Kg	*~lb*	PED 2014/68/EU
HT 700 - 010 - A - T1	10	*0.39*	105	*4.13*	95	*3.74*			988	*2221*	1128	*2536*	25,9	*1.58*	0,90	*1.98*	✓
HT 700 - 013 - A - T1	13	*0.50*	110,7	*4.35*	97,7	*3.85*			1027	*2309*	1191	*2677*	29,4	*1.79*	0,91	*2.01*	✓
HT 700 - 025 - A - T1	25	*0.98*	135	*5.31*	110	*4.33*	615	*1383*	1117	*2511*	1337	*3006*	45,0	*2.75*	1,00	*2.20*	✓
HT 700 - 038 - A - T1	38	*1.50*	161	*6.34*	123	*4.84*	+ 20°C	*+ 68°F*	1172	*2635*	1430	*3214*	61,5	*3.75*	1,09	*2.40*	✓
HT 700 - 050 - A - T1	50	*1.97*	185	*7.28*	135	*5.31*			1204	*2707*	1484	*3336*	76,8	*4.68*	1,17	*2.58*	✓
HT 700 - 063 - A - T1	63	*2.48*	211,5	*8.33*	148,5	*5.85*			1224	*2752*	1519	*3414*	93,9	*5.73*	1,26	*2.78*	✓
HT 700 - 080 - A - T1	80	*3.15*	245	*9.65*	165	*6.50*	775	*1742*	1250	*2809*	1562	*3512*	115,0	*7.02*	1,37	*3.02*	✓
HT 700 - 100 - A - T1	100	*3.94*	285	*11.22*	185	*7.28*	+ 100°C	*+ 212°F*	1267	*2849*	1593	*3581*	140,4	*8.56*	1,51	*3.33*	✓
HT 700 - 125 - A - T1	125	*4.92*	335	*13.19*	210	*8.27*			1282	*2882*	1619	*3639*	172,2	*10.50*	1,67	*3.68*	✓
HT 700 - 160 - A - T1	160	*6.30*	405	*15.94*	245	*9.65*			1296	*2913*	1643	*3693*	216,8	*13.22*	1,91	*4.21*	✓
HT 700 - 200 - A - T1	200	*7.87*	485	*19.09*	285	*11.22*			1306	*2936*	1661	*3734*	267,7	*16.33*	2,20	*4.85*	✓

End force at 100°C / *212°F*

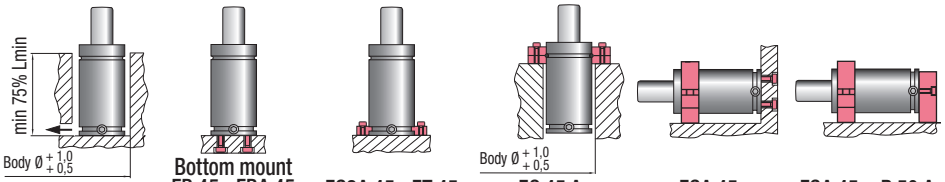

Drop-in | Bottom mount FB 45 - FBA 45 FBB 45 - FBD 45 | FS2A 45 - FT 45 FS2 45 - FTP 45 | FC 45 A FCQC 45 | FSA 45 FSD 45 - FSE 45 | FSA 45 + R 50 A FSE 45 + R 50 A

HOW TO ORDER p. 147

INSTALLATION GUIDELINE p. 203

HT 700 T2

100 ÷ 120°C / *212 ÷ 248°F*

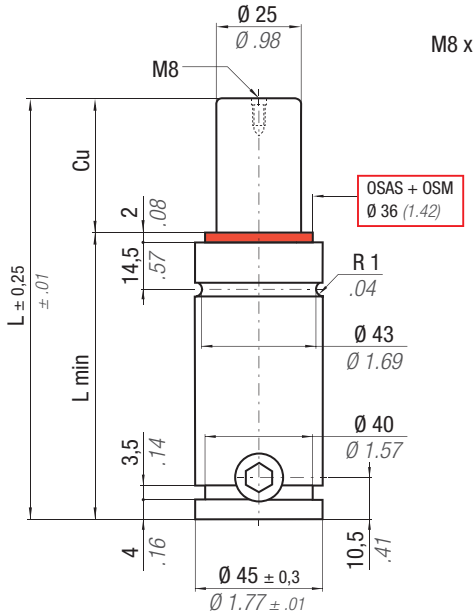

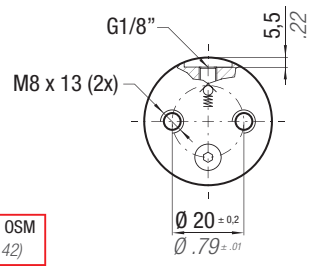

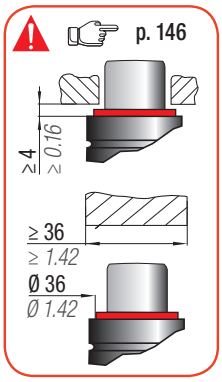

OSAS + OSM = OVER STROKE ACTIVE SAFETY + OVER STROKE MARKER

easy MANIFOLD p. 241

* $F1_i$ = Isothermal end force at 100% Cu p. 18

** $F1_p$ = Polytrophic end force at 100% Cu

SW

HIGH TEMP.

ACTIVE SAFETY

OSAS

USAS

OPAS

N_2	°F 212 - 248	°C 100 - 120	ΔP	P max	P min	S	SPM	Max Speed	Maintenance kit
			± 0,33 %/°C	115 bar *1668 psi*	20 bar *290 psi*	4,91 cm² *0.761 in²*	~ 5 ÷ 20	1 m/s	39BMMMGS00045B

CODE	Cu mm	Cu *inch*	L mm	L *inch*	L min mm	L min *inch*	F0 Initial force daN	F0 *lb*	$F1_i$ * End force daN	$F1_i$ *lb*	$F1_p$ ** End force daN	$F1_p$ *lb*	V0 cm³	V0 *in³*	~Kg	*~lb*	PED 2014/68/EU
HT 700 - 010 - A - T2	10	*0.39*	105	*4.13*	95	*3.74*			952	*2141*	1096	*2463*	25,9	*1.58*	0,90	*1.98*	✓
HT 700 - 013 - A - T2	13	*0.50*	110,7	*4.35*	97,7	*3.85*			989	*2224*	1156	*2600*	29,4	*1.79*	0,91	*2.01*	✓
HT 700 - 025 - A - T2	25	*0.98*	135	*5.31*	110	*4.33*	565	*1270*	1074	*2415*	1299	*2919*	45,0	*2.75*	1,00	*2.20*	✓
HT 700 - 038 - A - T2	38	*1.50*	161	*6.34*	123	*4.84*	+ 20°C		1126	*2532*	1388	*3121*	61,5	*3.75*	1,09	*2.40*	✓
HT 700 - 050 - A - T2	50	*1.97*	185	*7.28*	135	*5.31*	*+ 68°F*		1157	*2600*	1441	*3240*	76,8	*4.68*	1,17	*2.58*	✓
HT 700 - 063 - A - T2	63	*2.48*	211,5	*8.33*	148,5	*5.85*			1176	*2643*	1475	*3316*	93,9	*5.73*	1,26	*2.78*	✓
HT 700 - 080 - A - T2	80	*3.15*	245	*9.65*	165	*6.50*	750	*1686*	1200	*2697*	1518	*3412*	115,0	*7.02*	1,37	*3.02*	✓
HT 700 - 100 - A - T2	100	*3.94*	285	*11.22*	185	*7.28*	+ 120°C		1216	*2734*	1547	*3478*	140,4	*8.56*	1,51	*3.33*	✓
HT 700 - 125 - A - T2	125	*4.92*	335	*13.19*	210	*8.27*	*+ 248°F*		1230	*2766*	1572	*3535*	172,2	*10.50*	1,67	*3.68*	✓
HT 700 - 160 - A - T2	160	*6.30*	405	*15.94*	245	*9.65*			1243	*2795*	1596	*3587*	216,8	*13.22*	1,91	*4.21*	✓
HT 700 - 200 - A - T2	200	*7.87*	485	*19.09*	285	*11.22*			1253	*2817*	1613	*3627*	267,7	*16.33*	2,20	*4.85*	✓

End force at 120°C / *248°F*

HT

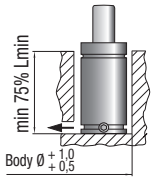

Drop-in

Bottom mount
FB 45 - FBA 45
FBB 45 - FBD 45

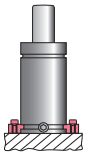

FS2A 45 - FT 45
FS2 45 - FTP 45

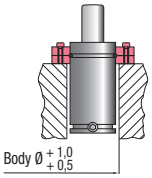

FC 45 A
FCQC 45

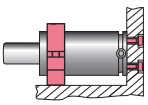

FSA 45
FSD 45 - FSE 45

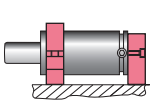

FSA 45 + R 50 A
FSE 45 + R 50 A

HOW TO ORDER p. 147

INSTALLATION GUIDELINE p. 203

HT 1000 T1

80 ÷ 100°C / *176 ÷ 212°F*

SPECIAL SPRINGS

SW

HIGH TEMP.

ACTIVE SAFETY

OSAS

USAS

OPAS

OSAS + OSM = OVER STROKE ACTIVE SAFETY + OVER STROKE MARKER

easy MANIFOLD p. 241

*** $F1_i$ =** Isothermal end force at 100% Cu p. 18

**** $F1_p$ =** Polytrophic end force at 100% Cu

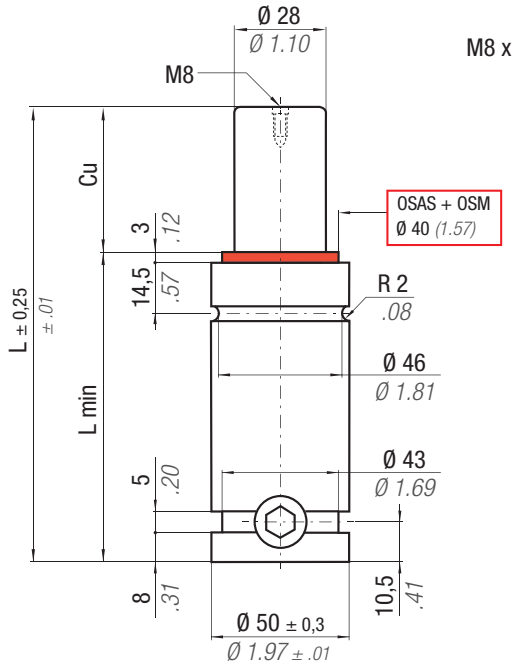

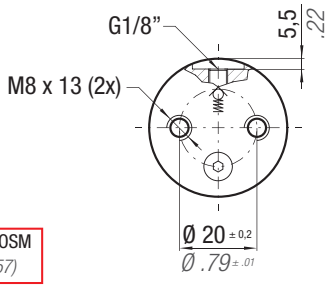

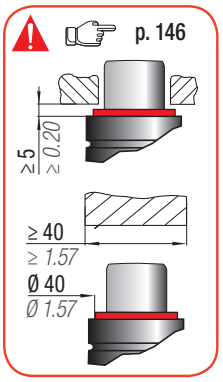

N_2	°F 176 - 212	°C 80 - 100	ΔP	P max	P min	S	SPM	Max Speed	Maintenance kit
			± 0,33 %/°C	125 bar *1813 psi*	20 bar *290 psi*	6,15 cm² *0.953 in²*	~ 5 ÷ 20	1 m/s	39BMHT01000A

CODE	Cu mm	Cu *inch*	L mm	L *inch*	L min mm	L min *inch*	Fo Initial force daN	Fo *lb*	$F1_i$ * End force daN	$F1_i$ *lb*	$F1_p$ ** End force daN	$F1_p$ *lb*	Vo cm³	Vo *in³*	~Kg	*~lb*	PED 2014/68/EU
HT 1000 - 013 - A - T1	13	*0.50*	120,7	*4.74*	107,7	*4.24*			1234	*2774*	1407	*3163*	42,8	*2.61*	1,21	*2.67*	✓
HT 1000 - 025 - A - T1	25	*0.98*	145	*5.71*	120	*4.72*			1349	*3032*	1591	*3576*	62,1	*3.79*	1,32	*2.91*	✓
HT 1000 - 038 - A - T1	38	*1.50*	171	*6.73*	133	*5.24*			1425	*3203*	1717	*3860*	82,5	*5.03*	1,43	*3.15*	✓
HT 1000 - 050 - A - T1	50	*1.97*	195	*7.68*	145	*5.71*			1472	*3308*	1796	*4037*	101,3	*6.18*	1,53	*3.37*	✓
HT 1000 - 063 - A - T1	63	*2.48*	221	*8.74*	158	*6.22*	770	*1731*	1508	*3390*	1857	*4175*	121,8	*7.43*	1,64	*3.62*	✓
HT 1000 - 075 - A - T1	75	*2.95*	245	*9.65*	170	*6.69*	+ 20°C	*+ 68°F*	1533	*3446*	1900	*4272*	140,6	*8.58*	1,74	*3.84*	✓
HT 1000 - 080 - A - T1	80	*3.15*	255	*10.04*	175	*6.89*			1542	*3466*	1915	*4305*	148,5	*9.06*	1,78	*3.92*	✓
HT 1000 - 100 - A - T1	100	*3.94*	295	*11.61*	195	*7.68*			1570	*3529*	1963	*4414*	179,9	*10.97*	1,96	*4.32*	✓
HT 1000 - 125 - A - T1	125	*4.92*	345	*13.58*	220	*8.66*	970	*2181*	1594	*3584*	2006	*4509*	219,1	*13.37*	2,17	*4.78*	✓
HT 1000 - 150 - A - T1	150	*5.91*	395	*15.55*	245	*9.65*	+ 100°C	*+ 212°F*	1611	*3623*	2036	*4578*	258,4	*15.76*	2,38	*5.25*	✓
HT 1000 - 160 - A - T1	160	*6.30*	415	*16.34*	255	*10.04*			1617	*3635*	2046	*4600*	274,1	*16.72*	2,46	*5.42*	✓
HT 1000 - 175 - A - T1	175	*6.89*	445	*17.52*	270	*10.63*			1624	*3652*	2059	*4629*	297,7	*18.16*	2,59	*5.71*	✓
HT 1000 - 200 - A - T1	200	*7.87*	495	*19.49*	295	*11.61*			1635	*3675*	2077	*4669*	337	*20.56*	2,79	*6.15*	✓
HT 1000 - 250 - A - T1	250	*9.84*	595	*23.43*	345	*13.58*			1649	*3708*	2103	*4728*	415,5	*25.35*	3,21	*7.08*	✓
HT 1000 - 300 - A - T1	300	*11.81*	695	*27.36*	395	*15.55*			1660	*3731*	2121	*4768*	494	*30.13*	3,63	*8.00*	✓

End force at 100°C / *212°F*

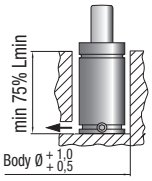

Drop-in

Bottom mount
FB 50 - FBA 50
FBB 50 - FBD 50

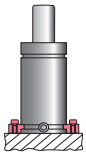

FS2A 50 - FT 50
FS2 50 - FTP 50

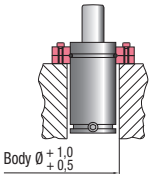

FC 50 A
FCQC 50

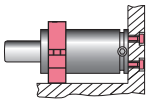

FSA 50
FSD 50

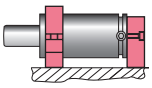

FSD 50 + R 50 A
FSE 50 + R 50 A

HOW TO ORDER p. 147

INSTALLATION GUIDELINE p. 203

HT 1000 T2

100 ÷ 120°C / *212 ÷ 248°F*

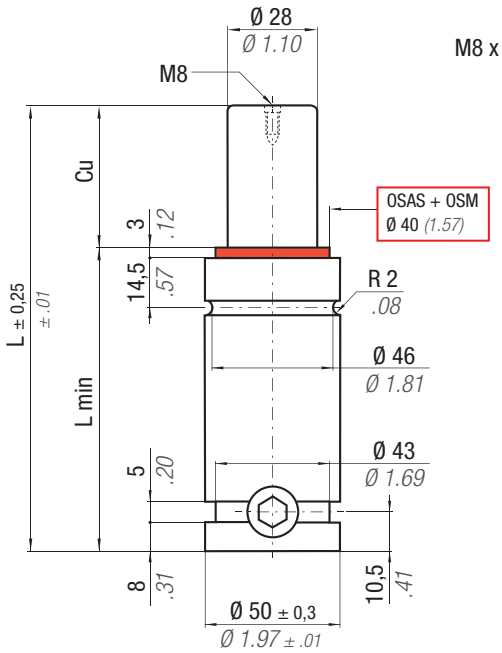

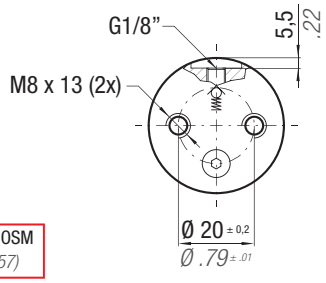

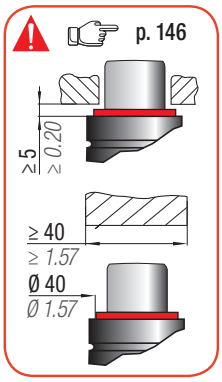

OSAS + OSM = OVER STROKE ACTIVE SAFETY + OVER STROKE MARKER

easy MANIFOLD p. 241

* $F1_i$ = Isothermal end force at 100% Cu p. 18

** $F1_p$ = Polytrophic end force at 100% Cu

SW

HIGH TEMP.

ACTIVE SAFETY

OSAS

USAS

OPAS

N_2	°F 212 - 248	°C 100 - 120	ΔP	P max	P min	S	SPM	Max Speed	Maintenance kit
			± 0,33 %/°C	115 bar *1668 psi*	20 bar *290 psi*	6,15 cm² *0.953 in²*	~ 5 ÷ 20	1 m/s	39BMHT01000A

CODE	Cu mm	Cu *inch*	L mm	L *inch*	L min mm	L min *inch*	F0 Initial force daN	F0 *lb*	$F1_i$ * End force daN	$F1_i$ *lb*	$F1_p$ ** End force daN	$F1_p$ *lb*	V0 cm³	V0 *in³*	~Kg	*~lb*	PED 2014/68/EU
HT 1000 - 013 - A - T2	13	*0.50*	120,7	*4.74*	107,7	*4.24*			1190	*2675*	1366	*3072*	42,8	*2.61*	1,21	*2.67*	✓
HT 1000 - 025 - A - T2	25	*0.98*	145	*5.71*	120	*4.72*			1298	*2918*	1545	*3474*	62,1	*3.79*	1,32	*2.91*	✓
HT 1000 - 038 - A - T2	38	*1.50*	171	*6.73*	133	*5.24*			1370	*3080*	1668	*3749*	82,5	*5.03*	1,43	*3.15*	✓
HT 1000 - 050 - A - T2	50	*1.97*	195	*7.68*	145	*5.71*			1414	*3179*	1744	*3921*	101,3	*6.18*	1,53	*3.37*	✓
HT 1000 - 063 - A - T2	63	*2.48*	221	*8.74*	158	*6.22*	705	*1585*	1449	*3256*	1804	*4055*	121,8	*7.43*	1,64	*3.62*	✓
HT 1000 - 075 - A - T2	75	*2.95*	245	*9.65*	170	*6.69*	+ 20°C	*+ 68°F*	1472	*3310*	1845	*4149*	140,6	*8.58*	1,74	*3.84*	✓
HT 1000 - 080 - A - T2	80	*3.15*	255	*10.04*	175	*6.89*			1480	*3328*	1860	*4182*	148,5	*9.06*	1,78	*3.92*	✓
HT 1000 - 100 - A - T2	100	*3.94*	295	*11.61*	195	*7.68*			1507	*3387*	1907	*4287*	179,9	*10.97*	1,96	*4.32*	✓
HT 1000 - 125 - A - T2	125	*4.92*	345	*13.58*	220	*8.66*	940	*2113*	1530	*3439*	1948	*4380*	219,1	*13.37*	2,17	*4.78*	✓
HT 1000 - 150 - A - T2	150	*5.91*	395	*15.55*	245	*9.65*	+ 120°C	*+ 248°F*	1546	*3476*	1978	*4446*	258,4	*15.76*	2,38	*5.25*	✓
HT 1000 - 160 - A - T2	160	*6.30*	415	*16.34*	255	*10.04*			1552	*3488*	1987	*4468*	274,1	*16.72*	2,46	*5.42*	✓
HT 1000 - 175 - A - T2	175	*6.89*	445	*17.52*	270	*10.63*			1558	*3504*	2000	*4496*	297,7	*18.16*	2,59	*5.71*	✓
HT 1000 - 200 - A - T2	200	*7.87*	495	*19.49*	295	*11.61*			1568	*3525*	2017	*4535*	337	*20.56*	2,79	*6.15*	✓
HT 1000 - 250 - A - T2	250	*9.84*	595	*23.43*	345	*13.58*			1582	*3556*	2043	*4592*	415,5	*25.35*	3,21	*7.08*	✓
HT 1000 - 300 - A - T2	300	*11.81*	695	*27.36*	395	*15.55*			1592	*3578*	2060	*4631*	494	*30.13*	3,63	*8.00*	✓

End force at 120°C / *248°F*

HT

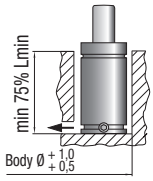

Drop-in

Bottom mount
FB 50 - FBA 50
FBB 50 - FBD 50

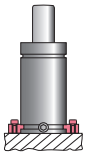

FS2A 50 - FT 50
FS2 50 - FTP 50

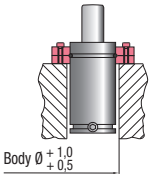

FC 50 A
FCQC 50

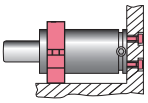

FSA 50
FSD 50

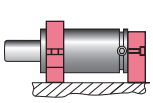

FSD 50 + R 50 A
FSE 50 + R 50 A

HOW TO ORDER p. 147

INSTALLATION GUIDELINE p. 203

- 55 % noise
- 50 % vibrations

INITIAL IMPACT VIBRATIONS

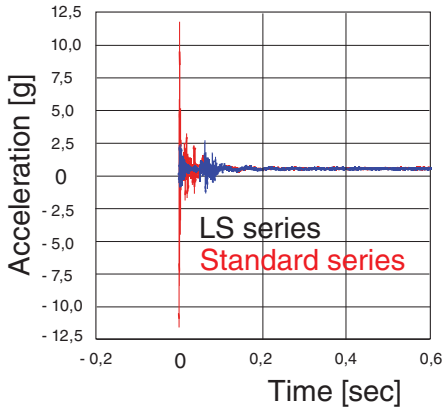

FORCE CURVE

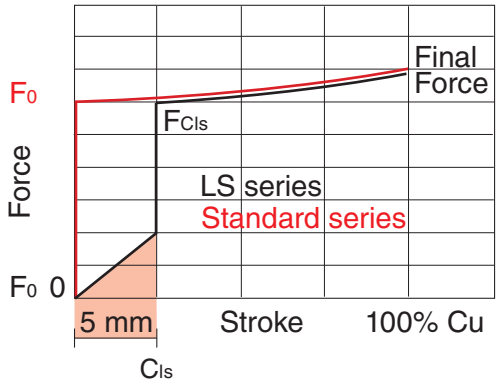

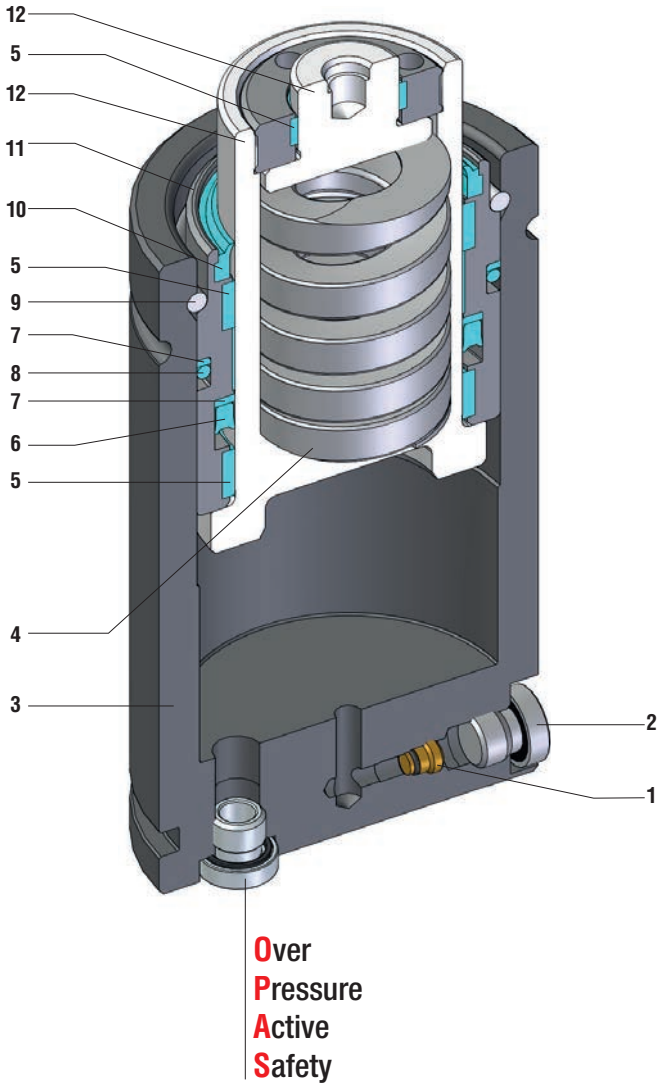

Forza iniziale nulla - Zero force on contact - Ausgangsleistung null
Force initiale nulle - Fuerza inicial cero - Força inicial nula

SEALING	ROD SEAL
DESIGN	BUSH - BODY DESIGN

1	Valve	**5**	Guide ring	**9**	Retaining ring
2	Plug	**6**	Rod seal	**10**	Rod wiper
3	Body	**7**	Back-up ring	**11**	Bush
4	Spring	**8**	O-ring	**12**	Rod (nitrited superfinished)

RANGE CHART

Model	Body Ø		Stroke Cu		Initial force F0		OSAS	USAS	OPAS	SKUDO	SW
	mm	*inch*	mm	*inch*	daN	*lb*					
LS 1500	75	*2.95*	25 - 300	*0.98 - 11.81*	1590	*3574*	-	-	✓	-	-
LS 2400	75	*2.95*	25 - 300	*0.98 - 11.81*	2385	*5362*	-	-	✓	-	-
LS 3000	95	*3.74*	25 - 300	*0.98 - 11.81*	2830	*6362*	-	-	✓	-	-
LS 4200	95	*3.74*	25 - 300	*0.98 - 11.81*	4240	*9532*	-	-	✓	-	-
LS 5000	120	*4.72*	25 - 300	*0.98 - 11.81*	4418	*9932*	-	-	✓	-	-
LS 6600	120	*4.72*	25 - 300	*0.98 - 11.81*	6630	*14905*	-	-	✓	-	-
LS 7500	150	*5.91*	25 - 300	*0.98 - 11.81*	7630	*17152*	✓	✓	✓	-	-
LS 9500	150	*5.91*	25 - 300	*0.98 - 11.81*	9540	*21446*	✓	✓	✓	-	-

✓ Built-in as standard ✓ Optional upon request

LS

HOW TO ORDER

Series
Revision code
Model
LS 2400-050-A-N
Stroke
Version

Available versions

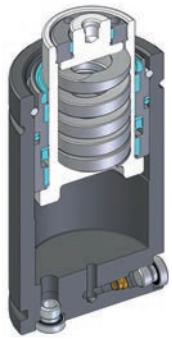

LS 2400-050-A
Standard code
Self contained

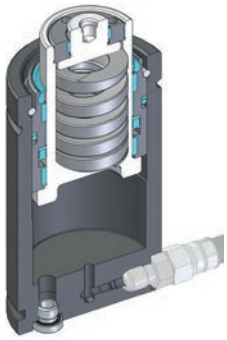

LS 2400-050-A-N
Add "-N" to standard code
Linkable

LS 1500

- 50% VIBRATIONS
- 55% NOISE

SPECIAL SPRINGS

ACTIVE SAFETY

OPAS

*** $F1_i$ =** Isothermal end force at 100% Cu p. 18

**** $F1_p$ =** Polytrophic end force at 100% Cu

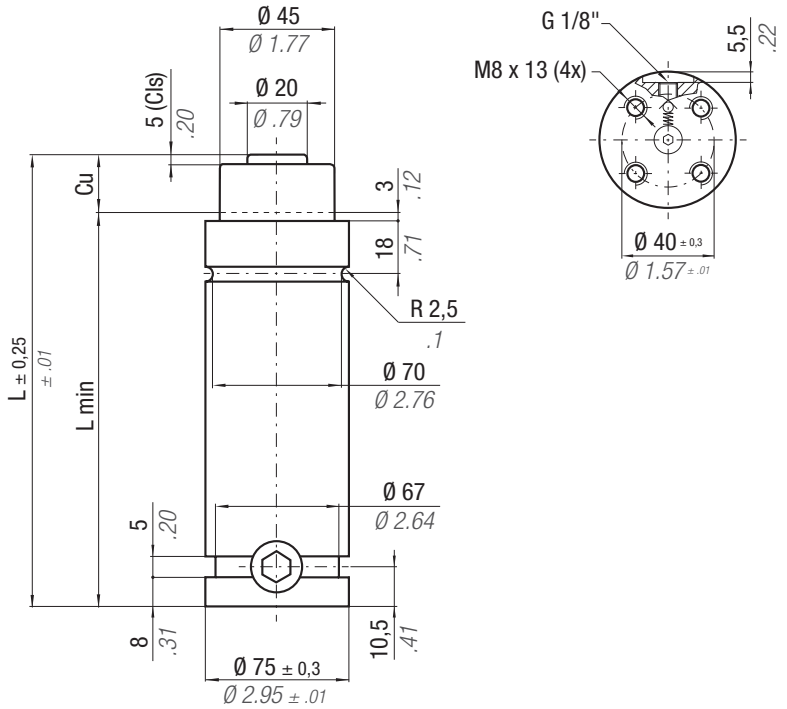

N2	°F 32 - 176	°C 0 - 80	ΔP	P max	P min	S	SPM	Max Speed	Maintenance kit
			± 0,33 %/°C	100 bar *1450 psi*	20 bar *290 psi*	15,90 cm² *2.465 in²*	~ 15 - 60 (at 20°C)	1,8 m/s	39BMLS01500A

CODE	Cu mm	Cu inch	L mm	L inch	L min mm	L min inch	F0 daN	F0 lb	F Cls daN	F Cls lb	$F1_i$ * daN	$F1_i$ lb	$F1_p$ ** daN	$F1_p$ lb	V0 cm³	V0 in³	~Kg	~lb	PED 2014/68/EU
							Initial force				End force *		End force **						
LS 1500 - 025 - A	25	0.98	160	6.30	135	5.31					2377	5344	2990	6722	129,0	7.87	3,71	8.18	✓
LS 1500 - 038 - A	38	1.50	186	7.32	148	5.83					2519	5663	3252	7311	176,0	10.74	3,79	8.36	✓
LS 1500 - 050 - A	50	1.97	210	8.27	160	6.30					2603	5852	3411	7668	219,0	13.36	3,89	8.58	✓
LS 1500 - 063 - A	63,5	2.50	237	9.33	173,5	6.83	0 ± 5%	0	1590 ± 5%	3574	2681	6027	3560	8002	265,0	16.17	4,48	9.88	✓
LS 1500 - 080 - A	80	3.15	270	10.63	190	7.48					2725	6126	3645	8195	326,0	19.89	4,73	10.43	✓
LS 1500 - 100 - A	100	3.94	310	12.20	210	8.27	100 bar *1450 psi*		100 bar *1450 psi*		2773	6234	3738	8403	398,0	24.28	4,89	10.78	✓
LS 1500 - 125 - A	125	4.92	360	14.17	235	9.25					2814	6326	3818	8583	488,0	29.77	5,57	12.28	✓
LS 1500 - 160 - A	160	6.30	430	16.93	270	10.63					2852	6412	3894	8753	614,0	37.45	6,33	13.96	✓
LS 1500 - 200 - A	200	7.87	510	20.08	310	12.20	+ 20 °C *+68 °F*		+ 20 °C *+68 °F*		2881	6477	3951	8881	757,0	46.18	7,19	15.85	✓
LS 1500 - 250 - A	250	9.84	610	24.02	360	14.17					2905	6531	3998	8989	937,0	57.16	9,19	20.26	✓
LS 1500 - 300 - A	300	11.81	710	27.95	410	16.14					2921	6567	4031	9063	1116,0	68.08	11,04	24.34	✓

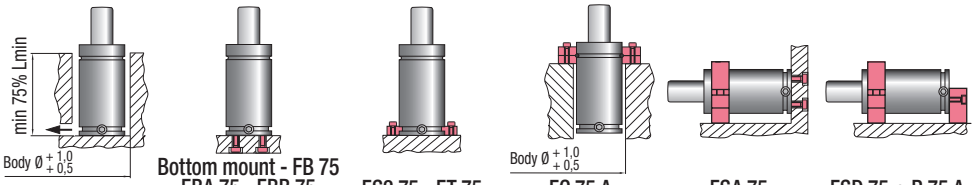

HOW TO ORDER p. 155

INSTALLATION GUIDELINE p. 203

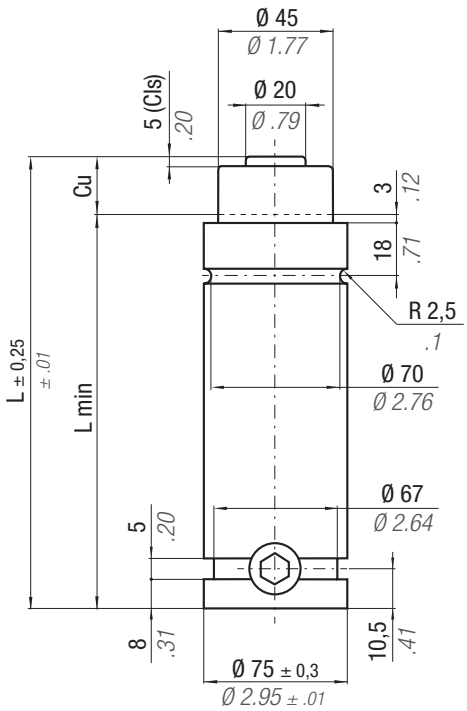

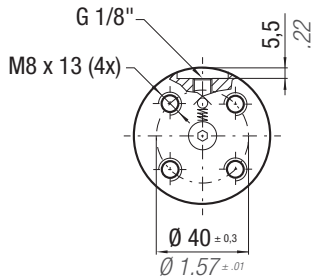

*** $F1_i$ =** Isothermal end force at 100% Cu p. 18

**** $F1_p$ =** Polytrophic end force at 100% Cu

ACTIVE SAFETY

OPAS

N_2	°F 32 - 176	°C 0 ~ 80	ΔP	P max	P min	S	SPM	Max Speed	Maintenance kit
			± 0,33 %/°C	150 bar *2175 psi*	20 bar *290 psi*	15,90 cm² *2.465 in²*	~ 15 - 60 (at 20°C)	1,8 m/s	39BMLS01500A

CODE	Cu mm	Cu inch	L mm	L inch	L min mm	L min inch	F0 Initial force daN	F0 lb	F Cls daN	F Cls lb	$F1_i$ * End force daN	$F1_i$ lb	$F1_p$ ** End force daN	$F1_p$ lb	V0 cm³	V0 in³	~Kg	~lb	PED 2014/68/EU
LS 2400 - 025 - A	25	0.98	160	6.30	135	5.31	0 ± 5%	0	2385 ± 5%	5362	3699	7754	4471	10051	129,0	7.87	3,71	8.18	✓
LS 2400 - 038 - A	38	1.50	186	7.32	148	5.83					3941	8177	4863	10932	176,0	10.74	3,79	8.36	✓
LS 2400 - 050 - A	50	1.97	210	8.27	160	6.30					4085	8428	5100	11465	219,0	13.36	3,89	8.58	✓
LS 2400 - 063 - A	63,5	2.50	237	9.33	173,5	6.83					4219	8617	5323	11875	265,0	16.17	4,48	9.88	✓
LS 2400 - 080 - A	80	3.15	270	10.63	190	7.48					4295	8790	5451	12253	326,0	19.89	4,73	10.43	✓
LS 2400 - 100 - A	100	3.94	310	12.20	210	8.27	150 bar *2175 psi*		150 bar *2175 psi*		4377	8931	5589	12564	398,0	24.28	4,89	10.78	✓
LS 2400 - 125 - A	125	4.92	360	14.17	235	9.25					4447	9052	5709	12834	488,0	29.77	5,57	12.28	✓
LS 2400 - 160 - A	160	6.30	430	16.93	270	10.63	+ 20 °C *+68 °F*		+ 20 °C *+68 °F*		4513	9164	5822	13088	614,0	37.45	6,33	13.96	✓
LS 2400 - 200 - A	200	7.87	510	20.08	310	12.20					4563	9249	5907	13280	757,0	46.18	7,19	15.85	✓
LS 2400 - 250 - A	250	9.84	610	24.02	360	14.17					4605	9320	5979	13441	937,0	57.16	9,19	20.26	✓
LS 2400 - 300 - A	300	11.81	710	27.95	410	16.14					4633	9369	6028	13551	1116,0	68.08	11,04	24.34	✓

LS

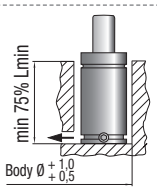

Drop-in

Bottom mount - FB 75
FBA 75 - FBB 75
FBC 75 - FBD 75

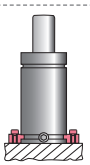

FS2 75 - FT 75
FS2A 75 - FTP 75

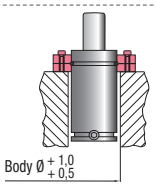

FC 75 A
FCQC 75

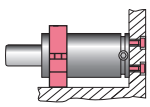

FSA 75
FSD 75 - FSE 75

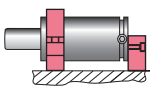

FSD 75 + R 75 A
FSE 75 + R 75 A

HOW TO ORDER p. 155

INSTALLATION GUIDELINE p. 203

LS 3000

- 50% VIBRATIONS
- 55% NOISE

SPECIAL SPRINGS

ACTIVE SAFETY

OPAS

*** $F1_i$ =**
Isothermal end force at 100% Cu p. 18

**** $F1_p$ =**
Polytrophic end force at 100% Cu

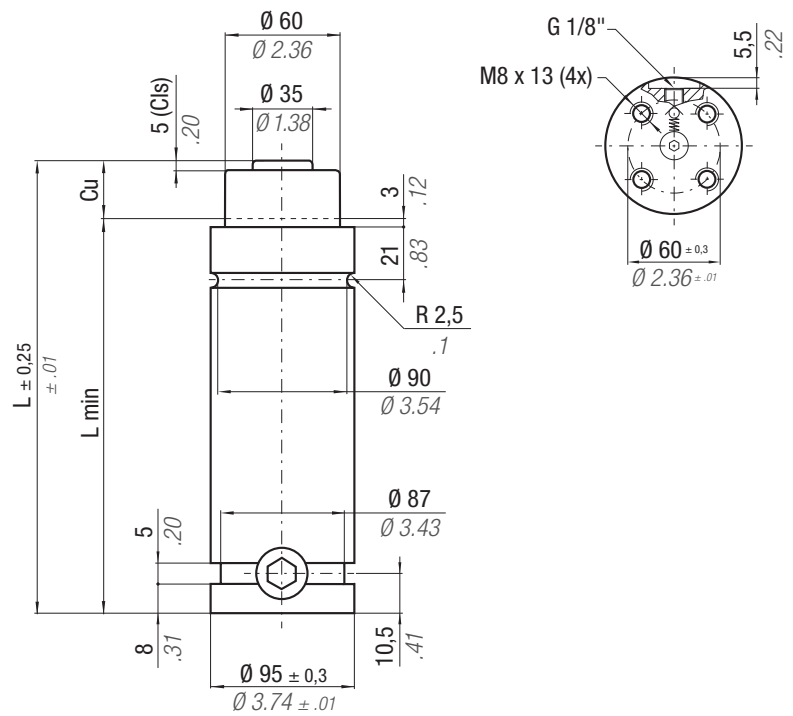

N2	°F 32 - 176	°C 0 - 80	ΔP	P max	P min	S	SPM	Max Speed	Maintenance kit
			± 0,33 %/°C	100 bar *1450 psi*	20 bar *290 psi*	28,27 cm² *4.382 in²*	~ 15 - 60 (at 20°C)	1,8 m/s	39BMLS03000A

CODE	Cu mm	Cu inch	L mm	L inch	L min mm	L min inch	F0 daN	F0 lb	F Cls daN	F Cls lb	$F1_i$ * daN	$F1_i$ lb	$F1_p$ ** daN	$F1_p$ lb	V0 cm³	V0 in³	~Kg	~lb	PED 2014/68/EU
							Initial force				End force *		End force **						
LS 3000 - 025 - A	25	0.98	170	6.69	145	5.71	0 ± 5%	0	2830 ± 5%	6362	4179	9395	5231	11759	235,0	14.34	5,69	12.54	✓
LS 3000 - 038 - A	38	1.50	196	7.72	158	6.22					4510	10138	5841	13131	308,0	18.79	6,48	14.29	✓
LS 3000 - 050 - A	50	1.97	220	8.66	170	6.69					4723	10619	6246	14042	377,0	23.00	6,77	14.93	✓
LS 3000 - 063 - A	63,5	2.50	247	9.72	183,5	7.22					4923	11067	6632	14910	450,0	27.45	6,84	15.08	✓
LS 3000 - 080 - A	80	3.15	280	11.02	200	7.87					5060	11376	6902	15516	547,0	33.37	7,23	15.94	✓
LS 3000 - 100 - A	100	3.94	320	12.60	220	8.66	100 bar *1450 psi*		100 bar *1450 psi*		5200	11691	7181	16144	660,0	40.26	7,95	17.53	✓
LS 3000 - 125 - A	125	4.92	370	14.57	245	9.65					5326	11973	7434	16712	802,0	48.92	9,58	21.12	✓
LS 3000 - 160 - A	160	6.30	440	17.32	280	11.02	+ 20 °C *+68 °F*		+ 20 °C *+68 °F*		5447	12246	7681	17267	1001,0	61.06	10,89	24.01	✓
LS 3000 - 200 - A	200	7.87	520	20.47	320	12.60					5541	12458	7874	17701	1228,0	74.91	11,03	24.32	✓
LS 3000 - 250 - A	250	9.84	620	24.41	370	14.57					5622	12638	8040	18074	1511,0	92.17	12,06	26.59	✓
LS 3000 - 300 - A	300	11.81	720	28.35	420	16.54					5678	12764	8156	18336	1795,0	109.50	13,02	28.70	✓

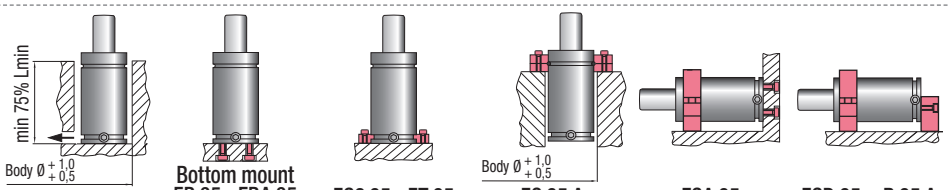

Drop-in | Bottom mount FB 95 - FBA 95 FBB 95 | FS2 95 - FT 95 FS2A 95 - FTP 95 | FC 95 A FCQC 95 | FSA 95 FSD 95 - FSE 95 | FSD 95 + R 95 A FSE 95 + R 95 A

HOW TO ORDER p. 155

INSTALLATION GUIDELINE p. 203

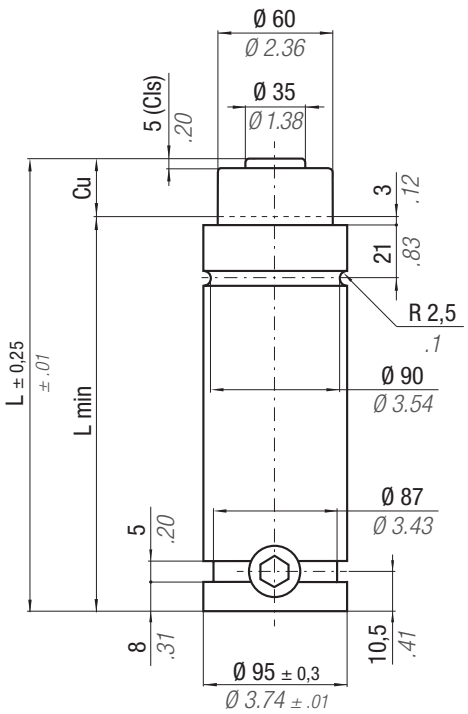

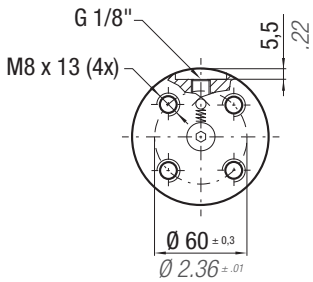

*** $F1_i$ =** Isothermal end force at 100% Cu p. 18

**** $F1_p$ =** Polytrophic end force at 100% Cu

ACTIVE SAFETY

OPAS

N_2	°F 32 - 176	°C 0 ~ 80	ΔP	P max	P min	S	SPM	Max Speed	Maintenance kit
			± 0,33 %/°C	150 bar *2175 psi*	20 bar *290 psi*	28,27 cm² *4.382 in²*	~ 15 - 60 (at 20°C)	1,8 m/s	39BMLS03000A

CODE	Cu mm	Cu inch	L mm	L inch	L min mm	L min inch	F0 daN	F0 lb	F Cls daN	F Cls lb	$F1_i$ * daN	$F1_i$ * lb	$F1_p$ ** daN	$F1_p$ ** lb	V0 cm³	V0 in³	~Kg	~lb	PED 2014/68/EU
							Initial force				End force		End force						
LS 4200 - 025 - A	25	0.98	170	6.69	145	5.71					6498	14607	7821	17583	235,0	14.34	5,69	12.54	✓
LS 4200 - 038 - A	38	1.50	196	7.72	158	6.22					7060	15873	8733	19633	308,0	18.79	6,48	14.29	✓
LS 4200 - 050 - A	50	1.97	220	8.66	170	6.69					7427	16696	9340	20997	377,0	23.00	6,77	14.93	✓
LS 4200 - 063 - A	63,5	2.50	247	9.72	183,5	7.22	0 ± 5%	0	4240 ± 5%	9532	7770	17467	9917	22294	450,0	27.45	6,84	15.08	✓
LS 4200 - 080 - A	80	3.15	280	11.02	200	7.87					8006	17999	10320	23201	547,0	33.37	7,23	15.94	✓
LS 4200 - 100 - A	100	3.94	320	12.60	220	8.66	150 bar *2175 psi*		150 bar *2175 psi*		8249	18545	10738	24139	660,0	40.26	7,95	17.53	✓
LS 4200 - 125 - A	125	4.92	370	14.57	245	9.65					8467	19035	11116	24989	802,0	48.92	9,58	21.12	✓
LS 4200 - 160 - A	160	6.30	440	17.32	280	11.02					8678	19508	11485	25818	1001,0	61.06	10,89	24.01	✓
LS 4200 - 200 - A	200	7.87	520	20.47	320	12.60	+ 20 °C *+68 °F*		+ 20 °C *+68 °F*		8841	19876	11773	26467	1228,0	74.91	11,03	24.32	✓
LS 4200 - 250 - A	250	9.84	620	24.41	370	14.57					8981	20191	12021	27025	1511,0	92.17	12,06	26.59	✓
LS 4200 - 300 - A	300	11.81	720	28.35	420	16.54					9079	20411	12196	27417	1795,0	109.50	13,02	28.70	✓

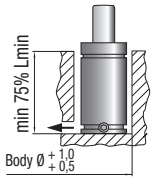

Drop-in

Bottom mount
FB 95 - FBA 95
FBB 95

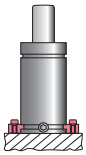

FS2 95 - FT 95
FS2A 95 - FTP 95

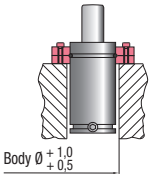

FC 95 A
FCQC 95

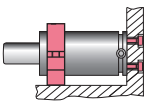

FSA 95
FSD 95 - FSE 95

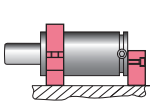

FSD 95 + R 95 A
FSE 95 + R 95 A

HOW TO ORDER p. 155

INSTALLATION GUIDELINE p. 203

LS 5000

- 50% VIBRATIONS
- 55% NOISE

SPECIAL SPRINGS

ACTIVE SAFETY

*** $F1_i$ =** Isothermal end force at 100% Cu p. 18

**** $F1_p$ =** Polytrophic end force at 100% Cu

OPAS

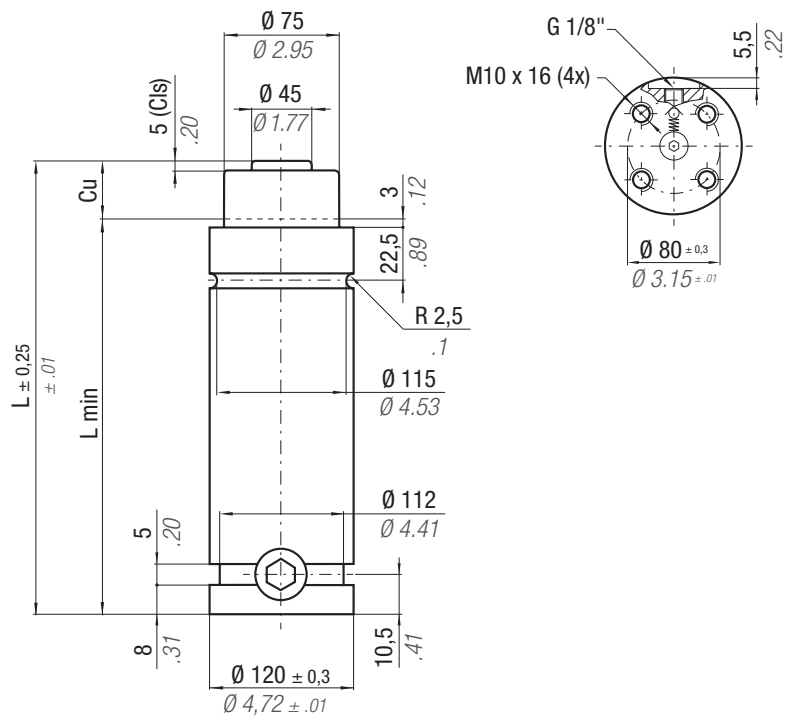

N2	°F 32 - 176	°C 0 - 80	ΔP	P max	P min	S	SPM	Max Speed	Maintenance kit
			± 0,33 %/°C	100 bar *1450 psi*	20 bar *290 psi*	44,18 cm² *6.848 in²*	~ 15 - 60 (at 20°C)	1,8 m/s	39BMLS05000A

CODE	Cu mm	Cu inch	L mm	L inch	L min mm	L min inch	F0 Initial force daN	F0 lb	F Cls daN	F Cls lb	$F1_i$ * End force daN	$F1_i$ lb	$F1_p$ ** End force daN	$F1_p$ lb	V0 cm³	V0 in³	~Kg	~lb	PED 2014/68/EU
LS 5000 - 025 - A	25	0.98	190	7.48	165	6.50	0 ± 5%	0	4418 ± 5%	9932	6654	14958	8399	19241	353,0	21.53	10,60	23.37	✓
LS 5000 - 038 - A	38	1.50	216	8.50	178	7.01					7167	16111	9353	21427	468,0	28.55	12,00	26.46	✓
LS 5000 - 050 - A	50	1.97	240	9.45	190	7.48					7492	16842	9974	22850	575,0	35.08	13,20	29.10	✓
LS 5000 - 063 - A	63,5	2.50	267	10.51	203,5	8.01					7795	17523	10564	23997	691,0	42.15	13,60	29.98	✓
LS 5000 - 080 - A	80	3.15	300	11.81	220	8.66					7994	17970	10957	25102	842,0	51.36	14,10	31.09	✓
LS 5000 - 100 - A	100	3.94	340	13.39	240	9.45	100 bar *1450 psi*		100 bar *1450 psi*		8199	18433	11368	26044	1020,0	62.22	15,40	33.95	✓
LS 5000 - 125 - A	125	4.92	390	15.35	265	10.43					8382	18843	11737	26887	1243,0	75.82	16,90	37.26	✓
LS 5000 - 160 - A	160	6.30	460	18.11	300	11.81	+ 20 °C *+68 °F*		+ 20 °C *+68 °F*		8556	19235	12092	27703	1555,0	94.86	18,70	41.23	✓
LS 5000 - 200 - A	200	7.87	540	21.26	340	13.39					8690	19537	12369	28335	1911,0	116.57	21,70	47.84	✓
LS 5000 - 250 - A	250	9.84	640	25.20	390	15.35					8804	19793	12604	28875	2356,0	143.72	24,80	54.67	✓
LS 5000 - 300 - A	300	11.81	740	29.13	440	17.32					8884	19971	12769	29253	2801,0	170.86	28,00	61.73	✓

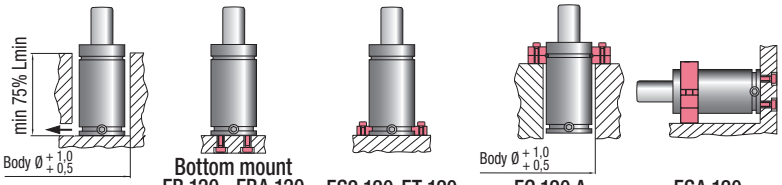

HOW TO ORDER p. 155

INSTALLATION GUIDELINE p. 203

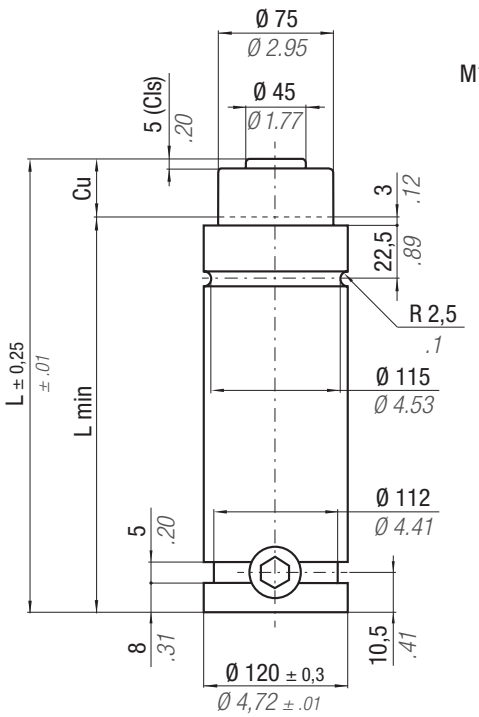

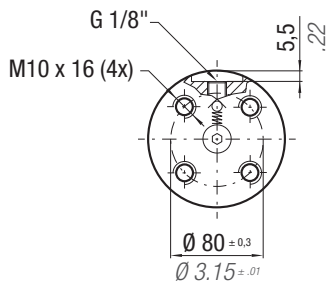

*** $F1_i$ =** Isothermal end force at 100% Cu p. 18

**** $F1_p$ =** Polytrophic end force at 100% Cu

ACTIVE SAFETY

OPAS

N2	°F 32 - 176 / °C 0 - 80	ΔP	P max	P min	S	SPM	Max Speed	Maintenance kit
		± 0,33 %/°C	150 bar *2175 psi*	20 bar *290 psi*	44,18 cm² *6.848 in²*	~ 15 - 60 (at 20°C)	1,8 m/s	39BMLS05000A

CODE	Cu mm	Cu inch	L mm	L inch	L min mm	L min inch	F0 daN	F0 lb	F Cls daN	F Cls lb	$F1_i$ * daN	$F1_i$ * lb	$F1_p$ ** daN	$F1_p$ ** lb	V0 cm³	V0 in³	~Kg	~lb	PED 2014/68/EU
LS 6600 - 025 - A	25	0.98	190	7.48	165	6.50	0 ± 5%	0	6630 ± 5%	14905	10363	23297	12558	28232	353,0	21.53	10,60	23.37	✓
LS 6600 - 038 - A	38	1.50	216	8.50	178	7.01					11238	25264	13985	31440	468,0	28.55	12,00	26.46	✓
LS 6600 - 050 - A	50	1.97	240	9.45	190	7.48					11796	26517	14914	33528	575,0	35.08	13,20	29.10	✓
LS 6600 - 063 - A	63,5	2.50	267	10.51	203.5	8.01					12317	27690	15796	35510	691,0	42.15	13,60	29.98	✓
LS 6600 - 080 - A	80	3.15	300	11.81	220	8.66					12661	28463	16384	36832	842,0	51.36	14,10	31.09	✓
LS 6600 - 100 - A	100	3.94	340	13.39	240	9.45	150 bar *2175 psi*		150 bar *2175 psi*		13017	29263	16998	38214	1020,0	62.22	15,40	33.95	✓
LS 6600 - 125 - A	125	4.92	390	15.35	265	10.43					13333	29974	17549	39452	1243,0	75.82	16,90	37.26	✓
LS 6600 - 160 - A	160	6.30	460	18.11	300	11.81					13637	30656	18081	40648	1555,0	94.86	18,70	41.23	✓
LS 6600 - 200 - A	200	7.87	540	21.26	340	13.39	+ 20 °C *+68 °F*		+ 20 °C *+68 °F*		13870	31182	18494	41576	1911,0	116.57	21,70	47.84	✓
LS 6600 - 250 - A	250	9.84	640	25.20	390	15.35					14069	31628	18846	42368	2356,0	143.72	24,80	54.67	✓
LS 6600 - 300 - A	300	11.81	740	29.13	440	17.32					14207	31939	19093	42922	2801,0	170.86	28,00	61.73	✓

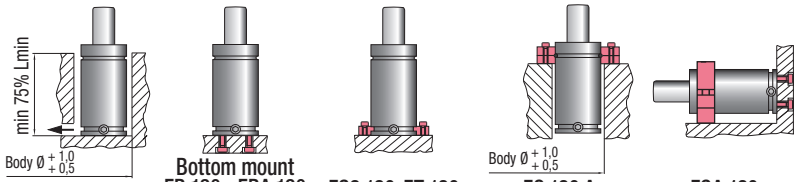

Drop-in | Bottom mount FB 120 - FBA 120 FBB 120 | FS2 120-FT 120 FS2A 120-FTP 120 | FC 120 A FCQC 120 | FSA 120 FSD 120

HOW TO ORDER p. 155

INSTALLATION GUIDELINE p. 203

LS 7500

- 50% VIBRATIONS
- 55% NOISE

SPECIAL SPRINGS

ACTIVE SAFETY

OSAS

USAS

OPAS

Il nuovo codice sarà fornito solo ad esaurimento del vecchio

The new code will be supplied only when the old will be out of stock

Der neue Kode wird geliefert nur wenn der alte nicht mehr im Lager ist

Le nouveau code sera fourni uniquement lorsque le vieux stock sera ecoulé

El nuevo código será suministrado sólo cuando el viejo está fuera de stock

O novo código irá ser fornecido apenas quando o antigo esgotar stock

*** $F1_i$ =** Isothermal end force at 100% Cu p. 18

**** $F1_p$ =** Polytrophic end force at 100% Cu

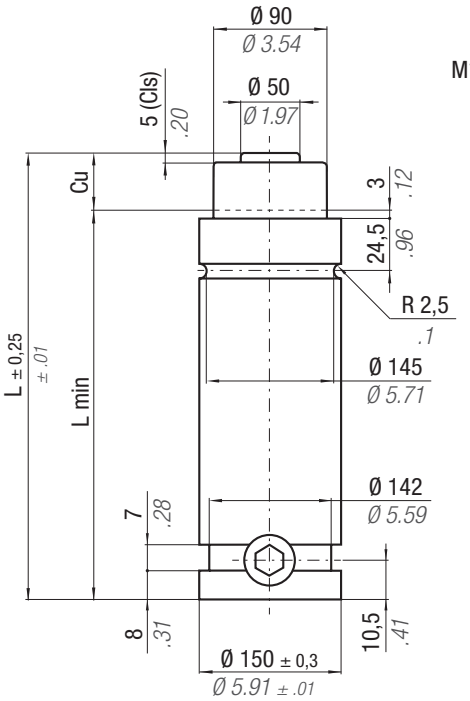

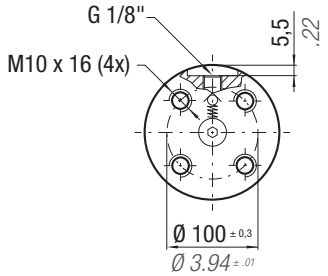

N2	°F 32 - 176	°C 0 - 80	ΔP	P max	P min	S	SPM	Max Speed	Maintenance kit
			± 0,33 %/°C	120 bar *1740 psi*	20 bar *290 psi*	63,61 cm² *9.860 in²*	~ 15 - 60 (at 20°C)	1,8 m/s	39BMLS07500A

CODE PHASING OUT	CODE NEW	Cu mm	Cu inch	L mm	L inch	L min mm	L min inch	F0 Initial force daN	F0 lb	F Cls daN	F Cls lb	$F1_i$ * End force daN	$F1_i$ lb	$F1_p$ ** End force daN	$F1_p$ lb	V0 cm³	V0 in³	~Kg	~lb	PED 2014/68/EU
LS 7500 - 025 - A	LS 7500 - 025 - B	25	0.98	205	8.07	180	7.09					10207	22946	11937	26835	594,0	36.23	19,95	43.98	✓
LS 7500 - 038 - A	LS 7500 - 038 - B	38	1.50	231	9.09	193	7.60					10950	24617	13169	29605	797,0	48.62	21,15	46.63	✓
LS 7500 - 050 - A	LS 7500 - 050 - B	50	1.97	255	10.04	205	8.07	0	0	7630	17152	11460	25763	14034	31550	784,0	47.82	21,95	48.39	✓
LS 7500 - 063 - A	LS 7500 - 063 - B	63,5	2.50	282	11.10	218,5	8.60	± 5%		± 5%		11901	26755	14795	33260	1195,0	72.90	22,75	50.16	✓
LS 7500 - 080 - A	LS 7500 - 080 - B	80	3.15	315	12.40	235	9.25					12313	27681	15515	34879	1452,0	88.57	24,55	54.12	✓
LS 7500 - 100 - A	LS 7500 - 100 - B	100	3.94	355	13.98	255	10.04	120 bar *1740 psi*		120 bar *1740 psi*		12688	28524	16181	36376	1764,0	107.60	26,25	57.87	✓
LS 7500 - 125 - A	LS 7500 - 125 - B	125	4.92	405	15.94	280	11.02					13034	29302	16801	37770	2153,0	131.33	28,15	62.06	✓
LS 7500 - 160 - A	LS 7500 - 160 - B	160	6.30	475	18.70	315	12.40	+ 20 °C *+68 °F*		+ 20 °C *+68 °F*		13379	30077	17425	39173	2699,0	164.64	31,55	69.56	✓
LS 7500 - 200 - A	LS 7500 - 200 - B	200	7.87	555	21.85	355	13.98					13653	30693	14926	33555	3323,0	202.70	35,15	77.49	✓
LS 7500 - 250 - A	LS 7500 - 250 - B	250	9.84	655	25.79	405	15.94					13891	31228	18365	41286	4102,0	250.22	38,65	85.21	✓
LS 7500 - 300 - A	LS 7500 - 300 - B	300	11.81	755	29.72	455	17.91					14061	31610	18680	41994	4882,0	297.80	42,55	93.81	✓

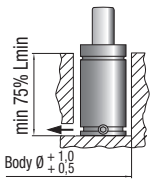

Drop-in

Bottom mount
FB 150 - FBA 150
FBB 150 - FBD 150

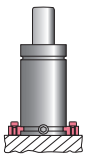

FS2 150-FT 150
FS2A 150-FTP 150

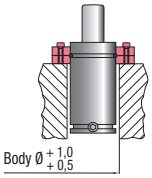

FC 150 A
FCQC 150

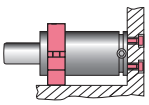

FSA 150
FSD 150

HOW TO ORDER

p. 155

INSTALLATION GUIDELINE

p. 203

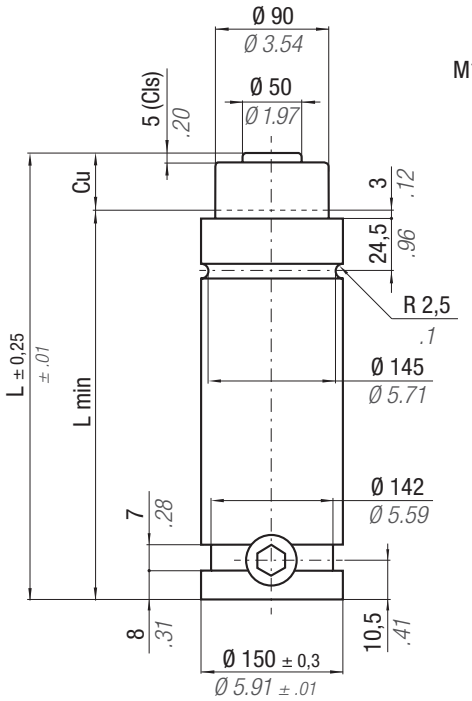

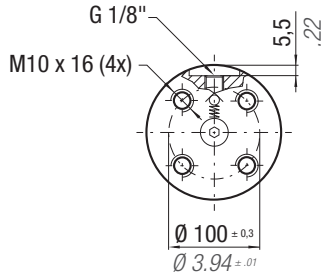

Il nuovo codice sarà fornito solo ad esaurimento del vecchio

The new code will be supplied only when the old will be out of stock

Der neue Kode wird geliefert nur wenn der alte nicht mehr im Lager ist

Le nouveau code sera fourni uniquement lorsque le vieux stock sera ecoulé

El nuevo código será suministrado sólo cuando el viejo está fuera de stock

O novo código irá ser fornecido apenas quando o antigo esgotar stock

*** $F1_i$ =** Isothermal end force at 100% Cu

p. 18

**** $F1_p$ =** Polytrophic end force at 100% Cu

ACTIVE SAFETY

OSAS

USAS

OPAS

N2	°F 32 - 176 / °C 0 - 80	ΔP	P max	P min	S	SPM	Max Speed	Maintenance kit
		± 0,33 %/°C	150 bar / 2175 psi	20 bar / 290 psi	63,61 cm² / 9.860 in²	~ 15 - 60 (at 20°C)	1,8 m/s	39BMLS07500A

CODE PHASING OUT	NEW	Cu mm	Cu inch	L mm	L inch	L min mm	L min inch	F0 Initial force daN	F0 lb	F Cls daN	F Cls lb	$F1_i$ * End force daN	$F1_i$ lb	$F1_p$ ** End force daN	$F1_p$ lb	V0 cm³	V0 in³	~Kg	~lb	PED 2014/68/EU
LS 9500 - 025 - A	LS 9500-025 - B	25	0.98	205	8.07	180	7.09					13835	31102	16355	36768	594,0	36.23	19,95	43.98	✓
LS 9500 - 038 - A	LS 9500-038 - B	38	1.50	231	9.09	193	7.60					14682	33006	17697	39784	797,0	48.62	21,15	46.63	✓
LS 9500 - 050 - A	LS 9500-050 - B	50	1.97	255	10.04	205	8.07	0	0	9540		15196	34162	18525	41646	784,0	47.82	21,95	48.39	✓
LS 9500 - 063 - A	LS 9500-063 - B	63,5	2.50	282	11.10	218.5	8.60	± 5%		21446		15604	35079	19188	43136	1195,0	72.90	22,75	50.16	✓
LS 9500 - 080 - A	LS 9500-080 - B	80	3.15	315	12.40	235	9.25			± 5%		15958	35875	19768	44440	1452,0	88.57	24,55	54.12	✓
LS 9500 - 100 - A	LS 9500-100 - B	100	3.94	355	13.98	255	10.04	150 bar	2175 psi	150 bar	2175 psi	16259	36552	20265	45558	1764,0	107.60	26,25	57.87	✓
LS 9500 - 125 - A	LS 9500-125 - B	125	4.92	405	15.94	280	11.02					16521	37141	20700	46535	2153,0	131.33	28,15	62.06	✓
LS 9500 - 160 - A	LS 9500-160 - B	160	6.30	475	18.70	315	12.40	+ 20 °C	+68 °F	+ 20 °C	+68 °F	16767	37694	21111	47459	2699,0	164.64	31,55	69.56	✓
LS 9500 - 200 - A	LS 9500-200 - B	200	7.87	555	21.85	355	13.98					16954	38114	21424	48163	3323,0	202.70	35,15	77.49	✓
LS 9500 - 250 - A	LS 9500-250 - B	250	9.84	655	25.79	405	15.94					17111	38467	21687	48754	4102,0	250.22	38,65	85.21	✓
LS 9500 - 300 - A	LS 9500-300 - B	300	11.81	755	29.72	455	17.91					17219	38710	21869	49163	4882,0	297.80	42,55	93.81	✓

LS

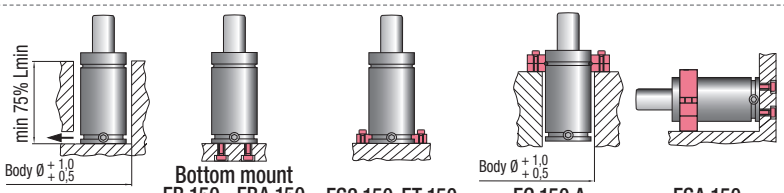

Drop-in

Bottom mount
FB 150 - FBA 150
FBB 150 - FBD 150

FS2 150-FT 150
FS2A 150-FTP 150

Body Ø + 1,0 + 0,5
FC 150 A
FCQC 150

FSA 150
FSD 150

HOW TO ORDER

p. 155

INSTALLATION GUIDELINE

p. 203

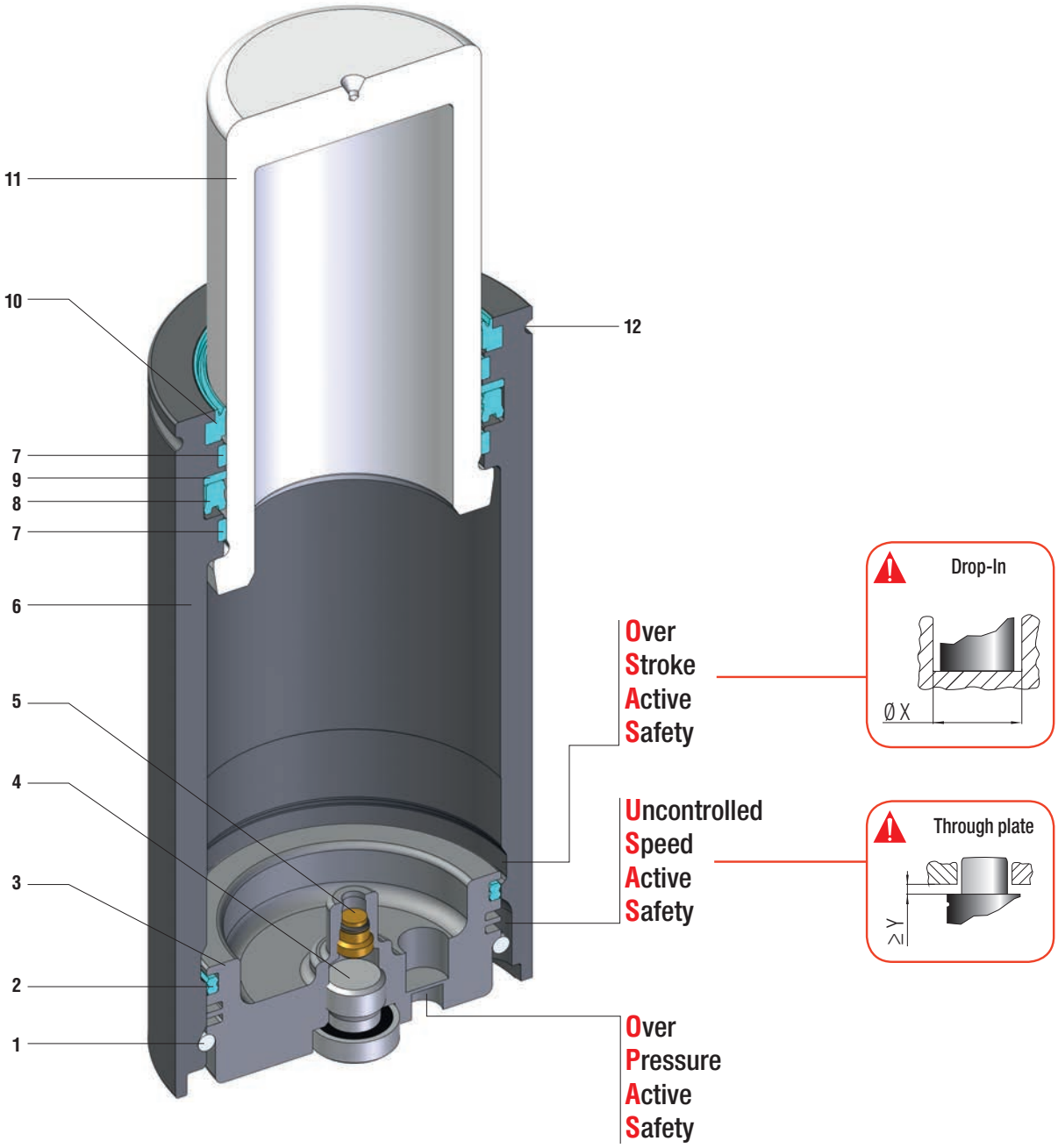

Massima forza, tenuta stelo - Maximum force, rod seal - Maximale Kraft, Kolbenstange dichtung
Forces maximale, joint de tige - Máxima fuerza, estanqueidad vástago - Força máxima, estanquidade na haste

SEALING	ROD SEAL
DESIGN	BOTTOM BASE - BODY DESIGN

1	Retaining ring	**5**	Valve	**9**	Back-up ring
2	Dual ring seal	**6**	Body	**10**	Rod wiper
3	Bottom base	**7**	Guide ring	**11**	Rod (nitrited superfinished)
4	Plug	**8**	Rod seal	**12**	Groove for secondary wiper

RANGE CHART

Model	Body Ø		Stroke Cu		Initial force F0		OSAS	USAS	OPAS	SKUDO	SW
	mm	*inch*	mm	*inch*	daN	*lb*					
ML 300	25	*0.98*	10 - 80	*0.39 - 3.15*	310	*697*	✓	✓	-	-	✓
ML 500	32	*1.26*	10 - 80	*0.39 - 3.15*	510	*1147*	✓	✓	-	-	✓
ML 1000	38	*1.50*	10 - 80	*0.39 - 3.15*	980	*2203*	✓	✓	✓	-	✓
ML 1000 N	38	*1.50*	10 - 80	*0.39 - 3.15*	980	*2203*	✓	✓	✓	-	✓
ML 1800	50	*1.97*	15 - 80	*0.59 - 3.15*	1925	*4327*	✓	✓	✓	-	✓
ML 1800 N	50	*1.97*	15 - 80	*0.59 - 3.15*	1925	*4327*	✓	✓	✓	-	✓
ML 3000	63	*2.48*	15 - 80	*0.59 - 3.15*	3180	*7149*	✓	✓	✓	-	✓
ML 3000 N	63	*2.48*	15 - 80	*0.59 - 3.15*	3180	*7149*	✓	✓	✓	-	✓
ML 4700	75	*2.95*	15 - 80	*0.59 - 3.15*	4925	*11701*	✓	✓	✓	-	✓
ML 4700 N	75	*2.95*	15 - 80	*0.59 - 3.15*	4925	*11701*	✓	✓	✓	-	✓
ML 7500	95	*3.74*	15 - 80	*0.59 - 3.15*	7700	*17310*	✓	✓	✓	-	✓
ML 7500 N	95	*3.74*	15 - 80	*0.59 - 3.15*	7700	*17310*	✓	✓	✓	-	✓
ML 12000	120	*4.72*	15 - 80	*0.59 - 3.15*	12720	*28595*	✓	✓	✓	-	✓
ML 12000 N	120	*4.72*	15 - 80	*0.59 - 3.15*	12720	*28595*	✓	✓	✓	-	✓

✓ Built-in as standard ✓ Optional upon request

HOW TO ORDER

Series — Revision code

ML 1800-050-D-E-W

Model — Stroke — Version

Available versions

ML 1800-050-D

Standard code

Self contained

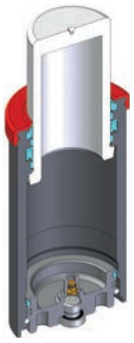

ML 1800-050-D-W

Add "-W" to standard code

Self contained

+

Secondary wiper

ML 1800-050-D-N

Add "-N" to standard code

Linkable

ML 1800-050-D-N-W

Add "-N-W" to standard code

Linkable

+

Secondary wiper

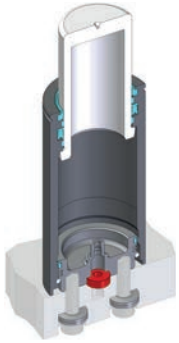

ML 1800-050-D-E

Add "-E" to standard code

Easy Manifold

ML 1800-050-D-E-W

Add "-E-W" to standard code

Easy Manifold

+

Secondary wiper

ML 300

SPECIAL SPRINGS

SW

ACTIVE SAFETY

OSAS

USAS

Il nuovo codice sarà fornito solo ad esaurimento del vecchio

The new code will be supplied only when the old will be out of stock

Der neue Kode wird geliefert nur wenn der alte nicht mehr im Lager ist

Le nouveau code sera fourni uniquement lorsque le vieux stock sera ecoulé

El nuevo código será suministrado sólo cuando el viejo está fuera de stock

O novo código irá ser fornecido apenas quando o antigo esgotar stock

*** $F1_i$ =** Isothermal end force at 100% Cu p. 18

**** $F1_p$ =** Polytrophic end force at 100% Cu

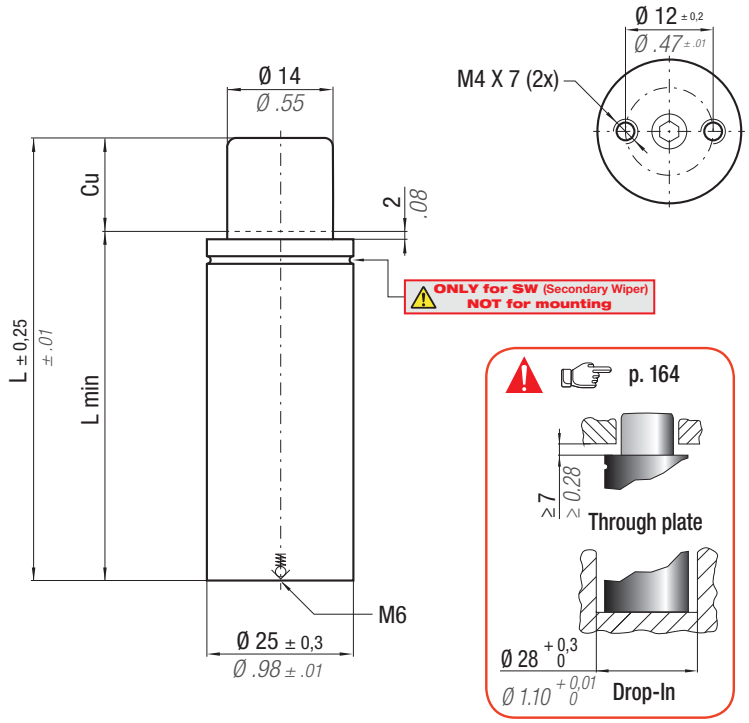

N_2	°F 32 - 176 / °C 0 - 80	ΔP	P max	P min	S	SPM	Max Speed	Maintenance kit
		± 0,33 %/°C	200 bar *2900 psi*	20 bar *290 psi*	1,54 cm² *0.239 in²*	~ 40 - 80 (at 20°C)	1,6 m/s	Disposable

CODE PHASING OUT from 05/2019	NEW	Cu mm	Cu inch	L mm	L inch	L min mm	L min inch	Fo Initial force daN	Fo lb	$F1_i$ * End force daN	$F1_i$ lb	$F1_p$ ** End force daN	$F1_p$ lb	Vo cm³	Vo in³	~Kg	~lb	PED 2014/68/EU
ML 300 - 010 - C	ML 300 - 010 - D	10	0.39	75	2.95	65	2.56	310 ± 5%	697	424	954	476	1070	7,0	0.43	0,17	0.37	✓
ML 300 - 015 - C	ML 300 - 015 - D	15	0.59	85	3.35	70	2.76			460	1034	524	1178	9,0	0.55	0,18	0.40	✓
ML 300 - 025 - C	ML 300 - 025 - D	25	0.98	105	4.13	80	3.15			509	1143	592	1331	12,0	0.73	0,21	0.46	✓
ML 300 - 038 - C	ML 300 - 038 - D	38	1.50	130	5.12	92	3.62	200 bar *2900 psi*		555	1248	658	1479	16,0	0.98	0,24	0.53	✓
ML 300 - 050 - C	ML 300 - 050 - D	50	1.97	155	6.10	105	4.13			572	1286	682	1533	20,0	1.22	0,27	0.60	✓
ML 300 - 063 - C	ML 300 - 063 - D	63	2.48	185	7.28	122	4.80			569	1279	678	1524	26,0	1.59	0,31	0.68	✓
ML 300 - 080 - C	ML 300 - 080 - D	80	3.15	220	8.66	140	5.51	+20 °C	+68 °F	584	1313	699	1571	32,0	1.95	0,35	0.77	✓

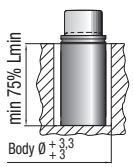

Drop-In

Bottom mount

HOW TO ORDER p. 165

INSTALLATION GUIDELINE p. 203

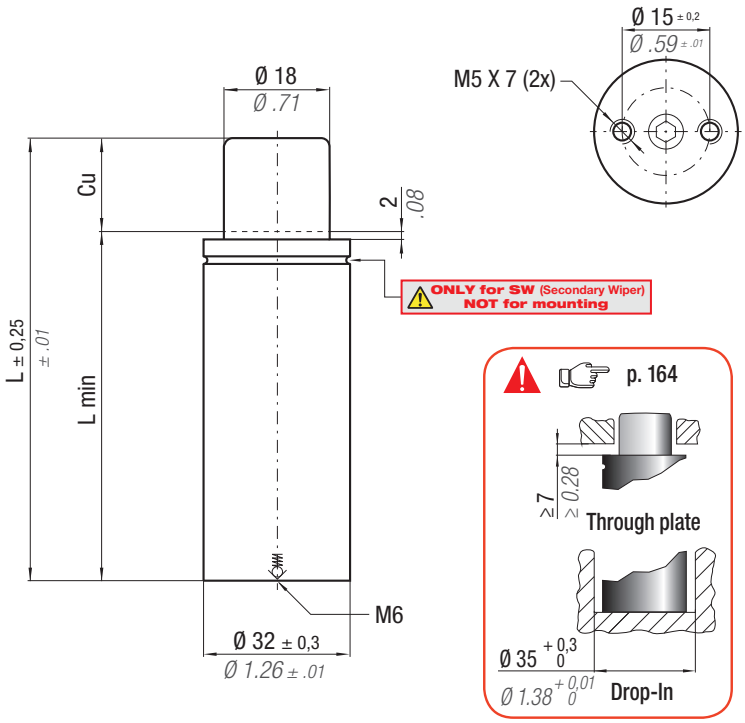

Il nuovo codice sarà fornito solo ad esaurimento del vecchio

The new code will be supplied only when the old will be out of stock

Der neue Kode wird geliefert nur wenn der alte nicht mehr im Lager ist

Le nouveau code sera fourni uniquement lorsque le vieux stock sera ecoulé

El nuevo código será suministrado sólo cuando el viejo está fuera de stock

O novo código irá ser fornecido apenas quando o antigo esgotar stock

* $F1_i$ = Isothermal end force at 100% Cu

p. 18

** $F1_p$ = Polytrophic end force at 100% Cu

SW

ACTIVE SAFETY

OSAS

USAS

N_2	°F 32 - 176 / °C 0 - 80	ΔP	P max	P min	S	SPM	Max Speed	Maintenance kit
		± 0,33 %/°C	200 bar *2900 psi*	20 bar *290 psi*	2,54 cm² *0.394 in²*	~ 40 - 80 (at 20°C)	1,6 m/s	Disposable

CODE PHASING OUT from 05/2019	NEW	Cu mm	Cu *inch*	L mm	L *inch*	L min mm	L min *inch*	F0 Initial force daN	F0 *lb*	$F1_i$ End force * daN	$F1_i$ *lb*	$F1_p$ End force ** daN	$F1_p$ *lb*	V0 cm³	V0 *in³*	~Kg	~*lb*	PED 2014/68/EU
ML 500 - 010 - C	ML 500 - 010 - D	10	*0.39*	75	*2.95*	65	*2.56*	510 ± 5%	*1147*	708	*1592*	796	*1789*	11,0	*0.67*	0,28	*0.62*	✓
ML 500 - 015 - C	ML 500 - 015 - D	15	*0.59*	85	*3.35*	70	*2.76*			763	*1715*	871	*1958*	14,0	*0.85*	0,30	*0.66*	✓
ML 500 - 025 - C	ML 500 - 025 - D	25	*0.98*	105	*4.13*	80	*3.15*			835	*1877*	971	*2183*	20,0	*1.22*	0,34	*0.75*	✓
ML 500 - 038 - C	ML 500 - 038 - D	38	*1.50*	130	*5.12*	92	*3.62*	200 bar *2900 psi*		902	*2028*	1065	*2394*	27,0	*1.65*	0,39	*0.86*	✓
ML 500 - 050 - C	ML 500 - 050 - D	50	*1.97*	155	*6.10*	105	*4.13*			923	*2075*	1095	*2462*	35,0	*2.14*	0,43	*0.95*	✓
ML 500 - 063 - C	ML 500 - 063 - D	63	*2.48*	190	*7.48*	127	*5.00*			881	*1981*	1035	*2327*	47,0	*2.87*	0,51	*1.12*	✓
ML 500 - 080 - C	ML 500 - 080 - D	80	*3.15*	225	*8.86*	145	*5.71*	+20 °C *+68 °F*		904	*2032*	1069	*2403*	57,0	*3.48*	0,57	*1.26*	✓

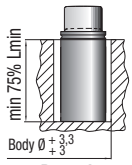

Drop-In

Bottom mount

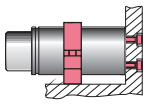

FSA 32 - FSD 32
FSF 32

HOW TO ORDER

p. 165

INSTALLATION GUIDELINE

p. 203

ML 1000

SPECIAL SPRINGS

SW

ACTIVE SAFETY

OSAS

USAS

OPAS

Il nuovo codice sarà fornito solo ad esaurimento del vecchio

The new code will be supplied only when the old will be out of stock

Der neue Kode wird geliefert nur wenn der alte nicht mehr im Lager ist

Le nouveau code sera fourni uniquement lorsque le vieux stock sera ecoulé

El nuevo código será suministrado sólo cuando el viejo está fuera de stock

O novo código irá ser fornecido apenas quando o antigo esgotar stock

*** $F1_i$ =** Isothermal end force at 100% Cu p. 18

**** $F1_p$ =** Polytrophic end force at 100% Cu

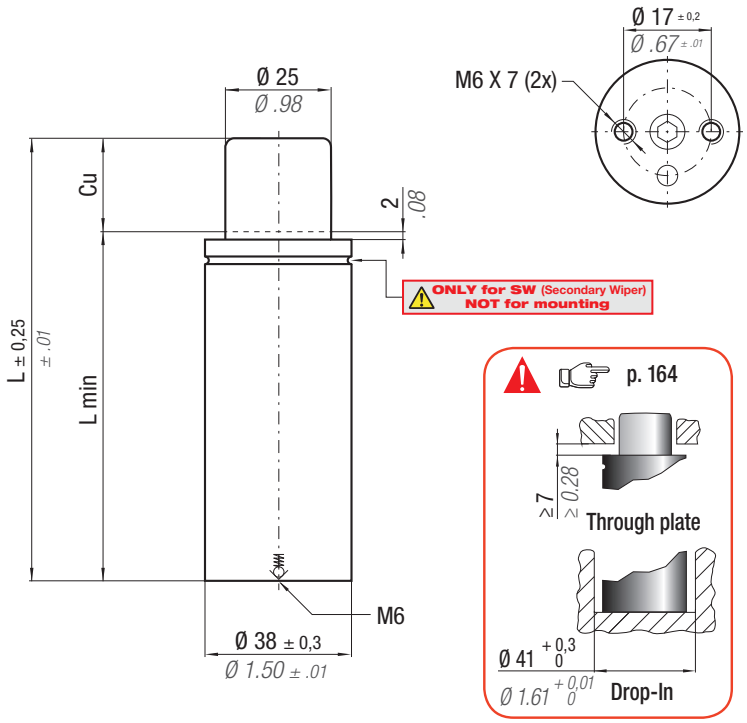

N2	°F 32 - 176 / °C 0 - 80	ΔP	P max	P min	S	SPM	Max Speed	Maintenance kit
		± 0,33 %/°C	200 bar *2900 psi*	20 bar *290 psi*	4,91 cm² *0.761 in²*	~ 40 - 80 (at 20°C)	1,6 m/s	39BMML01000C

CODE PHASING OUT from 05/2019	NEW	Cu mm	Cu *inch*	L mm	L *inch*	L min mm	L min *inch*	F0 Initial force daN	F0 *lb*	$F1_i$ * End force daN	$F1_i$ *lb*	$F1_p$ ** End force daN	$F1_p$ *lb*	V0 cm³	V0 *in³*	~Kg	*~lb*	PED 2014/68/EU
ML 1000 - 010 - C	ML 1000 - 010 - D	10	*0.39*	75	*2.95*	65	*2.56*	980 ± 5%	*2203*	1371	*3081*	1542	*3467*	22,0	*1.34*	0,37	*0.82*	✓
ML 1000 - 015 - C	ML 1000 - 015 - D	15	*0.59*	85	*3.35*	70	*2.76*			1500	*3372*	1719	*3864*	27,0	*1.65*	0,39	*0.86*	✓
ML 1000 - 025 - C	ML 1000 - 025 - D	25	*0.98*	105	*4.13*	80	*3.15*			1687	*3793*	1981	*4453*	36,0	*2.20*	0,45	*0.99*	✓
ML 1000 - 038 - C	ML 1000 - 038 - D	38	*1.50*	135	*5.31*	97	*3.82*	200 bar *2900 psi*		1768	*3974*	2095	*4710*	52,0	*3.17*	0,53	*1.17*	✓
ML 1000 - 050 - C	ML 1000 - 050 - D	50	*1.97*	160	*6.30*	110	*4.33*			1854	*4169*	2220	*4991*	64,0	*3.90*	0,60	*1.32*	✓
ML 1000 - 063 - C	ML 1000 - 063 - D	63	*2.48*	205	*8.07*	142	*5.59*			1708	*3839*	2010	*4519*	90,0	*5.49*	0,73	*1.61*	✓
ML 1000 - 080 - C	ML 1000 - 080 - D	80	*3.15*	240	*9.45*	160	*6.30*	+20 °C	*+68 °F*	1790	*4024*	2127	*4782*	107,0	*6.53*	0,82	*1.81*	✓

KIT FOR LINKING

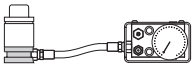

code: 39FML01000C

Sostituire ogni 1.000.000 di cicli. Remplacez à chaque million de cycles.
Replace every 1 million cycles. Reemplazar cada 1 millón de ciclos.
Nach 1 Mio. Hübe austauschen. Substituir a cada 1 milhão de ciclos.

Bottom base dimension

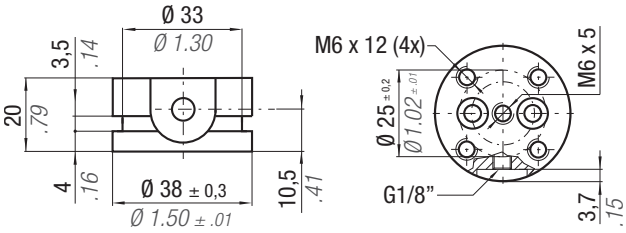

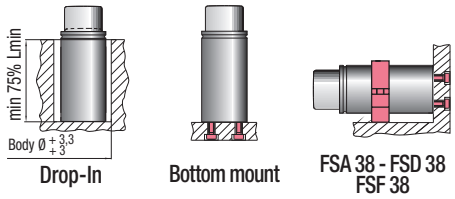

HOW TO ORDER p. 165

INSTALLATION GUIDELINE p. 203

ML 1000 N
linkable G1/8”

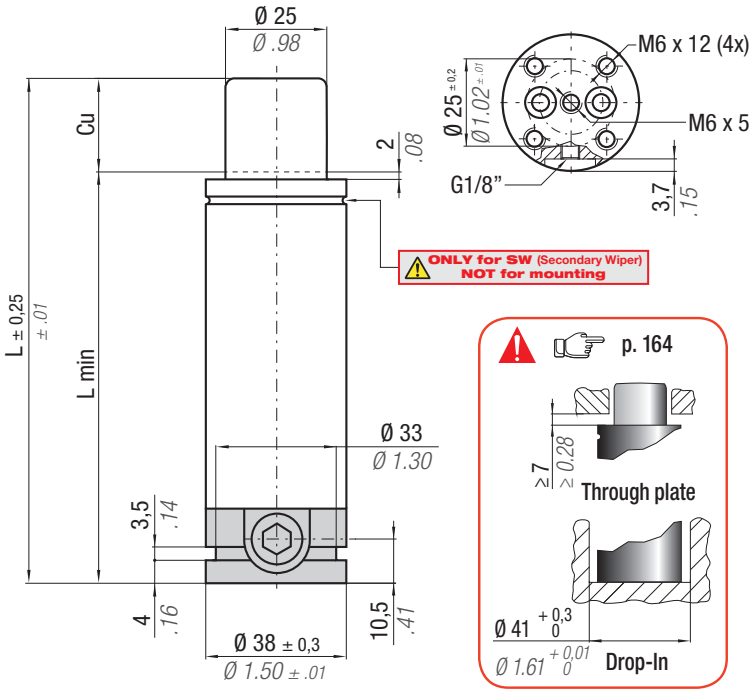

Il nuovo codice sarà fornito solo ad esaurimento del vecchio

The new code will be supplied only when the old will be out of stock

Der neue Kode wird geliefert nur wenn der alte nicht mehr im Lager ist

Le nouveau code sera fourni uniquement lorsque le vieux stock sera ecoulé

El nuevo código será suministrado sólo cuando el viejo está fuera de stock

O novo código irá ser fornecido apenas quando o antigo esgotar stock

* $F1_i$ = Isothermal end force at 100% Cu

p. 18

** $F1_p$ = Polytrophic end force at 100% Cu

SW

ACTIVE SAFETY

OSAS

USAS

OPAS

N_2	°F 32 - 176	°C 0 - 80	ΔP	P max	P min	S	SPM	Max Speed	Maintenance kit
			± 0,33 %/°C	200 bar *2900 psi*	20 bar *290 psi*	4,91 cm² *0.761 in²*	~ 40 - 80 (at 20°C)	1,6 m/s	39BMML01000C

CODE PHASING OUT from 05/2019	NEW	Cu mm	Cu inch	L mm	L inch	L min mm	L min inch	F0 Initial force daN	F0 lb	$F1_i$ End force * daN	$F1_i$ lb	$F1_p$ End force ** daN	$F1_p$ lb	V0 cm³	V0 in³	~Kg	~lb	PED 2014/68/EU
ML1000-010-C-N	ML1000-010-D-N	10	0.39	95	3.74	85	3.35	980 ± 5%	2203	1371	3081	1542	3467	22,0	1.34	0,52	1.15	✓
ML1000-015-C-N	ML1000-015-D-N	15	0.59	105	4.13	90	3.54			1500	3372	1719	3864	27,0	1.65	0,55	1.21	✓
ML1000-025-C-N	ML1000-025-D-N	25	0.98	125	4.92	100	3.94			1687	3793	1981	4453	36,0	2.20	0,60	1.32	✓
ML1000-038-C-N	ML1000-038-D-N	38	1.50	155	6.10	117	4.61	200 bar *2900 psi*		1768	3974	2095	4710	52,0	3.17	0,68	1.50	✓
ML1000-050-C-N	ML1000-050-D-N	50	1.97	180	7.09	130	5.12			1854	4169	2220	4991	64,0	3.90	0,75	1.65	✓
ML1000-063-C-N	ML1000-063-D-N	63	2.48	225	8.86	162	6.38			1708	3839	2010	4519	90,0	5.49	0,88	1.94	✓
ML1000-080-C-N	ML1000-080-D-N	80	3.15	260	10.24	180	7.09	+20 °C	*+68 °F*	1790	4024	2127	4782	107,0	6.53	0,98	2.16	✓

ML

SERVICE BOX

code: 39SKML01000A

Sostituire ogni 1.000.000 di cicli.
Replace every 1 million cycles.
Nach 1 Mio. Hübe austauschen.
Remplacez à chaque million de cycles.
Reemplazar cada 1 millón de ciclos.
Substituir a cada 1 milhão de ciclos.

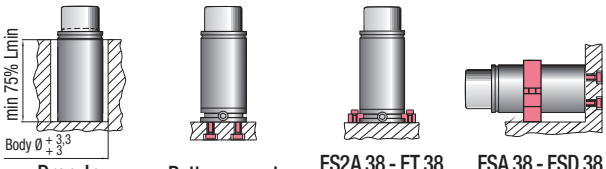

HOW TO ORDER

p. 165

INSTALLATION GUIDELINE

p. 203

ML 1800

SPECIAL SPRINGS

SW

ACTIVE SAFETY

OSAS

USAS

OPAS

Il nuovo codice sarà fornito solo ad esaurimento del vecchio

The new code will be supplied only when the old will be out of stock

Der neue Kode wird geliefert nur wenn der alte nicht mehr im Lager ist

Le nouveau code sera fourni uniquement lorsque le vieux stock sera ecoulé

El nuevo código será suministrado sólo cuando el viejo está fuera de stock

O novo código irá ser fornecido apenas quando o antigo esgotar stock

easy MANIFOLD p. 241

*** $F1_i$ =** Isothermal end force at 100% Cu p. 18

**** $F1_p$ =** Polytrophic end force at 100% Cu

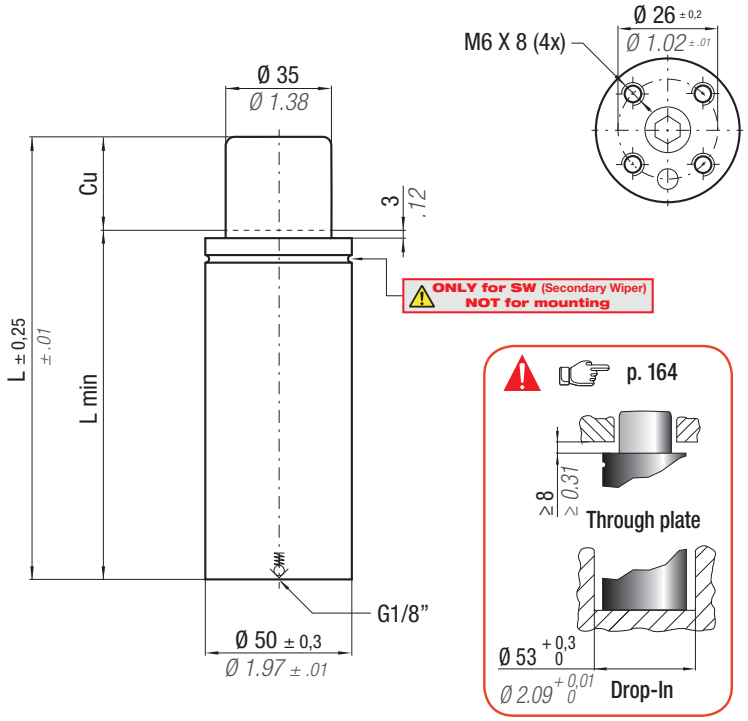

N2	°F 32 - 176 / °C 0 - 80	ΔP	P max	P min	S	SPM	Max Speed	Maintenance kit
		± 0,33 %/°C	200 bar *2900 psi*	20 bar *290 psi*	9,62 cm² *1.491 in²*	~ 40 - 80 (at 20°C)	1,6 m/s	39BMML01800C

CODE PHASING OUT from 05/2019	NEW	Cu mm	Cu *inch*	L mm	L *inch*	L min mm	L min *inch*	F0 Initial force daN	F0 *lb*	$F1_i$ * End force daN	$F1_i$ *lb*	$F1_p$ ** End force daN	$F1_p$ *lb*	V0 cm³	V0 *in³*	~Kg	*~lb*	PED 2014/68/EU
ML 1800 - 015 - C	ML 1800 - 015 - D	15	*0.59*	95	*3.74*	80	*3.15*	1925 ± 5%	*4327*	2818	*6334*	3200	*7194*	57,0	*3.48*	0,76	*1.68*	✓
ML 1800 - 025 - C	ML 1800 - 025 - D	25	*0.98*	115	*4.53*	90	*3.54*			3182	*7154*	3706	*8331*	75,0	*4.58*	0,85	*1.87*	✓
ML 1800 - 038 - C	ML 1800 - 038 - D	38	*1.50*	150	*5.91*	112	*4.41*			3257	*7321*	3811	*8567*	111,0	*6.77*	1,01	*2.23*	✓
ML 1800 - 050 - C	ML 1800 - 050 - D	50	*1.97*	175	*6.89*	125	*4.92*	200 bar *2900 psi*		3451	*7758*	4087	*9188*	134,0	*8.17*	1,12	*2.47*	✓
ML 1800 - 063 - C	ML 1800 - 063 - D	63	*2.48*	205	*8.07*	142	*5.59*			3546	*7972*	4224	*9496*	163,0	*9.94*	1,26	*2.78*	✓
ML 1800 - 080 - C	ML 1800 - 080 - D	80	*3.15*	245	*9.65*	165	*6.50*	+20 °C	*+68 °F*	3619	*8136*	4329	*9732*	201,0	*12.26*	1,44	*3.17*	✓

KIT FOR LINKING

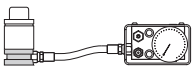

code: 39FML01800B

Sostituire ogni 1.000.000 di cicli.
Replace every 1 million cycles.
Nach 1 Mio. Hübe austauschen.
Remplacez à chaque million de cycles.
Reemplazar cada 1 millón de ciclos.
Substituir a cada 1 milhão de ciclos.

Bottom base dimension

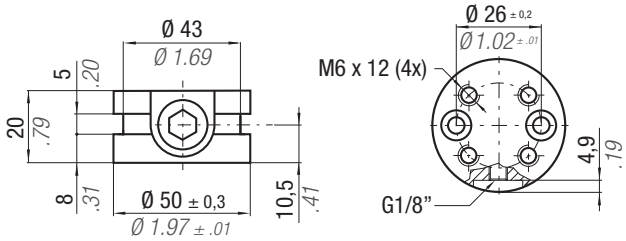

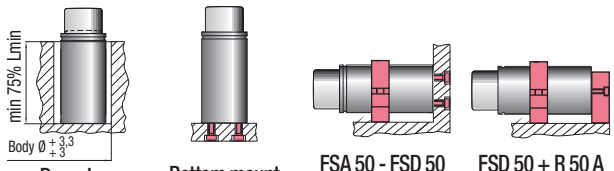

HOW TO ORDER p. 165

INSTALLATION GUIDELINE p. 203

ML 1800 N
linkable G1/8”

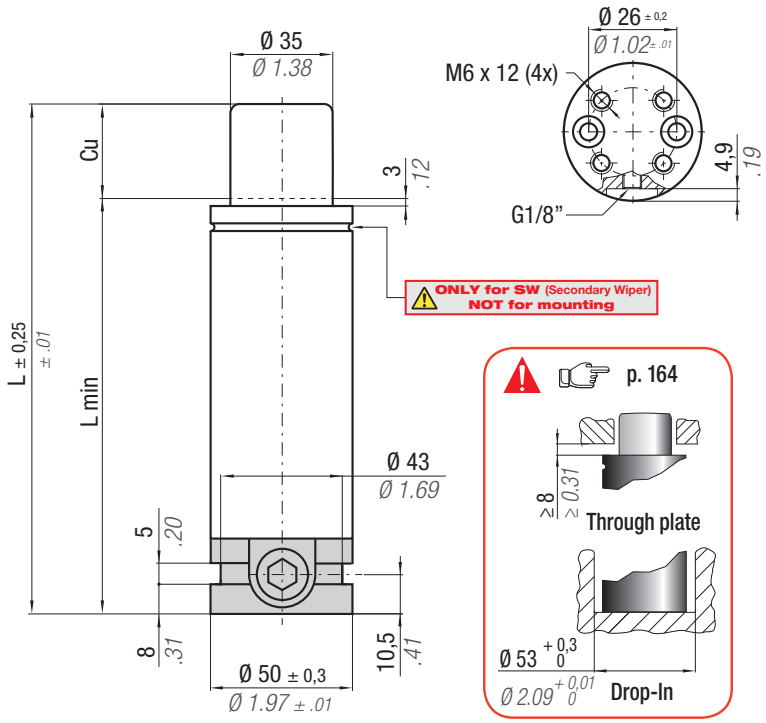

Il nuovo codice sarà fornito solo ad esaurimento del vecchio

The new code will be supplied only when the old will be out of stock

Der neue Kode wird geliefert nur wenn der alte nicht mehr im Lager ist

Le nouveau code sera fourni uniquement lorsque le vieux stock sera ecoulé

El nuevo código será suministrado sólo cuando el viejo está fuera de stock

O novo código irá ser fornecido apenas quando o antigo esgotar stock

* $F1_i$ = Isothermal end force at 100% Cu — p. 18

** $F1_p$ = Polytrophic end force at 100% Cu

SW

ACTIVE SAFETY

OSAS

USAS

OPAS

N2	°F 32 - 176 / °C 0 - 80	ΔP	P max	P min	S	SPM	Max Speed	Maintenance kit
		± 0,33 %/°C	200 bar / 2900 psi	20 bar / 290 psi	9,62 cm² / 1.491 in²	~ 40 - 80 (at 20°C)	1,6 m/s	39BMML01800C

CODE PHASING OUT from 05/2019	NEW	Cu mm	Cu inch	L mm	L inch	L min mm	L min inch	F0 Initial force daN	F0 lb	$F1_i$ * End force daN	$F1_i$ lb	$F1_p$ ** End force daN	$F1_p$ lb	V0 cm³	V0 in³	~Kg	~lb	PED 2014/68/EU
ML1800-015-C-N	ML1800-015-D-N	15	0.59	115	4.53	100	3.94	1925	4327	2818	6334	3200	7194	57,0	3.48	1,03	2.27	✓
ML1800-025-C-N	ML1800-025-D-N	25	0.98	135	5.31	110	4.33	± 5%		3182	7154	3706	8331	75,0	4.58	1,12	2.47	✓
ML1800-038-C-N	ML1800-038-D-N	38	1.50	170	6.69	132	5.20	200 bar 2900 psi		3257	7321	3811	8567	111,0	6.77	1,28	2.82	✓
ML1800-050-C-N	ML1800-050-D-N	50	1.97	195	7.68	145	5.71			3451	7758	4087	9188	134,0	8.17	1,39	3.06	✓
ML1800-063-C-N	ML1800-063-D-N	63	2.48	225	8.86	162	6.38			3546	7972	4224	9496	163,0	9.94	1,53	3.37	✓
ML1800-080-C-N	ML1800-080-D-N	80	3.15	265	10.43	185	7.28	+20 °C	+68 °F	3619	8136	4329	9732	201,0	12.26	1,71	3.77	✓

ML

SERVICE BOX

code: 39SKML01800A

Sostituire ogni 1.000.000 di cicli. Remplacez à chaque million de cycles.
Replace every 1 million cycles. Reemplazar cada 1 millón de ciclos.
Nach 1 Mio. Hübe austauschen. Substituir a cada 1 milhão de ciclos.

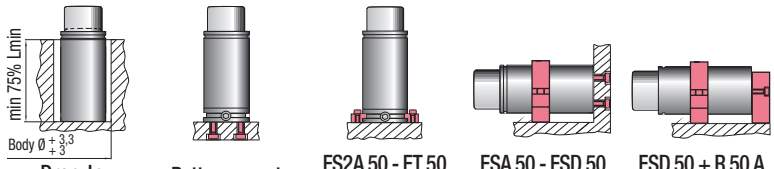

HOW TO ORDER p. 165

INSTALLATION GUIDELINE p. 203

ML 3000

SW

ACTIVE SAFETY

OSAS

USAS

OPAS

Il nuovo codice sarà fornito solo ad esaurimento del vecchio

The new code will be supplied only when the old will be out of stock

Der neue Kode wird geliefert nur wenn der alte nicht mehr im Lager ist

Le nouveau code sera fourni uniquement lorsque le vieux stock sera ecoulé

El nuevo código será suministrado sólo cuando el viejo está fuera de stock

O novo código irá ser fornecido apenas quando o antigo esgotar stock

easy MANIFOLD p. 241

*** $F1_i$ =** Isothermal end force at 100% Cu p. 18

**** $F1_p$ =** Polytrophic end force at 100% Cu

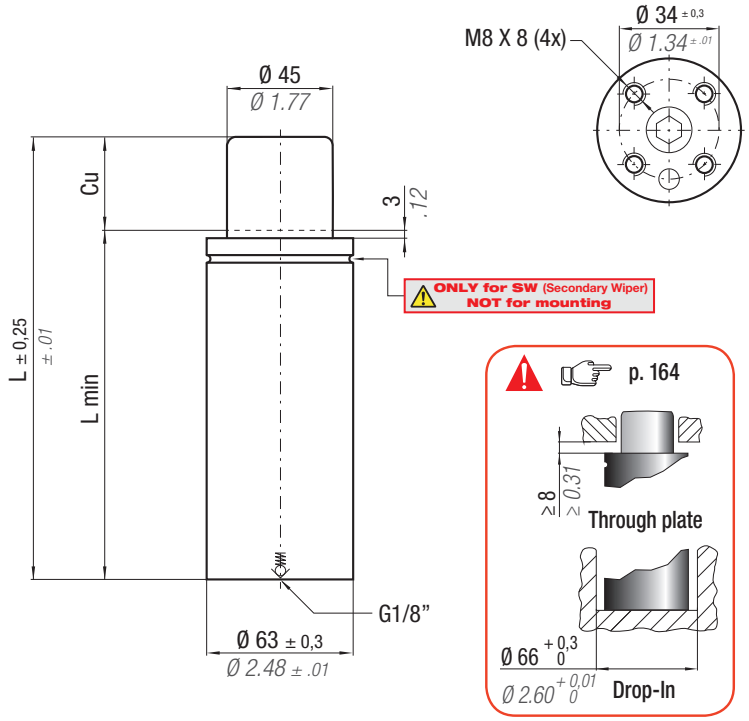

N2	°F 32 - 176 / °C 0 - 80	ΔP	P max	P min	S	SPM	Max Speed	Maintenance kit
		± 0,33 %/°C	200 bar *2900 psi*	20 bar *290 psi*	15,90 cm² *2.464 in²*	~ 40 - 80 (at 20°C)	1,6 m/s	39BMML03000B

CODE PHASING OUT from 05/2019	NEW	Cu mm	Cu inch	L mm	L inch	L min mm	L min inch	F0 Initial force daN	F0 lb	$F1_i$ * End force daN	$F1_i$ lb	$F1_p$ ** End force daN	$F1_p$ lb	V0 cm³	V0 in³	~Kg	~lb	PED 2014/68/EU
ML 3000 - 015 - C	ML 3000 - 015 - D	15	0.59	100	3.94	85	3.35	3180 ± 5%	7149	4450	10003	5007	11256	106,0	6.47	1,25	2.76	✓
ML 3000 - 025 - C	ML 3000 - 025 - D	25	0.98	120	4.72	95	3.74			4996	11231	5757	12942	136,0	8.30	1,38	3.04	✓
ML 3000 - 038 - C	ML 3000 - 038 - D	38	1.50	150	5.91	112	4.41	200 bar *2900 psi*		5340	12005	6239	14026	185,0	11.29	1,57	3.46	✓
ML 3000 - 050 - C	ML 3000 - 050 - D	50	1.97	180	7.09	130	5.12			5468	12292	6419	14430	235,0	14.34	1,78	3.92	✓
ML 3000 - 063 - C	ML 3000 - 063 - D	63	2.48	210	8.27	147	5.79			5633	12664	6654	14959	283,0	17.26	1,98	4.37	✓
ML 3000 - 080 - C	ML 3000 - 080 - D	80	3.15	250	9.84	170	6.69	+20 °C	+68 °F	5766	12963	6844	15386	349,0	21.29	2,24	4.94	✓

KIT FOR LINKING

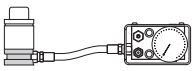

code: 39FML03000B

Sostituire ogni 1.000.000 di cicli.
Replace every 1 million cycles.
Nach 1 Mio. Hübe austauschen.
Remplacez à chaque million de cycles.
Reemplazar cada 1 millón de ciclos.
Substituir a cada 1 milhão de ciclos.

Bottom base dimension

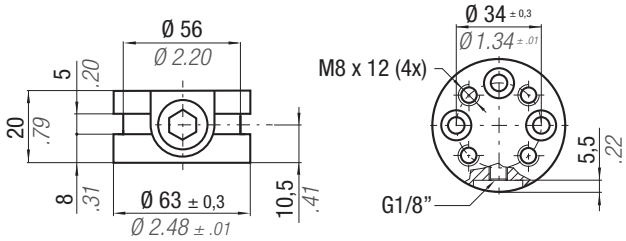

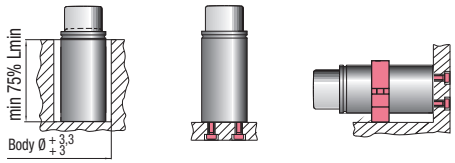

HOW TO ORDER p. 165

INSTALLATION GUIDELINE p. 203

ML 3000 N
linkable G1/8”

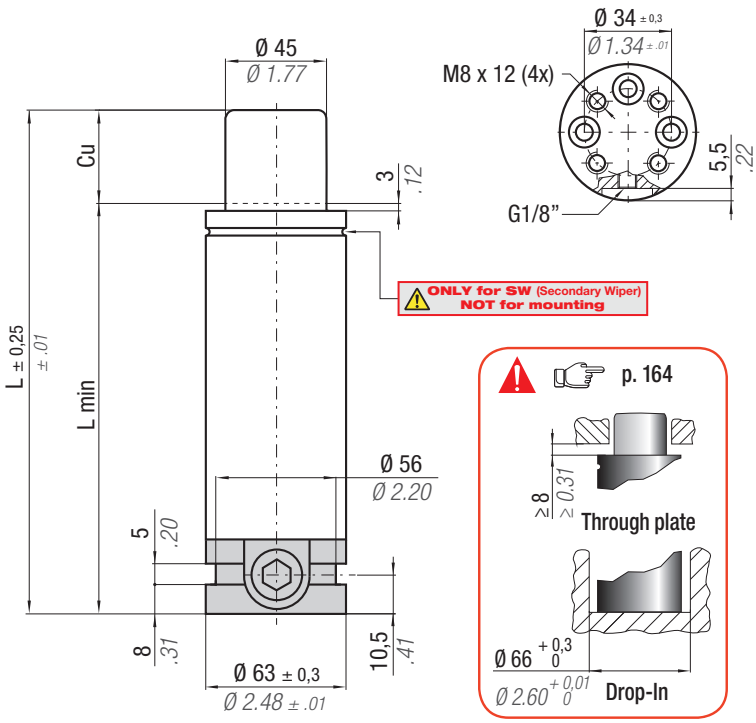

Il nuovo codice sarà fornito solo ad esaurimento del vecchio

The new code will be supplied only when the old will be out of stock

Der neue Kode wird geliefert nur wenn der alte nicht mehr im Lager ist

Le nouveau code sera fourni uniquement lorsque le vieux stock sera ecoulé

El nuevo código será suministrado sólo cuando el viejo está fuera de stock

O novo código irá ser fornecido apenas quando o antigo esgotar stock

* $F1_i$ = Isothermal end force at 100% Cu p. 18

** $F1_p$ = Polytrophic end force at 100% Cu

SW

ACTIVE SAFETY

OSAS

USAS

OPAS

N_2	°F 32 - 176	°C 0 - 80	ΔP ± 0,33 %/°C	P max 200 bar 2900 psi	P min 20 bar 290 psi	S 15,90 cm² 2.464 in²	SPM ~ 40 - 80 (at 20°C)	Max Speed 1,6 m/s	Maintenance kit 39BMML03000B

CODE PHASING OUT from 05/2019	NEW	Cu mm	Cu inch	L mm	L inch	L min mm	L min inch	F0 Initial force daN	F0 lb	$F1_i$ End force * daN	$F1_i$ lb	$F1_p$ End force ** daN	$F1_p$ lb	V0 cm³	V0 in³	~Kg	~lb	PED 2014/68/EU
ML3000-015-C-N	ML3000-015-D-N	15	0.59	120	4.72	105	4.13	3180	7149	4450	10003	5007	11256	106,0	6.47	1,67	3.68	✓
ML3000-025-C-N	ML3000-025-D-N	25	0.98	140	5.51	115	4.53	± 5%		4996	11231	5757	12942	136,0	8.30	1,80	3.97	✓
ML3000-038-C-N	ML3000-038-D-N	38	1.50	170	6.69	132	5.20	200 bar 2900 psi		5340	12005	6239	14026	185,0	11.29	2,00	4.41	✓
ML3000-050-C-N	ML3000-050-D-N	50	1.97	200	7.87	150	5.91			5468	12292	6419	14430	235,0	14.34	2,20	4.85	✓
ML3000-063-C-N	ML3000-063-D-N	63	2.48	230	9.06	167	6.57			5633	12664	6654	14959	283,0	17.26	2,40	5.29	✓
ML3000-080-C-N	ML3000-080-D-N	80	3.15	270	10.63	190	7.48	+20 °C	+68 °F	5766	12963	6844	15386	349,0	21.29	2,66	5.86	✓

ML

SERVICE BOX

code: 39SKML03000A

Sostituire ogni 1.000.000 di cicli.
Replace every 1 million cycles.
Nach 1 Mio. Hübe austauschen.
Remplacez à chaque million de cycles.
Reemplazar cada 1 millón de ciclos.
Substituir a cada 1 milhão de ciclos.

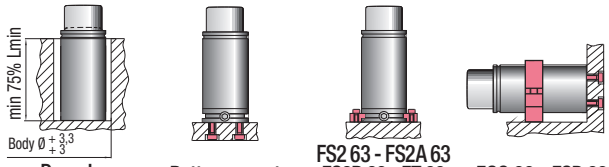

HOW TO ORDER p. 165

INSTALLATION GUIDELINE p. 203

ML 4700

SPECIAL SPRINGS

SW

ACTIVE SAFETY

OSAS

USAS

OPAS

Il nuovo codice sarà fornito solo ad esaurimento del vecchio

The new code will be supplied only when the old will be out of stock

Der neue Kode wird geliefert nur wenn der alte nicht mehr im Lager ist

Le nouveau code sera fourni uniquement lorsque le vieux stock sera ecoulé

El nuevo código será suministrado sólo cuando el viejo está fuera de stock

O novo código irá ser fornecido apenas quando o antigo esgotar stock

easy MANIFOLD p. 241

*** $F1_i$ =** Isothermal end force at 100% Cu p. 18

**** $F1_p$ =** Polytrophic end force at 100% Cu

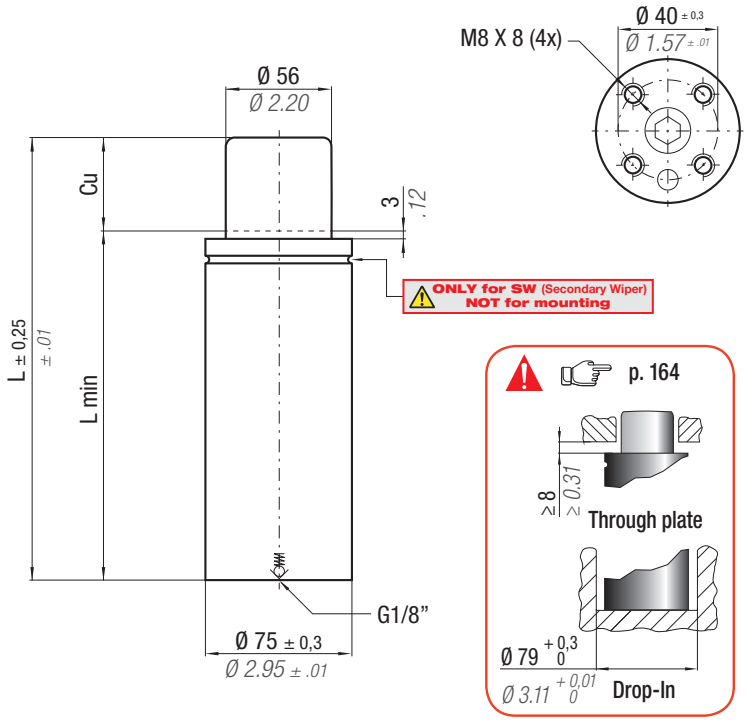

N2	°F 32 - 176 / °C 0 - 80	ΔP	P max	P min	S	SPM	Max Speed	Maintenance kit
		± 0,33 %/°C	200 bar *2900 psi*	20 bar *290 psi*	24,63 cm² *3.817 in²*	~ 30 - 70 (at 20°C)	1,6 m/s	39BMML04700C

CODE PHASING OUT from 05/2019	NEW	Cu mm	Cu inch	L mm	L inch	L min mm	L min inch	Fo Initial force daN	Fo lb	$F1_i$ * End force daN	$F1_i$ lb	$F1_p$ ** End force daN	$F1_p$ lb	Vo cm³	Vo in³	~Kg	~lb	PED 2014/68/EU
ML 4700 - 015 - C	ML 4700 - 015 - D	15	0.59	100	3.94	85	3.35	4925	11071	6966	15660	7856	17661	159,0	9.70	1,72	3.79	✓
ML 4700 - 025 - C	ML 4700 - 025 - D	25	0.98	120	4.72	95	3.74	± 5%		7858	17665	9085	20424	205,0	12.51	1,90	4.19	✓
ML 4700 - 038 - C	ML 4700 - 038 - D	38	1.50	150	5.91	112	4.41			8432	18956	9891	22236	278,0	16.96	2,17	4.78	✓
ML 4700 - 050 - C	ML 4700 - 050 - D	50	1.97	180	7.09	130	5.12	200 bar *2900 psi*		8651	19448	10201	22933	353,0	21.53	2,44	5.38	✓
ML 4700 - 063 - C	ML 4700 - 063 - D	63	2.48	210	8.27	147	5.79			8929	20073	10598	23825	425,0	25.93	2,72	6.00	✓
ML 4700 - 080 - C	ML 4700 - 080 - D	80	3.15	250	9.84	170	6.69	+20 °C	+68 °F	9155	20581	10922	24554	523,0	31.90	3,08	6.79	✓

KIT FOR LINKING

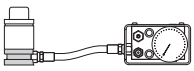

code: 39FML04700B

Seal (1x) | Washer (6x) | Screw (3x) | Bottom base (1x) | Instructions

Sostituire ogni 1.000.000 di cicli.
Replace every 1 million cycles.
Nach 1 Mio. Hübe austauschen.
Remplacez à chaque million de cycles.
Reemplazar cada 1 millón de ciclos.
Substituir a cada 1 milhão de ciclos.

Bottom base dimension

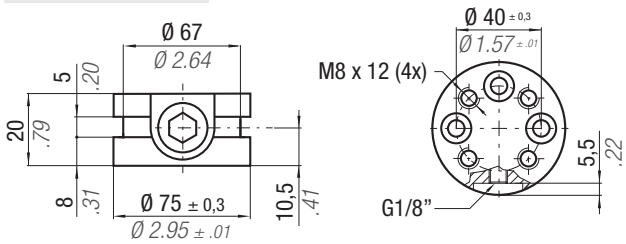

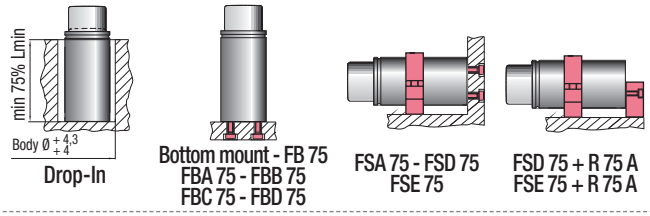

HOW TO ORDER p. 165

INSTALLATION GUIDELINE p. 203

ML 4700 N
linkable G1/8”

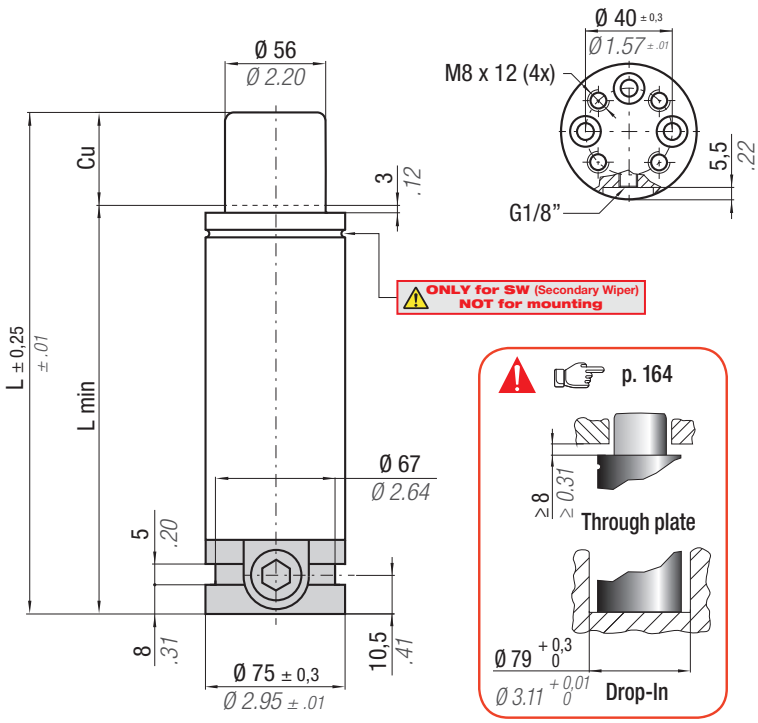

Il nuovo codice sarà fornito solo ad esaurimento del vecchio

The new code will be supplied only when the old will be out of stock

Der neue Kode wird geliefert nur wenn der alte nicht mehr im Lager ist

Le nouveau code sera fourni uniquement lorsque le vieux stock sera ecoulé

El nuevo código será suministrado sólo cuando el viejo está fuera de stock

O novo código irá ser fornecido apenas quando o antigo esgotar stock

* $F1_i$ = Isothermal end force at 100% Cu p. 18

** $F1_p$ = Polytrophic end force at 100% Cu

SW

ACTIVE SAFETY

OSAS

USAS

OPAS

N2	°F 32 - 176 / °C 0 - 80	ΔP	P max	P min	S	SPM	Max Speed	Maintenance kit
		± 0,33 %/°C	200 bar / 2900 psi	20 bar / 290 psi	24,63 cm² / 3.817 in²	~ 30 - 70 (at 20°C)	1,6 m/s	39BMML04700C

CODE PHASING OUT from 05/2019	NEW	Cu mm	Cu inch	L mm	L inch	L min mm	L min inch	F0 Initial force daN	F0 lb	$F1_i$ End force * daN	$F1_i$ lb	$F1_p$ End force ** daN	$F1_p$ lb	V0 cm³	V0 in³	~Kg	~lb	PED 2014/68/EU
ML4700-015-C-N	ML4700-015-D-N	15	0.59	120	4.72	105	4.13	4925	11071	6966	15660	7856	17661	159,0	9.70	2,34	5.16	✓
ML4700-025-C-N	ML4700-025-D-N	25	0.98	140	5.51	115	4.53	± 5%		7858	17665	9085	20424	205,0	12.51	2,51	5.53	✓
ML4700-038-C-N	ML4700-038-D-N	38	1.50	170	6.69	132	5.20	200 bar 2900 psi		8432	18956	9891	22236	278,0	16.96	2,75	6.06	✓
ML4700-050-C-N	ML4700-050-D-N	50	1.97	200	7.87	150	5.91			8651	19448	10201	22933	353,0	21.53	3,06	6.75	✓
ML4700-063-C-N	ML4700-063-D-N	63	2.48	230	9.06	167	6.57			8929	20073	10598	23825	425,0	25.93	3,33	7.34	✓
ML4700-080-C-N	ML4700-080-D-N	80	3.15	270	10.63	190	7.48	+20 °C	+68 °F	9155	20581	10922	24554	523,0	31.90	3,70	8.16	✓

ML

SERVICE BOX

code: 39SKML04700A

Sostituire ogni 1.000.000 di cicli. Replace every 1 million cycles. Nach 1 Mio. Hübe austauschen. Remplacez à chaque million de cycles. Reemplazar cada 1 millón de ciclos. Substituir a cada 1 milhão de ciclos.

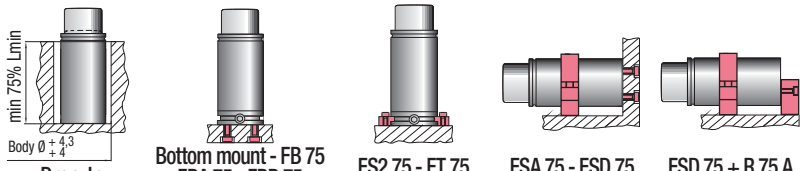

HOW TO ORDER p. 165

INSTALLATION GUIDELINE p. 203

ML 7500

SW

ACTIVE SAFETY

OSAS

USAS

OPAS

Il nuovo codice sarà fornito solo ad esaurimento del vecchio

The new code will be supplied only when the old will be out of stock

Der neue Kode wird geliefert nur wenn der alte nicht mehr im Lager ist

Le nouveau code sera fourni uniquement lorsque le vieux stock sera ecoulé

El nuevo código será suministrado sólo cuando el viejo está fuera de stock

O novo código irá ser fornecido apenas quando o antigo esgotar stock

easy MANIFOLD p. 241

*** $F1_i$ =** Isothermal end force at 100% Cu p. 18

**** $F1_p$ =** Polytrophic end force at 100% Cu

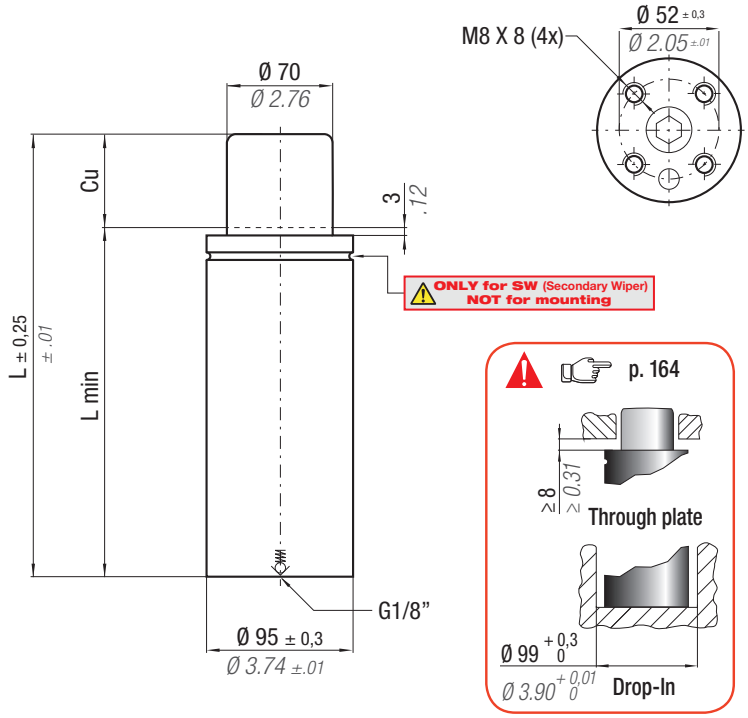

N2	°F 32 - 176 / °C 0 - 80	ΔP	P max	P min	S	SPM	Max Speed	Maintenance kit
		± 0,33 %/°C	200 bar *2900 psi*	20 bar *290 psi*	38,48 cm² *5.964 in²*	~ 20 - 60 (at 20°C)	1,6 m/s	39BMML07500C

CODE PHASING OUT from 05/2019	NEW	Cu mm	Cu inch	L mm	L inch	L min mm	L min inch	F0 Initial force daN	F0 lb	$F1_i$ * End force daN	$F1_i$ lb	$F1_p$ ** End force daN	$F1_p$ lb	V0 cm³	V0 in³	~Kg	~lb	PED 2014/68/EU
ML 7500 - 015 - C	ML 7500 - 015 - D	15	0.59	115	4.53	100	3.94	7700	17310	10289	23131	11469	25783	291,0	17.75	3,30	7.28	✓
ML 7500 - 025 - C	ML 7500 - 025 - D	25	0.98	135	5.31	110	4.33	± 5%		11499	25851	13116	29486	365,0	22.27	3,58	7.89	✓
ML 7500 - 038 - C	ML 7500 - 038 - D	38	1.50	165	6.50	127	5,00			12377	27825	14333	32222	481,0	29.34	4,01	8.84	✓
ML 7500 - 050 - C	ML 7500 - 050 - D	50	1.97	190	7.48	140	5.51	200 bar *2900 psi*		13130	29517	15391	34600	575,0	35.08	4,36	9.61	✓
ML 7500 - 063 - C	ML 7500 - 063 - D	63	2.48	220	8.66	157	6.18			13557	30477	15996	35960	691,0	42.15	4,75	10.47	✓
ML 7500 - 080 - C	ML 7500 - 080 - D	80	3.15	260	10.24	180	7.09	+20 °C	+68 °F	13910	31271	16500	37093	874,0	53.31	5,36	11.82	✓

KIT FOR LINKING

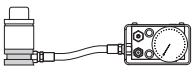

code: 39FML07500B

Sostituire ogni 1.000.000 di cicli.
Replace every 1 million cycles.
Nach 1 Mio. Hübe austauschen.
Remplacez à chaque million de cycles.
Reemplazar cada 1 millón de ciclos.
Substituir a cada 1 milhão de ciclos.

Bottom base dimension

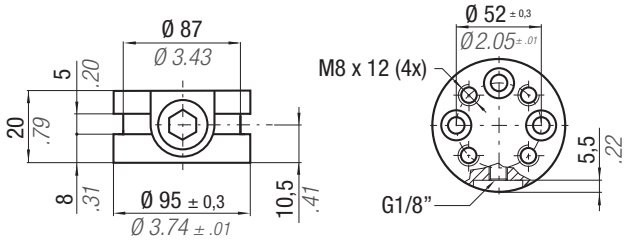

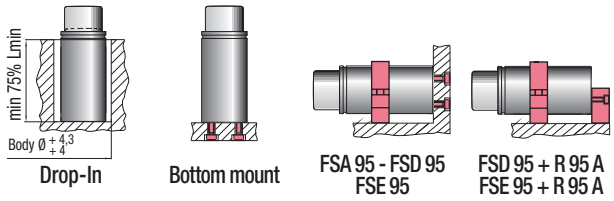

HOW TO ORDER p. 165

INSTALLATION GUIDELINE p. 203

ML 7500 N
linkable G1/8”

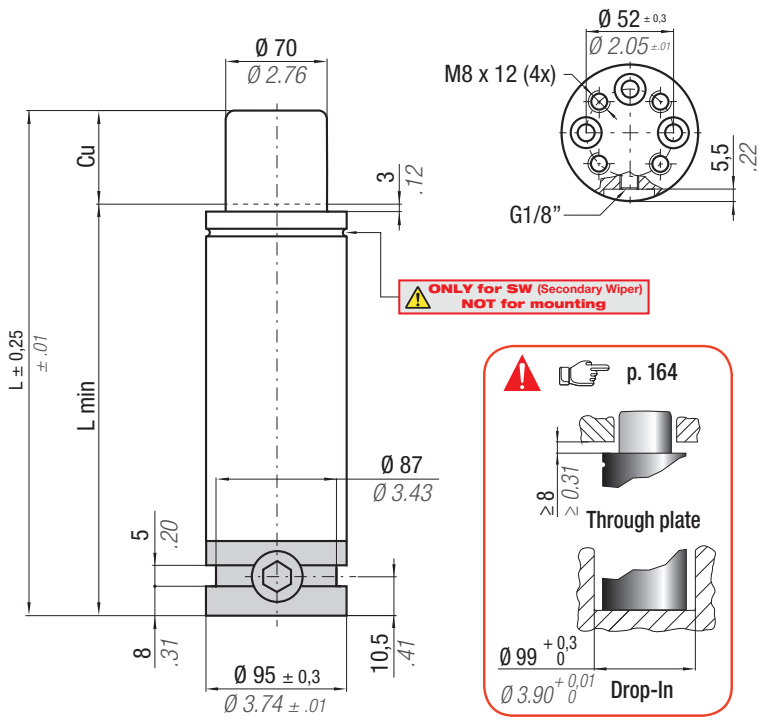

Il nuovo codice sarà fornito solo ad esaurimento del vecchio

The new code will be supplied only when the old will be out of stock

Der neue Kode wird geliefert nur wenn der alte nicht mehr im Lager ist

Le nouveau code sera fourni uniquement lorsque le vieux stock sera ecoulé

El nuevo código será suministrado sólo cuando el viejo está fuera de stock

O novo código irá ser fornecido apenas quando o antigo esgotar stock

* $F1_i$ = Isothermal end force at 100% Cu p. 18

** $F1_p$ = Polytrophic end force at 100% Cu

SW

ACTIVE SAFETY

OSAS

USAS

OPAS

N_2	°F 32 - 176 / °C 0 - 80	ΔP	P max	P min	S	SPM	Max Speed	Maintenance kit
		± 0,33 %/°C	200 bar *2900 psi*	20 bar *290 psi*	38,48 cm² *5.964 in²*	~ 20 - 60 (at 20°C)	1,6 m/s	39BMML07500C

CODE PHASING OUT from 05/2019	NEW	Cu mm	Cu inch	L mm	L inch	L min mm	L min inch	F0 Initial force daN	F0 lb	$F1_i$ End force * daN	$F1_i$ lb	$F1_p$ End force ** daN	$F1_p$ lb	V0 cm³	V0 in³	~Kg	~lb	PED 2014/68/EU
ML7500-015-C-N	ML7500-015-D-N	15	0.59	135	5.31	120	4.72	7700	17310	10289	23131	11469	25783	291,0	17.75	4,32	9.52	✓
ML7500-025-C-N	ML7500-025-D-N	25	0.98	155	6.10	130	5.12	± 5%		11499	25851	13116	29486	365,0	22.27	4,60	10.14	✓
ML7500-038-C-N	ML7500-038-D-N	38	1.50	185	7.28	147	5.79	200 bar *2900 psi*		12377	27825	14333	32222	481,0	29.34	5,03	11.09	✓
ML7500-050-C-N	ML7500-050-D-N	50	1.97	210	8.27	160	6.30			13130	29517	15391	34600	575,0	35.08	5,38	11.86	✓
ML7500-063-C-N	ML7500-063-D-N	63	2.48	240	9.45	177	6.97			13557	30477	15996	35960	691,0	42.15	5,81	12.81	✓
ML7500-080-C-N	ML7500-080-D-N	80	3.15	280	11.02	200	7.87	+20 °C	+68 °F	13910	31271	16500	37093	874,0	53.31	6,39	14.09	✓

ML

SERVICE BOX

code: 39SKML07500A

Seal (1x) | Washer (6x) | Screw (3x) | Instructions

Sostituire ogni 1.000.000 di cicli.
Replace every 1 million cycles.
Nach 1 Mio. Hübe austauschen.
Remplacez à chaque million de cycles.
Reemplazar cada 1 millón de ciclos.
Substituir a cada 1 milhão de ciclos.

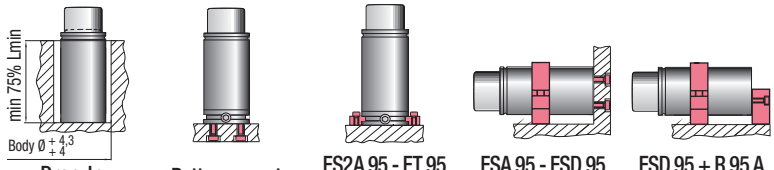

Drop-In | Bottom mount | FS2A 95 - FT 95 FS2 95 - FTP 95 | FSA 95 - FSD 95 FSE 95 | FSD 95 + R 95 A FSE 95 + R 95 A

HOW TO ORDER p. 165

INSTALLATION GUIDELINE p. 203

ML 12000

SW

ACTIVE SAFETY

OSAS

USAS

OPAS

Il nuovo codice sarà fornito solo ad esaurimento del vecchio

The new code will be supplied only when the old will be out of stock

Der neue Kode wird geliefert nur wenn der alte nicht mehr im Lager ist

Le nouveau code sera fourni uniquement lorsque le vieux stock sera ecoulé

El nuevo código será suministrado sólo cuando el viejo está fuera de stock

O novo código irá ser fornecido apenas quando o antigo esgotar stock

easy MANIFOLD p. 241

* $F1_i$ = Isothermal end force at 100% Cu p. 18

** $F1_p$ = Polytrophic end force at 100% Cu

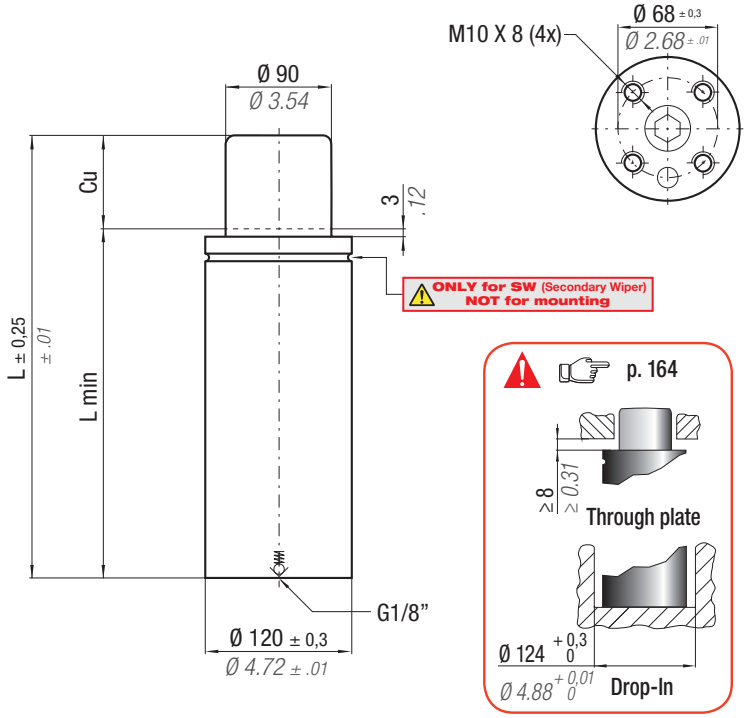

N2	°F 32 - 176 / °C 0 - 80	ΔP	P max	P min	S	SPM	Max Speed	Maintenance kit
		± 0,33 %/°C	200 bar *2900 psi*	20 bar *290 psi*	63,62 cm² *9.861 in²*	~ 20 - 50 (at 20°C)	1,6 m/s	39BMML12000C

CODE PHASING OUT from 05/2019	NEW	Cu mm	Cu inch	L mm	L inch	L min mm	L min inch	Fo Initial force daN	Fo lb	$F1_i$ * End force daN	$F1_i$ lb	$F1_p$ ** End force daN	$F1_p$ lb	Vo cm³	Vo in³	~Kg	~lb	PED 2014/68/EU
ML 12000 - 015 - C	ML 12000 - 015 - D	15	0.59	115	4.53	100	3.94	12720	28595	17877	40189	20134	45263	417,0	25.44	5,82	12.83	✓
ML 12000 - 025 - C	ML 12000 - 025 - D	25	0.98	135	5.31	110	4.33	± 5%		20211	45436	23346	52484	534,0	32.57	6,29	13.87	✓
ML 12000 - 038 - C	ML 12000 - 038 - D	38	1.50	165	6.50	127	5.00			21787	48979	25558	57457	718,0	43.80	7,01	15.45	✓
ML 12000 - 050 - C	ML 12000 - 050 - D	50	1.97	195	7.68	145	5.71	200 bar *2900 psi*		22429	50422	26470	59507	906,0	55.27	7,74	17.06	✓
ML 12000 - 063 - C	ML 12000 - 063 - D	63	2.48	225	8.86	162	6.38			23211	52180	27586	62016	1089,0	66.43	8,46	18.65	✓
ML 12000 - 080 - C	ML 12000 - 080 - D	80	3.15	265	10.43	185	7.28	+20 °C	+68 °F	23860	53639	28520	64116	1335,0	81.44	9,43	20.79	✓

KIT FOR LINKING

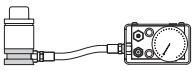

code: 39FML12000B

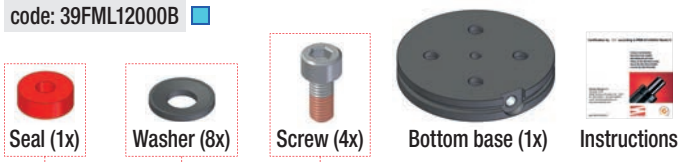

Sostituire ogni 1.000.000 di cicli.
Replace every 1 million cycles.
Nach 1 Mio. Hübe austauschen.
Remplacez à chaque million de cycles.
Reemplazar cada 1 millón de ciclos.
Substituir a cada 1 milhão de ciclos.

Bottom base dimension

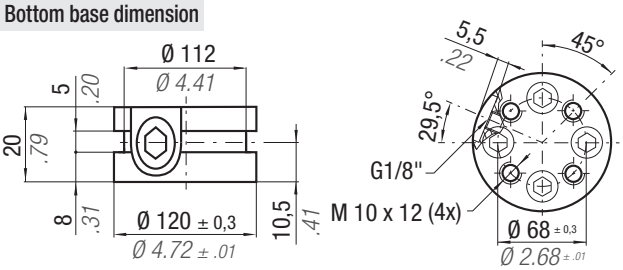

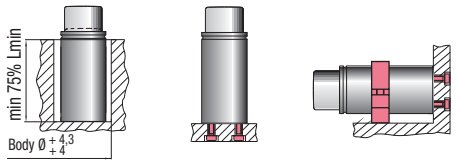

HOW TO ORDER p. 165

INSTALLATION GUIDELINE p. 203

ML 12000 N
linkable G1/8”

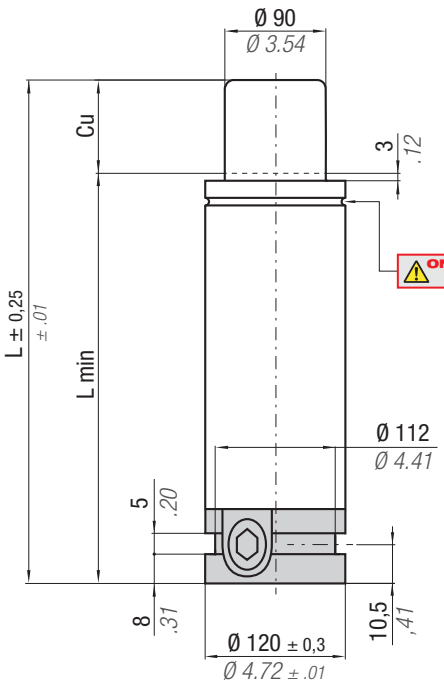

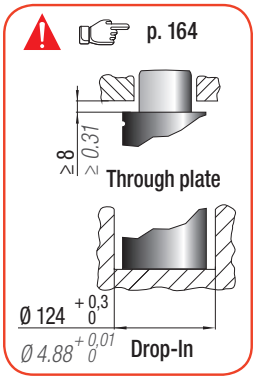

Il nuovo codice sarà fornito solo ad esaurimento del vecchio

The new code will be supplied only when the old will be out of stock

Der neue Kode wird geliefert nur wenn der alte nicht mehr im Lager ist

Le nouveau code sera fourni uniquement lorsque le vieux stock sera ecoulé

El nuevo código será suministrado sólo cuando el viejo está fuera de stock

O novo código irá ser fornecido apenas quando o antigo esgotar stock

* $F1_i$ = Isothermal end force at 100% Cu

p. 18

** $F1_p$ = Polytrophic end force at 100% Cu

SW

ACTIVE SAFETY

OSAS

USAS

OPAS

N2	°F 32 - 176	°C 0 - 80	ΔP	P max	P min	S	SPM	Max Speed	Maintenance kit
			± 0,33 %/°C	200 bar / 2900 psi	20 bar / 290 psi	63,62 cm² / 9.861 in²	~ 20 - 50 (at 20°C)	1,6 m/s	39BMML12000C

CODE PHASING OUT from 05/2019	NEW	Cu mm	Cu inch	L mm	L inch	L min mm	L min inch	F0 Initial force daN	F0 lb	$F1_i$ End force * daN	$F1_i$ lb	$F1_p$ End force ** daN	$F1_p$ lb	V0 cm³	V0 in³	~Kg	~lb	PED 2014/68/EU
ML12000-015-C-N	ML12000-015-D-N	15	0.59	135	5.31	120	4.72	12720	28595	17877	40189	20134	45263	417,0	25.44	7,45	16.42	✓
ML12000-025-C-N	ML12000-025-D-N	25	0.98	155	6.10	130	5.12	± 5%		20211	45436	23346	52484	534,0	32.57	7,92	17.46	✓
ML12000-038-C-N	ML12000-038-D-N	38	1.50	185	7.28	147	5.79			21787	48979	25558	57457	718,0	43.80	8,64	19.05	✓
ML12000-050-C-N	ML12000-050-D-N	50	1.97	215	8.46	165	6.50	200 bar 2900 psi		22429	50422	26470	59507	906,0	55.27	9,37	20.66	✓
ML12000-063-C-N	ML12000-063-D-N	63	2.48	245	9.65	182	7.17			23211	52180	27586	62016	1089,0	66.43	10,09	22.24	✓
ML12000-080-C-N	ML12000-080-D-N	80	3.15	285	11.22	205	8.07	+20 °C	+68 °F	23860	53639	28520	64116	1335,0	81.44	11,06	24.38	✓

ML

SERVICE BOX

code: 39SKML12000A

Sostituire ogni 1.000.000 di cicli.
Replace every 1 million cycles.
Nach 1 Mio. Hübe austauschen.
Remplacez à chaque million de cycles.
Reemplazar cada 1 millón de ciclos.
Substituir a cada 1 milhão de ciclos.

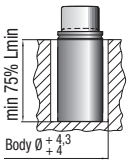

Drop-In

Bottom mount

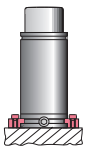

FS2A 120 - FT 120
FS2 120 - FTP 120

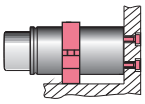

FSA 120 - FSD 120

HOW TO ORDER

p. 165

INSTALLATION GUIDELINE

p. 203

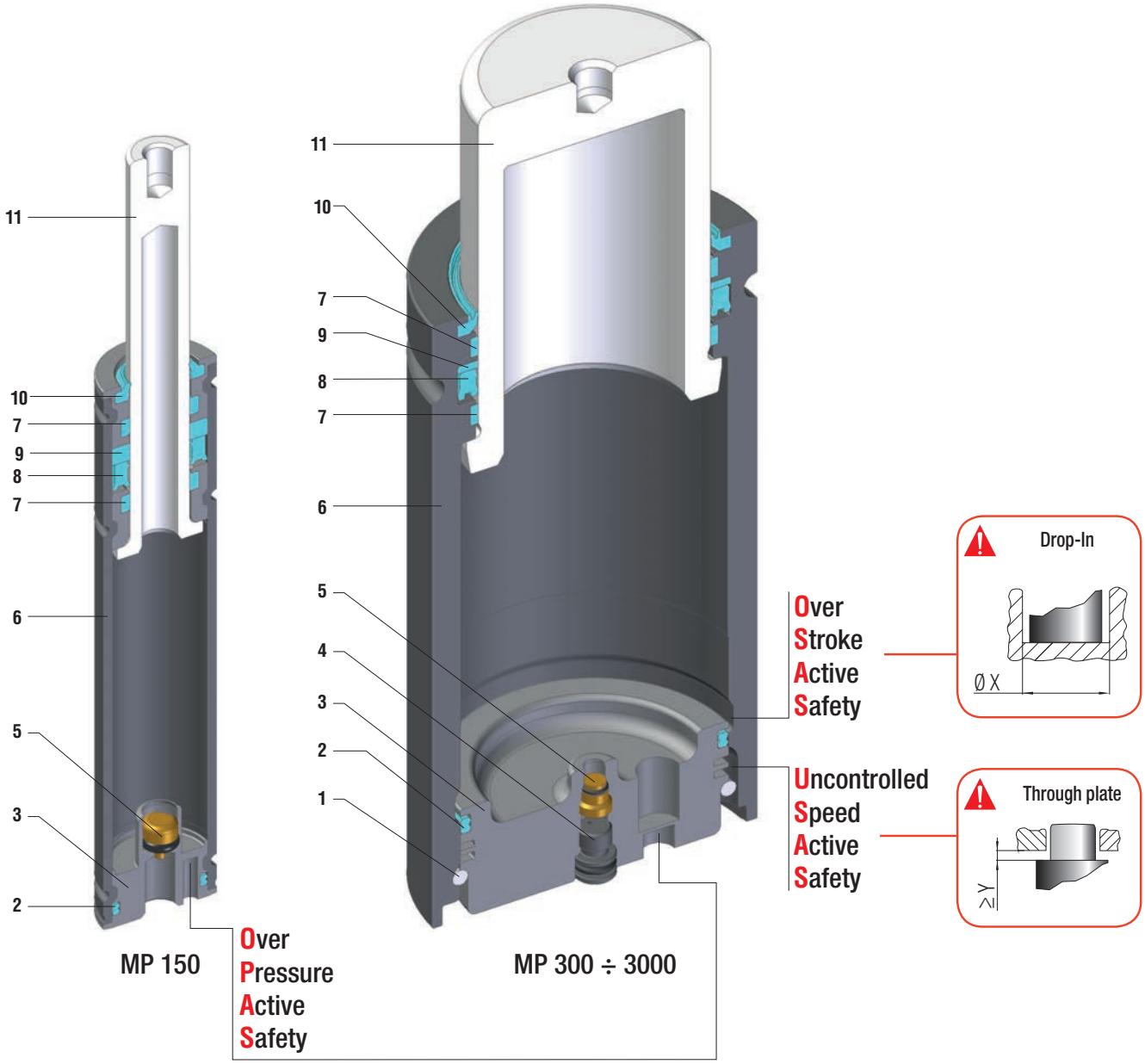

Massima forza, tenuta stelo - Maximum force, rod seal - Maximale Kraft, Kolbenstange dichtung
Forces maximale, joint de tige - Máxima fuerza, estanqueidad vástago - Força máxima, estanquidade na haste

SEALING	ROD SEAL
DESIGN	BOTTOM BASE - BODY DESIGN

1	Retaining ring	**5**	Valve	**9**	Back-up ring
2	Dual ring seal	**6**	Body	**10**	Rod wiper
3	Bottom base	**7**	Guide ring	**11**	Rod (nitrited superfinished)
4	Plug	**8**	Rod seal		

RANGE CHART

Model	Body Ø		Stroke Cu		Initial force F0		OSAS	USAS	OPAS	SKUDO	SW
	mm	*inch*	mm	*inch*	daN	*lb*					
MP 150	19	*0.75*	15 - 80	*0.59 - 3.15*	150	*337*	-	-	✓	-	-
MP 300	25	*0.98*	15 - 80	*0.59 - 3.15*	300	*674*	✓	✓	-	-	-
MP 500	32	*1.26*	10 - 80	*0.59 - 3.15*	500	*1124*	✓	✓	-	-	✓
MP 1000	38	*1.50*	10 - 80	*0.39 - 3.15*	1000	*2248*	✓	✓	✓	-	✓
MP 2000	50	*1.97*	10 - 80	*0.39 - 3.15*	2000	*4496*	✓	✓	✓	-	-
MP 3000	63	*2.48*	10 - 80	*0.39 - 3.15*	3000	*6744*	✓	✓	✓	-	-

✓ Built-in as standard ✓ Optional upon request

HOW TO ORDER

Series
Revision code
Model
MP1000-050-A-W
Stroke
Version

Available versions

MP 1000-050-A

Standard code

Self contained

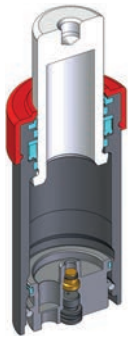

MP1000-050-A-W

Add "-W" to standard code

Self contained

+

Secondary wiper

MP

MP 150

SPECIAL SPRINGS

ACTIVE SAFETY

OPAS

*** $F1_i$ =** Isothermal end force at 100% Cu p. 18

**** $F1_p$ =** Polytrophic end force at 100% Cu

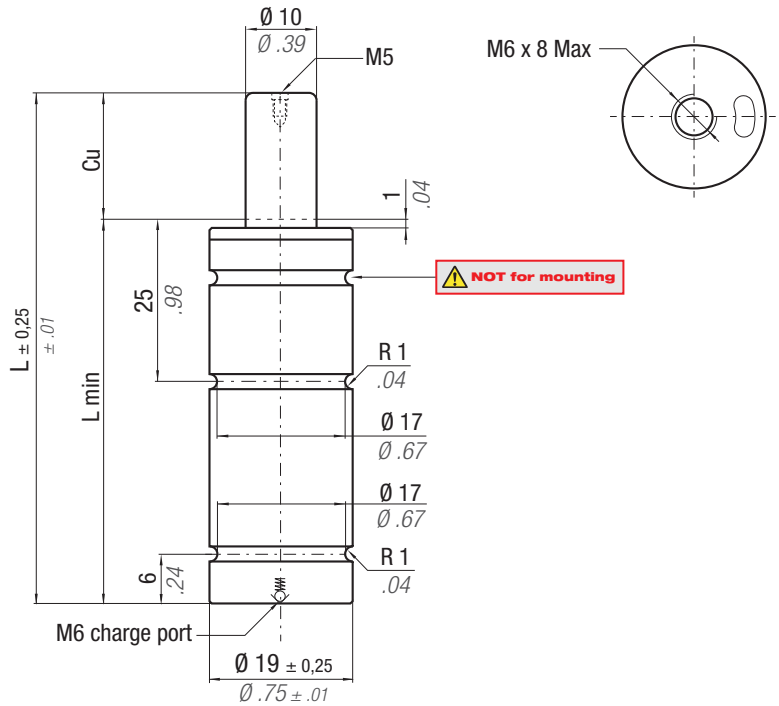

N2	°F 32 - 176 / °C 0 - 80	ΔP	P max	P min	S	SPM	Max Speed	Maintenance kit
		± 0,33 %/°C	191 bar *2770 psi*	20 bar *290 psi*	0,79 cm² *0.122 in²*	~ 40 - 80 (at 20°C)	1,8 m/s	Disposable

CODE	Cu mm	Cu inch	L mm	L inch	L min mm	L min inch	Fo Initial force daN	Fo lb	$F1_i$ * End force daN	$F1_i$ lb	$F1_p$ ** End force daN	$F1_p$ lb	Vo cm³	Vo in³	~Kg	~lb	PED 2014/68/EU
MP 150 - 010 - A	10	0.39	75	2.95	65	2.56	150 ± 5%	337	185	416	201	452	5,2	0.32	0,09	0.20	✓
MP 150 - 015 - A	15	0.59	85	3.35	70	2.76			195	438	214	481	6,4	0.39	0,09	0.20	✓
MP 150 - 020 - A	20	0.79	95	3.74	75	2.95			203	456	225	506	7,5	0.46	0,10	0.22	✓
MP 150 - 025 - A	25	0.98	105	4.13	80	3.15			209	470	234	526	8,6	0.52	0,11	0.24	✓
MP 150 - 032 - A	32	1.26	120	4.72	88	3.46			214	481	241	542	10,4	0.63	0,11	0.24	✓
MP 150 - 038 - A	38	1.50	135	5.31	97	3.82	191 bar	*2770 psi*	214	481	241	542	12,4	0.76	0,12	0.26	✓
MP 150 - 045 - A	45	1.77	150	5.91	105	4.13			217	488	245	551	14,1	0.86	0,13	0.29	✓
MP 150 - 050 - A	50	1.97	160	6.30	110	4.33			220	495	249	560	15,3	0.93	0,14	0.31	✓
MP 150 - 056 - A	56	2.20	175	6.89	119	4.69	+ 20 °C	*+68 °F*	219	492	248	558	17,2	1.05	0,14	0.31	✓
MP 150 - 063 - A	63	2.48	190	7.48	127	5,00			221	497	251	564	19,0	1.16	0,15	0.33	✓
MP 150 - 080 - A	80	3.15	220	8.66	140	5.51			231	519	264	593	22,0	1.34	0,17	0.37	✓

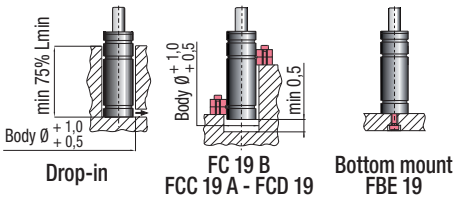

HOW TO ORDER p. 181

INSTALLATION GUIDELINE p. 203

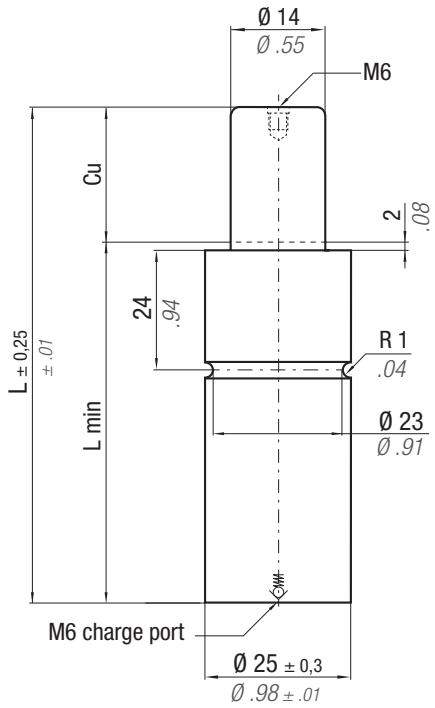

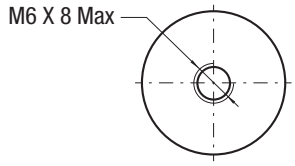

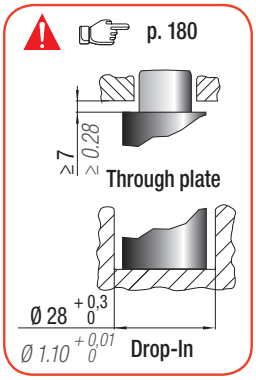

*** $F1_i$ =**

Isothermal end force at 100% Cu p. 18

**** $F1_p$ =**

Polytrophic end force at 100% Cu

ACTIVE SAFETY

OSAS

USAS

N_2	°F 32 - 176 / °C 0 - 80	ΔP	P max	P min	S	SPM	Max Speed	Maintenance kit
		± 0,33 %/°C	195 bar *2828 psi*	20 bar *290 psi*	1,54 cm² *0.239 in²*	~ 40 - 80 (at 20°C)	1,6 m/s	Disposable

CODE	Cu mm	Cu inch	L mm	L inch	L min mm	L min inch	Fo daN	Fo lb	$F1_i$ * daN	$F1_i$ * lb	$F1_p$ ** daN	$F1_p$ ** lb	Vo cm³	Vo in³	~Kg	~lb	PED 2014/68/EU
MP 300 - 010 - A	10	0.39	75	2.95	65	2.56	150 ± 5%	337	430	967	481	1081	6,4	0,39	0,17	0.37	✓
MP 300 - 015 - A	15	0.59	85	3.35	70	2.76			462	1039	526	1182	8,2	0.50	0,18	0.40	✓
MP 300 - 020 - A	20	0.79	95	3.74	75	2.95			489	1099	563	1266	9,8	0.60	0,20	0.44	✓
MP 300 - 025 - A	25	0.98	105	4.13	80	3.15			510	1147	592	1331	11,5	0.70	0,21	0.46	✓
MP 300 - 032 - A	32	1.26	120	4.72	88	3.46			524	1178	613	1378	14,1	0.86	0,23	0.51	✓
MP 300 - 038 - A	38	1.50	135	5.31	97	3.82	191 bar *2770 psi*		520	1169	606	1362	17,0	1.04	0,25	0.55	✓
MP 300 - 045 - A	45	1.77	150	5.91	105	4.13			529	1189	620	1394	19,6	1.20	0,27	0.60	✓
MP 300 - 050 - A	50	1.97	160	6.30	110	4.33			538	1209	633	1423	21,3	1.30	0,28	0.62	✓
MP 300 - 056 - A	56	2.20	175	6.89	119	4.69	+ 20 °C	+68 °F	533	1198	626	1407	24,1	1.47	0,30	0.66	✓
MP 300 - 063 - A	63	2.48	190	7.48	127	5,00			539	1212	634	1425	26,7	1.63	0,32	0.71	✓
MP 300 - 080 - A	80	3.15	225	8.86	145	5.71			555	1248	656	1475	32,7	1.99	0,36	0.79	✓

MP

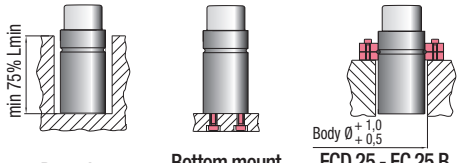

Drop-In

Bottom mount FBE 25

FCD 25 - FC 25 B FCC 25 A

HOW TO ORDER

p. 181

INSTALLATION GUIDELINE

p. 203

MP 500

SPECIAL SPRINGS

SW

ACTIVE SAFETY

OSAS

USAS

*** $F1_i$ =**
Isothermal end force at 100% Cu p. 18

**** $F1_p$ =**
Polytrophic end force at 100% Cu

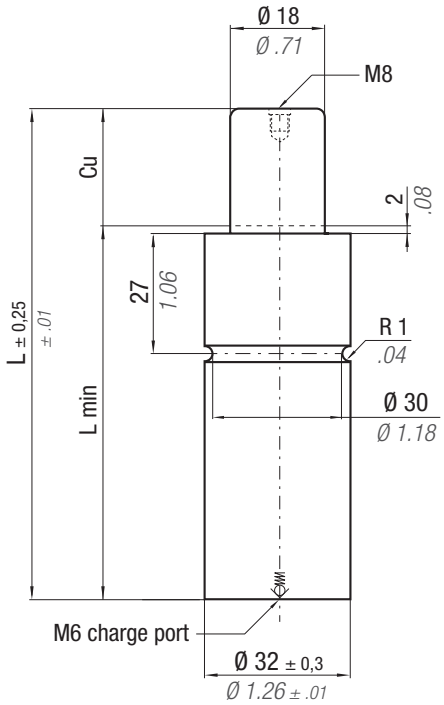

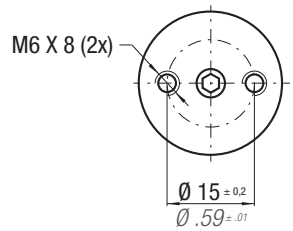

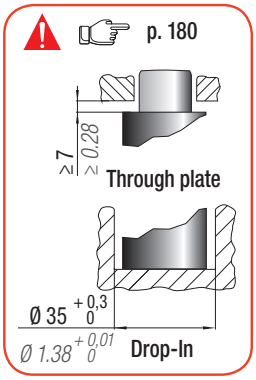

N_2	°F 32 - 176	°C 0 - 80	ΔP	P max	P min	S	SPM	Max Speed	Maintenance kit
			± 0,33 %/°C	197 bar *2857 psi*	20 bar *290 psi*	2,54 cm² *0.394 in²*	~ 40 - 80 (at 20°C)	1,6 m/s	Disposable

CODE	Cu mm	Cu inch	L mm	L inch	L min mm	L min inch	F0 Initial force daN	F0 lb	$F1_i$ * End force daN	$F1_i$ lb	$F1_p$ ** End force daN	$F1_p$ lb	V0 cm³	V0 in³	~Kg	~lb	PED 2014/68/EU
MP 500 - 010 - A	10	0.39	75	2.95	65	2.56	500 ± 5%	1124	659	1481	723	1625	13,4	0.82	0,29	0.64	✓
MP 500 - 015 - A	15	0.59	85	3.35	70	2.76			709	1594	790	1776	16,4	1.00	0,31	0.68	✓
MP 500 - 020 - A	20	0.79	95	3.74	75	2.95			747	1679	842	1893	19,3	1.18	0,33	0.73	✓
MP 500 - 025 - A	25	0.98	105	4.13	80	3.15			778	1749	884	1987	22,2	1.35	0,34	0.75	✓
MP 500 - 032 - A	32	1.26	120	4.72	88	3.46			803	1805	919	2066	26,8	1.63	0,37	0.82	✓
MP 500 - 038 - A	38	1.50	135	5.31	97	3.82	197 bar *2857 psi*		804	1807	920	2068	31,8	1.94	0,40	0.88	✓
MP 500 - 045 - A	45	1.77	150	5.91	105	4.13			820	1843	943	2120	36,4	2.22	0,43	0.95	✓
MP 500 - 050 - A	50	1.97	160	6.30	110	4.33			834	1875	963	2165	39,3	2.40	0,45	0.99	✓
MP 500 - 056 - A	56	2.20	175	6.89	119	4.69	+ 20 °C *+68 °F*		831	1868	958	2154	44,3	2.70	0,48	1.06	✓
MP 500 - 063 - A	63	2.48	195	7.68	132	5.20			816	1834	937	2106	51,4	3.14	0,52	1.15	✓
MP 500 - 080 - A	80	3.15	230	9.06	150	5.91			844	1897	976	2194	61,8	3.77	0,59	1.30	✓

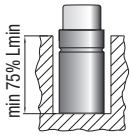

Drop-In

Bottom mount FBE 32

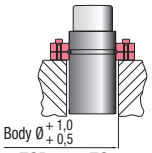

FCD 32 - FC 32 FCQC 32

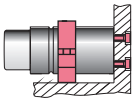

FSA 32 - FSD 32

HOW TO ORDER p. 181

INSTALLATION GUIDELINE p. 203

MP 1000

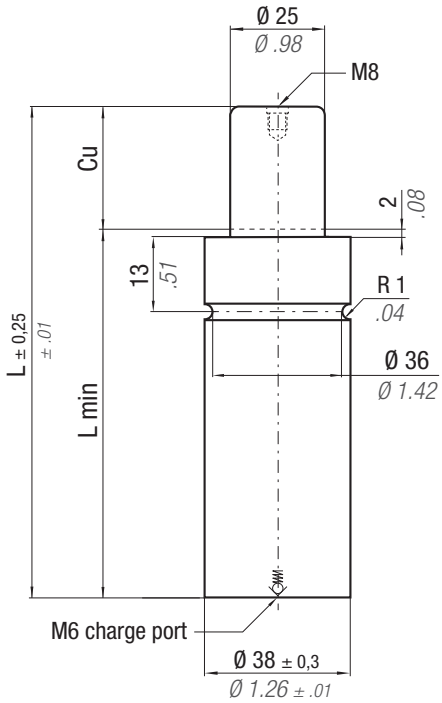

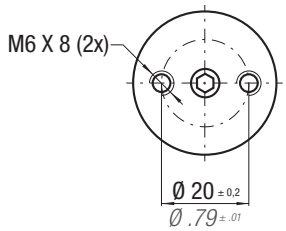

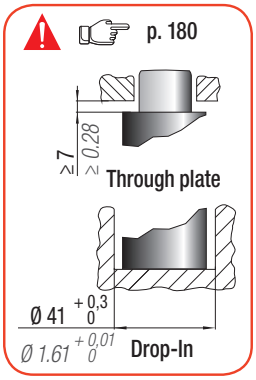

*** $F1_i$ =**
Isothermal end force at 100% Cu p. 18

**** $F1_p$ =**
Polytrophic end force at 100% Cu

SW

ACTIVE SAFETY

OSAS

USAS

OPAS

N_2	°F 32 - 176	°C 0 ~ 80	ΔP	P max	P min	S	SPM	Max Speed	Maintenance kit
			± 0,33 %/°C	205 bar *2973 psi*	20 bar *290 psi*	4,91 cm² *0.761 in²*	~ 40 - 80 (at 20°C)	1,6 m/s	39BMMP01000A

CODE	Cu mm	Cu inch	L mm	L inch	L min mm	L min inch	F0 Initial force daN	F0 lb	$F1_i$ End force * daN	$F1_i$ lb	$F1_p$ End force ** daN	$F1_p$ lb	V0 cm³	V0 in³	~Kg	~lb	PED 2014/68/EU
MP 1000 - 010 - A	10	0.39	75	2.95	65	2.56	1000 ± 5%	2248	1417	3186	1588	3570	21,5	1.31	0,37	0.82	✓
MP 1000 - 015 - A	15	0.59	85	3.35	70	2.76			1545	3473	1762	3961	26,6	1.62	0,39	0.86	✓
MP 1000 - 020 - A	20	0.79	95	3.74	75	2.95			1645	3698	1898	4267	31,6	1.93	0,41	0.90	✓
MP 1000 - 025 - A	25	0.98	105	4.13	80	3.15			1724	3876	2009	4516	36,7	2.24	0,44	0.97	✓
MP 1000 - 032 - A	32	1.26	120	4.72	88	3.46			1789	4022	2100	4721	44,5	2.71	0,48	1.06	✓
MP 1000 - 038 - A	38	1.50	135	5.31	97	3.82	205 bar *2973 psi*		1790	4024	2101	4723	52,8	3.22	0,51	1.12	✓
MP 1000 - 045 - A	45	1.77	150	5.91	105	4.13			1832	4118	2159	4854	60,6	3.70	0,55	1.21	✓
MP 1000 - 050 - A	50	1.97	160	6.3	110	4.33			1868	4199	2210	4968	65,7	4.01	0,58	1.28	✓
MP 1000 - 056 - A	56	2.20	175	6.89	119	4.69	+ 20 °C *+68 °F*		1859	4179	2198	4941	74,0	4.51	0,62	1.37	✓
MP 1000 - 063 - A	63	2.48	205	8.07	142	5.59			1716	3858	1997	4489	93,1	5.68	0,70	1.54	✓
MP 1000 - 080 - A	80	3.15	240	9.45	160	6.30			1792	4029	2103	4728	111,1	6.78	0,79	1.74	✓

MP

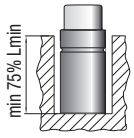

Drop-In

Bottom mount FBE 38

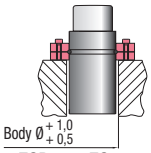

FCD 38 - FC 38 FCQC 38

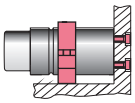

FSA 38 - FSD 38

HOW TO ORDER
p. 181

INSTALLATION GUIDELINE
p. 203

MP 2000

SPECIAL SPRINGS

ACTIVE SAFETY

OSAS

USAS

OPAS

* $F1_i$ = Isothermal end force at 100% Cu p. 18

** $F1_p$ = Polytrophic end force at 100% Cu

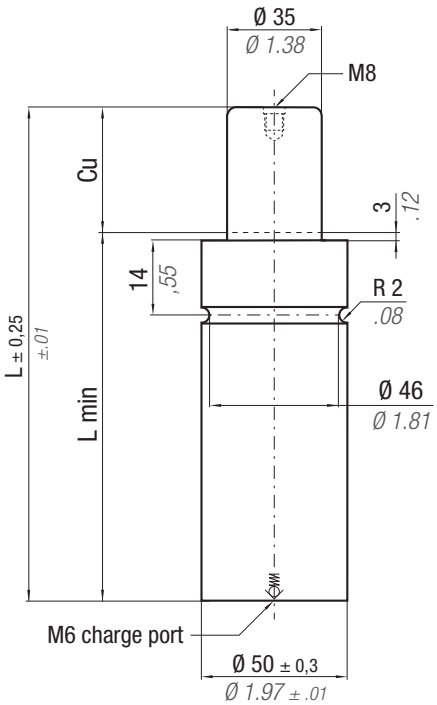

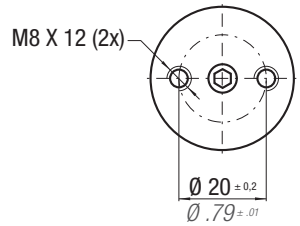

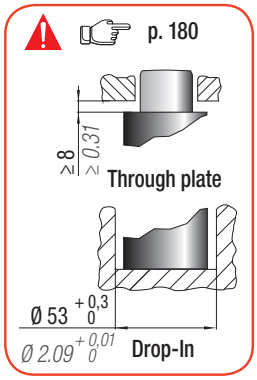

N_2	°F 32 - 176	°C 0 - 80	ΔP	P max	P min	S	SPM	Max Speed	Maintenance kit
			± 0,33 %/°C	209 bar *3031 psi*	20 bar *290 psi*	9,62 cm² *1.491 in²*	~ 40 - 80 (at 20°C)	1,6 m/s	39BMMP02000A

CODE	Cu mm	Cu *inch*	L mm	L *inch*	L min mm	L min *inch*	Fo Initial force daN	Fo *lb*	$F1_i$ * End force daN	$F1_i$ *lb*	$F1_p$ ** End force daN	$F1_p$ *lb*	Vo cm³	Vo *in³*	~Kg	~*lb*	PED 2014/68/EU
MP 2000 - 010 - A	10	*0.39*	90	*3.54*	80	*3.15*	2000 ± 5%	*4496*	2641	*5937*	2911	*6544*	52,0	*3.17*	0,76	*1,68*	✓
MP 2000 - 015 - A	15	*0.59*	115	*4.53*	100	*3.94*			2621	*5892*	2885	*6486*	80,0	*4.88*	0,89	*1,96*	✓
MP 2000 - 020 - A	20	*0.79*	125	*4.92*	105	*4.13*			2780	*6250*	3094	*6956*	89,1	*5.44*	0,93	*2,05*	✓
MP 2000 - 025 - A	25	*0.98*	135	*5.31*	110	*4.33*			2922	*6569*	3283	*7380*	98,3	*6,00*	0,98	*2,16*	✓
MP 2000 - 032 - A	32	*1.26*	150	*5.91*	118	*4.65*			3080	*6924*	3495	*7857*	112,3	*6.85*	1,04	*2,29*	✓
MP 2000 - 038 - A	38	*1.50*	165	*6.50*	127	*5,00*	209 bar *3031 psi*		3159	*7102*	3601	*8095*	127,1	*7.75*	1,11	*2,45*	✓
MP 2000 - 045 - A	45	*1.77*	180	*7.09*	135	*5.31*			3275	*7362*	3759	*8451*	141,1	*8.61*	1,18	*2,60*	✓
MP 2000 - 050 - A	50	*1.97*	190	*7.48*	140	*5.51*			3361	*7556*	3876	*8714*	150,3	*9.17*	1,22	*2,69*	✓
MP 2000 - 056 - A	56	*2.20*	205	*8.07*	149	*5.87*	+ 20 °C *+68 °F*		3403	*7650*	3934	*8844*	165,0	*10.07*	1,29	*2,84*	✓
MP 2000 - 063 - A	63	*2.48*	220	*8.66*	157	*6.18*			3485	*7835*	4047	*9098*	179,1	*10.93*	1,36	*3,00*	✓
MP 2000 - 080 - A	80	*3.15*	255	*10.04*	175	*6.89*			3673	*8257*	4308	*9685*	211,4	*12.9*	1,51	*3,33*	✓

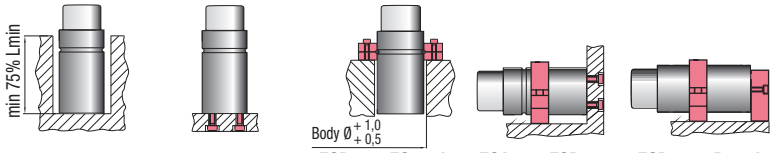

Drop-In | Bottom mount FBE 50 | FCD 50 - FC 50 A FCQC 50 A | FSA 50 - FSD 50 FSE 50 | FSD 50 + R 50 A FSE 50 + R 50 A

HOW TO ORDER p. 181

INSTALLATION GUIDELINE p. 203

MP 3000

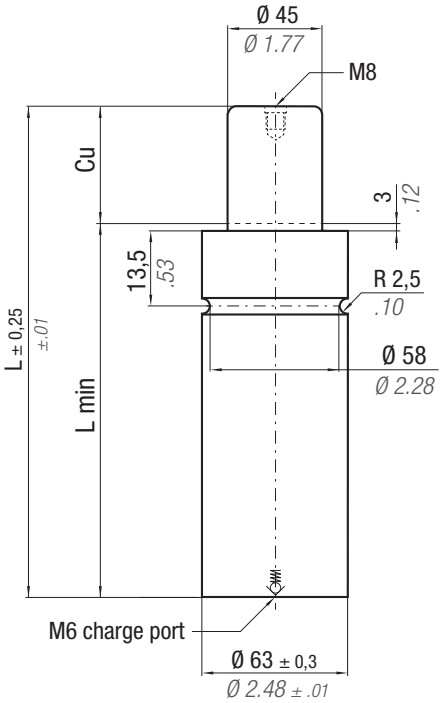

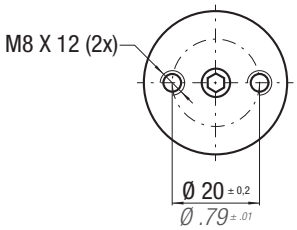

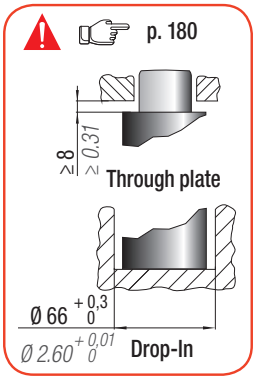

*** $F1_i$ =**
Isothermal end force at 100% Cu p. 18

**** $F1_p$ =**
Polytrophic end force at 100% Cu

ACTIVE SAFETY

OSAS

USAS

OPAS

N_2	°F 32 - 176	°C 0 ~ 80	ΔP	P max	P min	S	SPM	Max Speed	Maintenance kit
			± 0,33 %/°C	189 bar *1741 psi*	20 bar *290 psi*	15,90 cm² *2.465 in²*	~ 40 - 80 (at 20°C)	1,6 m/s	39BMMP03000A

CODE	Cu mm	Cu *inch*	L mm	L *inch*	L min mm	L min *inch*	F0 Initial force daN	F0 *lb*	$F1_i$ * End force daN	$F1_i$ *lb*	$F1_p$ ** End force daN	$F1_p$ *lb*	V0 cm³	V0 *in³*	~Kg	*~lb*	PED 2014/68/EU
MP 3000 - 010 - A	10	*0.39*	95	*3.74*	85	*3.35*	3000 ± 5%	*6744*	3862	*8682*	4243	*9539*	89,7	*5.47*	1,25	*2.76*	✓
MP 3000 - 015 - A	15	*0.59*	115	*4.53*	100	*3.94*			3932	*8839*	4339	*9754*	126,4	*7.71*	1,40	*3.09*	✓
MP 3000 - 020 - A	20	*0.79*	125	*4.92*	105	*4.13*			4165	*9363*	4657	*10469*	141,8	*8.65*	1,46	*3.22*	✓
MP 3000 - 025 - A	25	*0.98*	135	*5.31*	110	*4.33*			4370	*9824*	4941	*11108*	157,2	*9.59*	1,52	*3.35*	✓
MP 3000 - 032 - A	32	*1.26*	150	*5.91*	118	*4.65*	189 bar *2741 psi*		4593	*10325*	5253	*11809*	180,9	*11.03*	1,62	*3.57*	✓
MP 3000 - 038 - A	38	*1.50*	165	*6.50*	127	*5,00*			4696	*10557*	5399	*12137*	205,8	*12.55*	1,72	*3.79*	✓
MP 3000 - 045 - A	45	*1.77*	180	*7.09*	135	*5.31*			4856	*10917*	5626	*12648*	229,6	*14.01*	1,82	*4.01*	✓
MP 3000 - 050 - A	50	*1.97*	190	*7.48*	140	*5.51*	+ 20 °C *+68 °F*		4975	*11184*	5795	*13028*	245,0	*14.95*	1,89	*4.17*	✓
MP 3000 - 063 - A	63	*2.48*	220	*8.66*	157	*6.18*			5137	*11548*	6029	*13554*	293,6	*17.91*	2,08	*4.59*	✓
MP 3000 - 080 - A	80	*3.15*	255	*10.04*	175	*6.89*			5389	*12115*	6395	*14377*	348,2	*21.24*	2,31	*5.09*	✓

MP

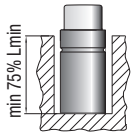

Drop-In

Bottom mount FBE 63

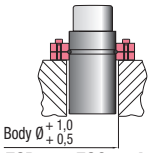

FCD 63 - FCQ 63 A FCQC 63

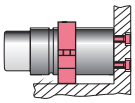

FSA 63 - FSD 63 FSC 63

HOW TO ORDER
p. 181

INSTALLATION GUIDELINE
p. 203

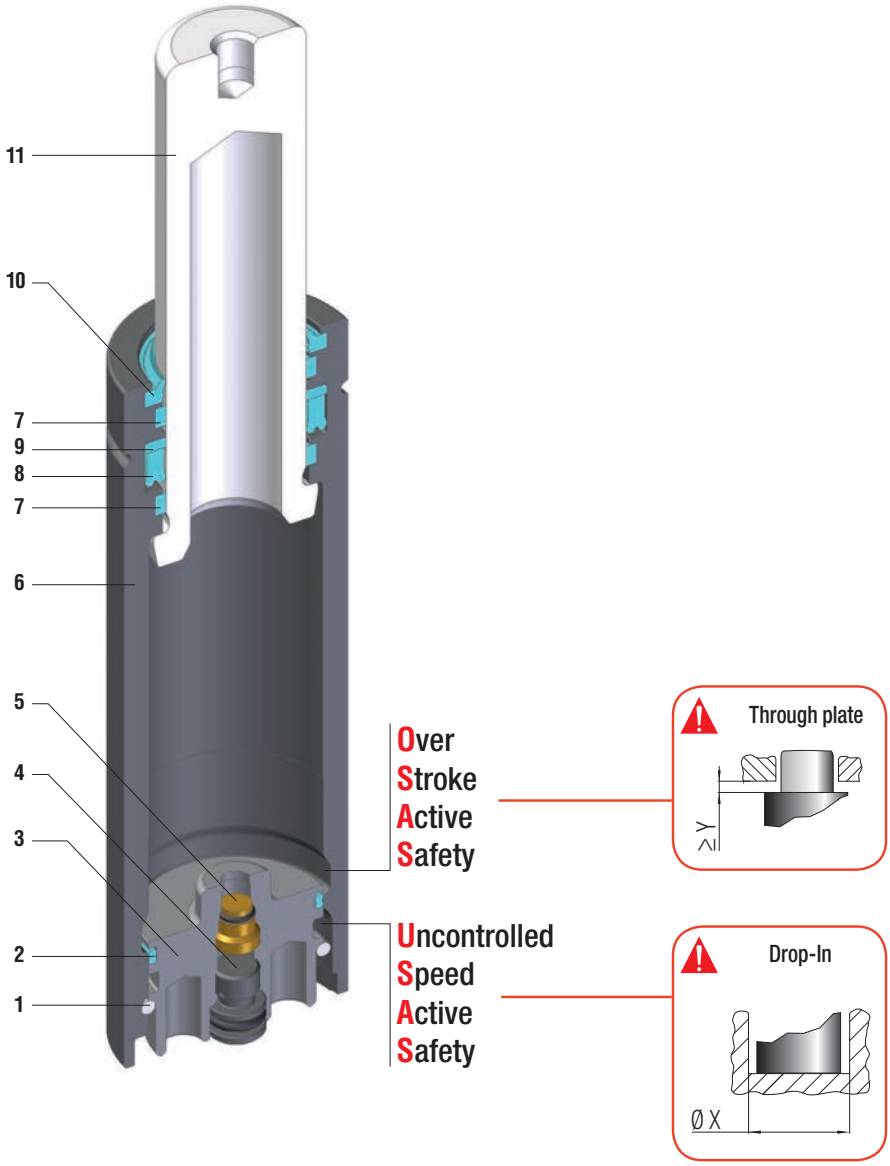

Ø 32 – Massima forza, tenuta stelo - Maximum force, rod seal - Maximale Kraft, Kolbenstange dichtung
Forces maximale, joint de tige - Máxima fuerza, estanqueidad vástago - Força máxima, estanquidade na haste

SEALING	ROD SEAL
DESIGN	BOTTOM BASE - BODY DESIGN

1	Retaining ring	**5**	Valve	**9**	Back-up ring
2	Dual ring seal	**6**	Body	**10**	Rod wiper
3	Bottom base	**7**	Guide ring	**11**	Rod (nitrited superfinished)
4	Plug	**8**	Rod seal		

RANGE CHART

Model	Body Ø		Stroke Cu		Initial force F0		OSAS	USAS	OPAS	SKUDO	SW
	mm	*inch*	mm	*inch*	daN	*lb*					
MQ 700	32	*1.26*	10 - 80	*0.39 - 3.15*	660	*1484*	✓	✓	-	-	-

✓ Built-in as standard ✓ Optional upon request

HOW TO ORDER

Series — Stroke

MQ 700-050-A

Model — Revision code

Available version

MQ 700-050-A

Standard code

Self contained

MQ 700

SPECIAL SPRINGS

ACTIVE SAFETY

OSAS

USAS

*** $F1_i$ =** Isothermal end force at 100% Cu p. 18

**** $F1_p$ =** Polytrophic end force at 100% Cu

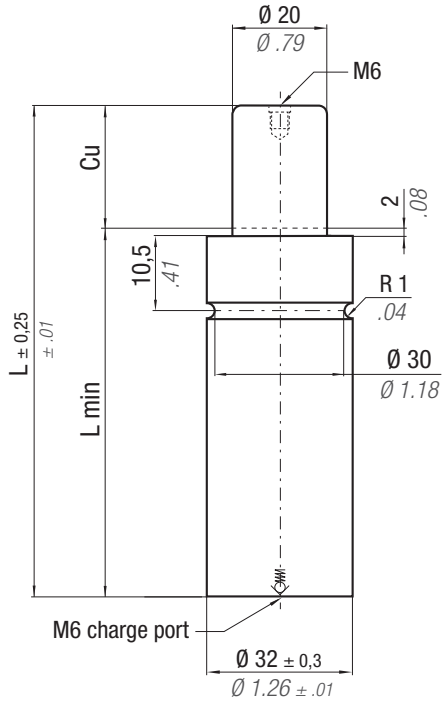

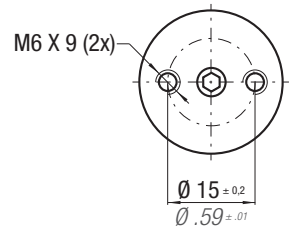

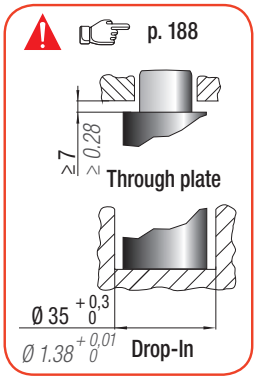

N_2	°F 32 - 176	°C 0 - 80	ΔP	P max	P min	S	SPM	Max Speed	Maintenance kit
			± 0,33 %/°C	210 bar *3045 psi*	20 bar *290 psi*	3,14 cm² *0.487 in²*	~ 40 - 80 (at 20°C)	1,6 m/s	Disposable

CODE	Cu mm	Cu inch	L mm	L inch	L min mm	L min inch	Fo Initial force daN	Fo lb	$F1_i$ * End force daN	$F1_i$ lb	$F1_p$ ** End force daN	$F1_p$ lb	Vo cm³	Vo in³	~Kg	~lb	PED 2014/68/EU
MQ 700 - 010 - A	10	0.39	75	2.95	65	2.56	660 ± 5%	1484	987	2219	1114	2504	12,0	0.73	0,29	0.64	✓
MQ 700 - 015 - A	15	0.59	85	3.35	70	2.76			1084	2437	1244	2797	15,0	0.92	0,31	0.68	✓
MQ 700 - 020 - A	20	0.79	95	3.74	75	2.95			1157	2601	1344	3021	18,0	1.10	0,33	0.73	✓
MQ 700 - 025 - A	25	0.98	105	4.13	80	3.15			1214	2729	1423	3199	21,0	1.28	0,35	0.77	✓
MQ 700 - 032 - A	32	1.26	120	4.72	88	3.46			1256	2824	1482	3332	26,0	1.59	0,38	0.84	✓
MQ 700 - 038 - A	38	1.50	135	5.31	97	3.82	210 bar *3045 psi*		1246	2801	1468	3300	32,0	1.95	0,41	0.90	✓
MQ 700 - 045 - A	45	1.77	150	5.91	105	4.13			1273	2862	1506	3386	36,0	2.20	0,44	0.97	✓
MQ 700 - 050 - A	50	1.97	160	6.30	110	4.33			1299	2920	1542	3467	39,0	2.38	0,46	1.01	✓
MQ 700 - 056 - A	56	2.20	175	6.89	119	4.69	+ 20 °C	+68 °F	1287	2893	1525	3428	45,0	2.75	0,49	1.08	✓
MQ 700 - 063 - A	63	2.48	195	7.68	132	5.20			1250	2810	1474	3314	52,0	3.17	0,53	1.17	✓
MQ 700 - 080 - A	80	3.15	230	9.06	150	5.91			1300	2923	1543	3469	63,0	3.84	0,60	1.32	✓

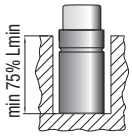

Drop-In

Bottom mount FBE 32

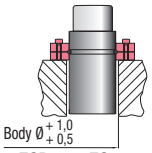

FCD 32 - FC 32 FCQC 32

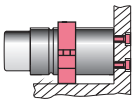

FSA 32 - FSD 32

HOW TO ORDER p. 189

INSTALLATION GUIDELINE p. 203

THIS PAGE IS INTENTIONALLY LEFT BLANK

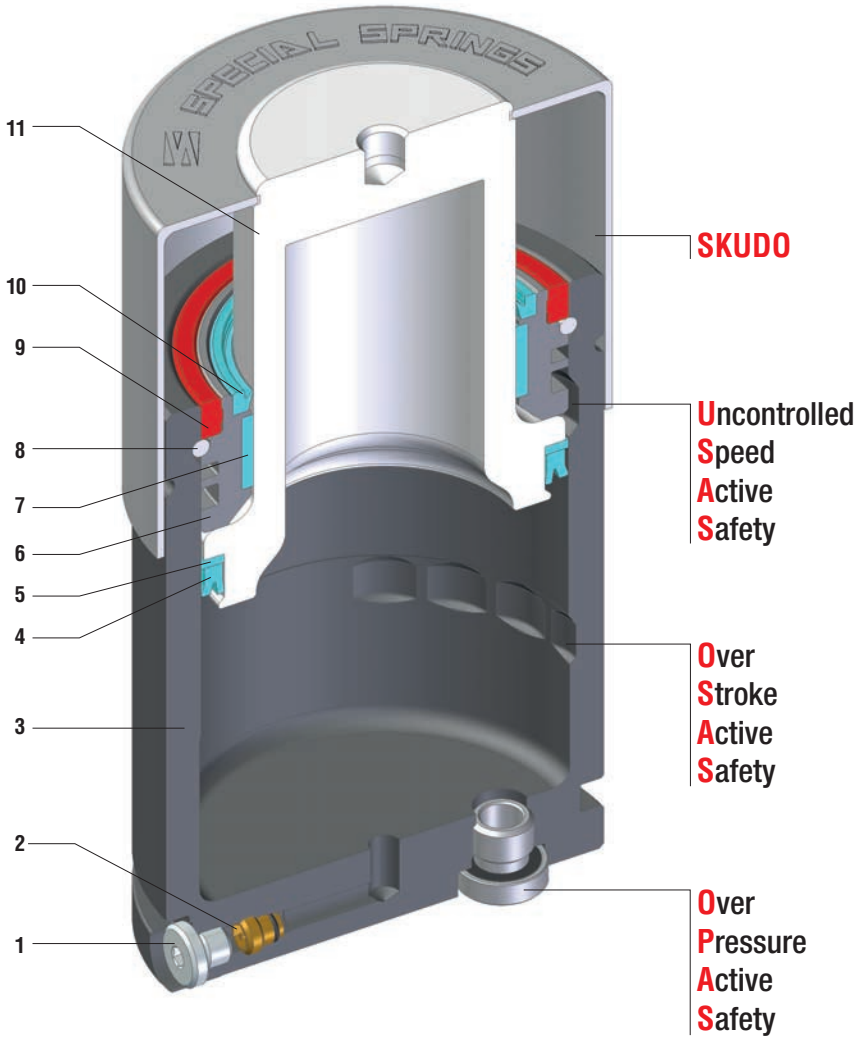

Massima forza, tenuta pistone + SKUDO - Maximum force, piston seal + SKUDO - Maximale Kraft, Kolbendichtung + SKUDO - Force maximale, piston étanche + SKUDO - Máxima fuerza, estanqueidad pistón + SKUDO - Força máxima, estanquidade no pistão + SKUDO

SEALING	PISTON SEAL
DESIGN	PISTON - BODY DESIGN

1	Plug	**5**	Back-up ring	**9**	Outer seal
2	Valve	**6**	Bush	**10**	Rod wiper
3	Body	**7**	Guide ring	**11**	Rod (nitrited superfinished)
4	Piston seal	**8**	Retaining ring		

RANGE CHART

Model	Body Ø		Stroke Cu		Initial force F0		OSAS	USAS	OPAS	SKUDO
	mm	*inch*	mm	*inch*	daN	*lb*				
KE 400	25	*0.98*	6 - 50	*0.39 - 1.97*	425	*955*	-	-	-	✓
KE 750	32	*1.26*	6 - 50	*0.39 - 1.97*	740	*1664*	✓	✓	✓	✓
KE 1000	38	*1.50*	6 - 50	*0.24 - 1.97*	1060	*2383*	✓	✓	✓	✓
KE 1800	50	*1.97*	6 - 65	*0.24 - 1.97*	1885	*4238*	✓	✓	✓	✓
KE 3000	63	*2.48*	10 - 65	*0.39 - 1.97*	2945	*6620*	✓	✓	✓	✓
KE 4700	75	*2.95*	10 - 65	*0.39 - 1.97*	4675	*10510*	✓	✓	✓	✓
KE 7500	95	*3.74*	10 - 65	*0.39 - 1.97*	7540	*16950*	✓	✓	✓	✓
KE 12000	120	*4.72*	10 - 65	*0.39 - 1.97*	11780	*26481*	✓	✓	✓	✓
KE 18500	150	*5.91*	10 - 65	*0.39 - 1.97*	18410	*41386*	✓	✓	✓	✓

HOW TO ORDER

Series — Revision code

Model — **KE 1800-050-B-ED**

Stroke — Version

Available versions

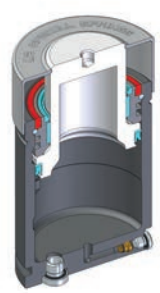

KE 1800-050-B

Standard code

Self contained

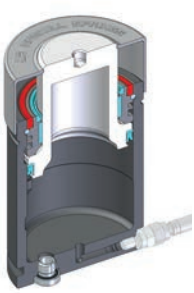

KE 1800-050-B-N

Add "-N" to standard code

Linkable

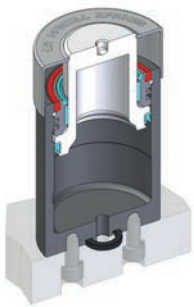

KE 1800-050-B-ED

Add "-ED" to standard code

Easy Manifold

SPECIAL SPRINGS

ACTIVE SAFETY

SKUDO

* $F1_i$ = Isothermal end force at 100% Cu p. 18

** $F1_p$ = Polytrophic end force at 100% Cu

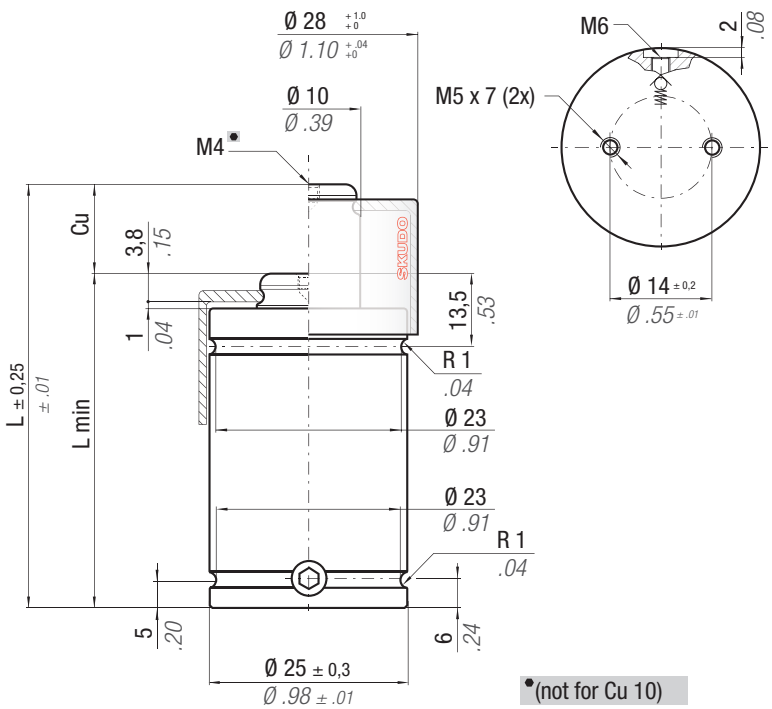

N_2	°F 32 - 176	°C 0 - 80	ΔP	P max	P min	S	SPM	Max Speed	Maintenance kit
			± 0,33 %/°C	150 bar *2175 psi*	20 bar *290 psi*	2,84 cm² *0.440 in²*	~ 50 - 100 (at 20°C)	0,8 m/s	Disposable

CODE	Cu mm	Cu inch	L mm	L inch	L min mm	L min inch	Fo Initial force daN	Fo lb	$F1_i$ * End force daN	$F1_i$ lb	$F1_p$ ** End force daN	$F1_p$ lb	Vo cm³	Vo in³	~Kg	~lb	PED 2014/68/EU
KE 400 - 006 - A	6	0.24	56	2.2	50	1.97	425 ± 5%	955	789	1774	1011	2273	4,0	0.24	0,13	0.29	✓
KE 400 - 010 - A	10	0.39	70	2.76	60	2.36			871	1958	1153	2592	6,0	0.37	0,16	0.35	✓
KE 400 - 016 - A	16	0.63	91	3.58	75	2.95			881	1981	1171	2633	10,0	0.61	0,18	0.40	✓
KE 400 - 025 - A	25	0.98	120	4.72	95	3.74	150 bar *2175psi*		876	1969	1162	2612	16,0	0.98	0,23	0.51	✓
KE 400 - 032 - A	32	1.26	140	5.51	108	4.25			907	2040	1217	2736	19,0	1.16	0,24	0,53	✓
KE 400 - 040 - A	40	1.57	165	6.50	125	4.92	+ 20 °C *+68 °F*		907	2039	1217	2736	24,0	1.46	0,28	0,62	✓
KE 400 - 050 - A	50	1.97	195	7.68	145	5.71			919	2065	1238	2783	30,0	1.83	0,31	0,68	✓

WARNING REMOVE SKUDO

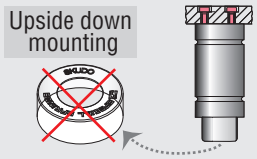

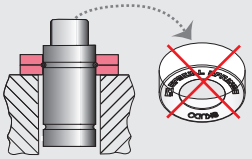

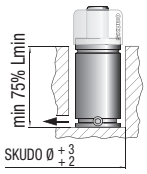

Drop-In

Bottom mount

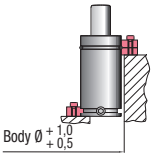

FC 25 B
FCC 25 A

HOW TO ORDER p. 193

INSTALLATION GUIDELINE p. 203

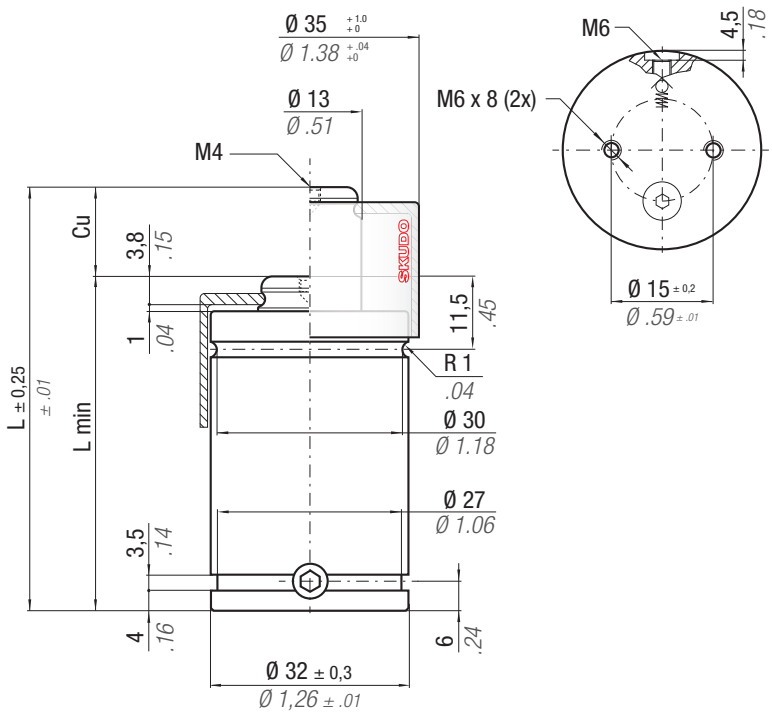

Il nuovo codice sarà fornito solo ad esaurimento del vecchio

The new code will be supplied only when the old will be out of stock

Der neue Kode wird geliefert nur wenn der alte nicht mehr im Lager ist

Le nouveau code sera fourni uniquement lorsque le vieux stock sera ecoulé

El nuevo código será suministrado sólo cuando el viejo está fuera de stock

O novo código irá ser fornecido apenas quando o antigo esgotar stock

easy MANIFOLD p. 241

* $F1_i$ = Isothermal end force at 100% Cu p. 18

** $F1_p$ = Polytrophic end force at 100% Cu

ACTIVE SAFETY

OSAS

USAS

OPAS

SKUDO

N2	°F 32 - 176 / °C 0 - 80	ΔP	P max	P min	S	SPM	Max Speed	Maintenance kit
		± 0,33 %/°C	150 bar 2175 psi	20 bar 290 psi	4,91 cm² 0.761 in²	~ 50 - 100 (at 20°C)	0,8 m/s	39BMKE00750B

CODE PHASING OUT from 08/2012	NEW	Cu mm	Cu inch	L mm	L inch	L min mm	L min inch	F0 Initial force daN	F0 lb	$F1_i$ * End force daN	$F1_i$ lb	$F1_p$ ** End force daN	$F1_p$ lb	V0 cm³	V0 in³	~Kg	~lb	PED 2014/68/EU
KE 750 - 006 - A	KE 750 - 006 - B	6	0.24	63	2.48	57	2.24	740 ± 5%	1664	1207	2714	1486	3341	9,0	0.55	0,23	0.51	✓
KE 750 - 010 - A	KE 750 - 010 - B	10	0.39	75	2.95	65	2.56			1310	2945	1656	3723	13,0	0.79	0,25	0.55	✓
KE 750 - 016 - A	KE 750 - 016 - B	16	0.63	93	3.66	77	3.03			1390	3125	1792	4029	19,0	1.16	0,29	0.64	✓
KE 750 - 025 - A	KE 750 - 025 - B	25	0.98	120	4.72	95	3.74	150 bar 2175psi		1450	3259	1895	4260	28,0	1.71	0,33	0.73	✓
KE 750 - 032 - A	KE 750 - 032 - B	32	1.26	140	5.51	108	4.25			1496	3363	1975	4440	35,0	2.14	0,37	0.82	✓
KE 750 - 040 - A	KE 750 - 040 - B	40	1.57	165	6.50	125	4.92			1496	3363	1975	4440	44,0	2.68	0,42	0.92	✓
KE 750 - 050 - A	KE 750 - 050 - B	50	1.97	195	7.68	145	5.71	+ 20 °C +68 °F		1513	3400	2004	4505	54,0	3.29	0,47	1.04	✓

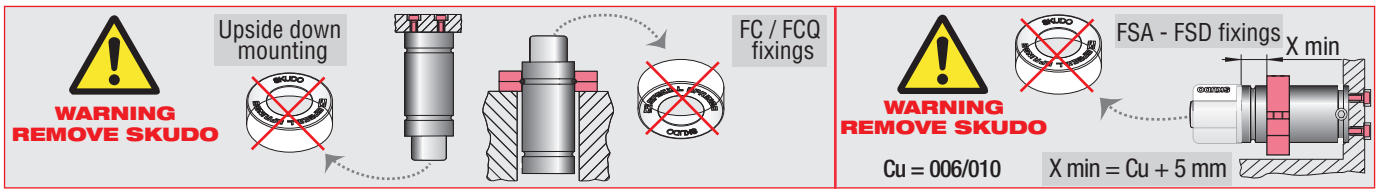

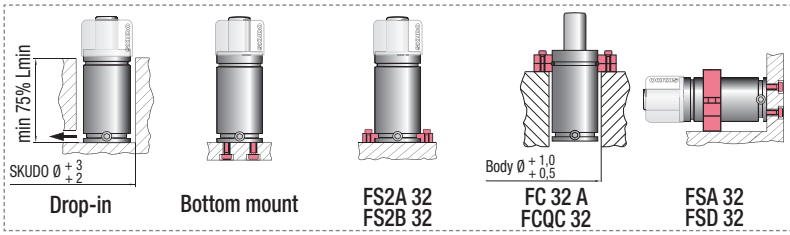

HOW TO ORDER p. 193

INSTALLATION GUIDELINE p. 203

SPECIAL SPRINGS

ACTIVE SAFETY

OSAS

USAS

OPAS

SKUDO

Il nuovo codice sarà fornito solo ad esaurimento del vecchio

The new code will be supplied only when the old will be out of stock

Der neue Kode wird geliefert nur wenn der alte nicht mehr im Lager ist

Le nouveau code sera fourni uniquement lorsque le vieux stock sera ecoulé

El nuevo código será suministrado sólo cuando el viejo está fuera de stock

O novo código irá ser fornecido apenas quando o antigo esgotar stock

easy MANIFOLD p. 241

* $F1_i$ = Isothermal end force at 100% Cu p. 18

** $F1_p$ = Polytrophic end force at 100% Cu

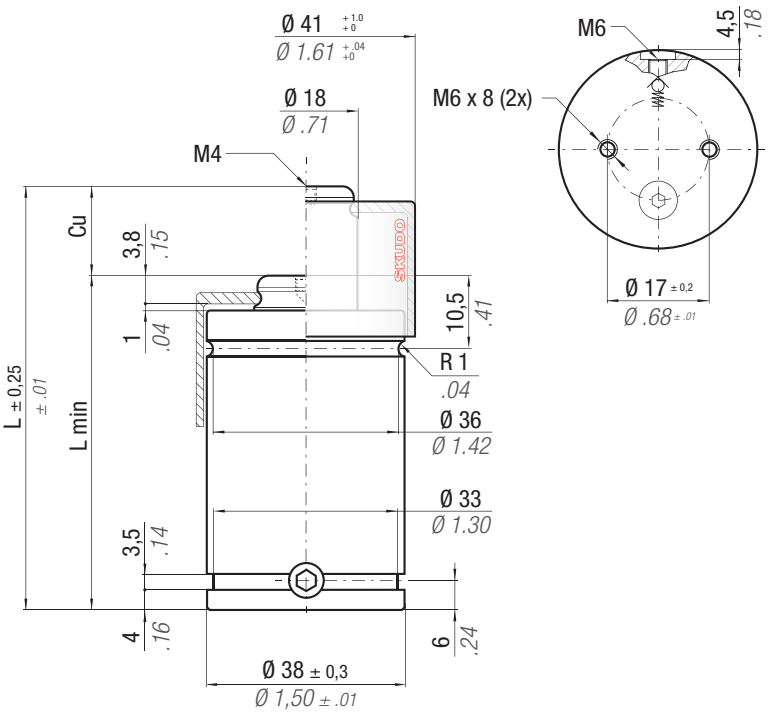

N2	°F 32 - 176 / °C 0 - 80	ΔP	P max	P min	S	SPM	Max Speed	Maintenance kit
		± 0,33 %/°C	150 bar *2175 psi*	20 bar *290 psi*	7,07 cm² *1.096 in²*	~ 50 - 100 (at 20°C)	0,8 m/s	39BMKE01000B

CODE PHASING OUT from 08/2012	NEW	Cu mm	Cu *inch*	L mm	L *inch*	L min mm	L min *inch*	Fo Initial force daN	Fo *lb*	$F1_i$ * End force daN	$F1_i$ *lb*	$F1_p$ ** End force daN	$F1_p$ *lb*	Vo cm³	Vo *in³*	~Kg	*~lb*	PED 2014/68/EU
KE 1000 - 006 - A	◆KE 1000 - 006 - B	6	*0.24*	61	*2.40*	55	*2.17*	1060 ± 5%	*2383*	1902	*4277*	2412	*5422*	11,0	*0.67*	0,33	*0.72*	✓
KE 1000 - 010 - A	KE 1000 - 010 - B	10	*0.39*	78	*3.07*	68	*2.68*			1834	*4123*	2297	*5164*	19,0	*1.16*	0,38	*0.84*	✓
KE 1000 - 016 - A	KE 1000 - 016 - B	16	*0.63*	100	*3.94*	84	*3.31*			1814	*4078*	2264	*5090*	31,0	*1.89*	0,44	*0.97*	✓
KE 1000 - 025 - A	KE 1000 - 025 - B	25	*0.98*	135	*5.31*	110	*4.33*	150 bar *2175psi*		1769	*3977*	2190	*4923*	51,0	*3.11*	0,53	*1.17*	✓
KE 1000 - 032 - A	KE 1000 - 032 - B	32	*1.26*	167	*6.57*	135	*5.31*			1701	*3824*	2079	*4674*	69,0	*4.21*	0,63	*1.39*	✓
KE 1000 - 040 - A	KE 1000 - 040 - B	40	*1.57*	195	*7.68*	155	*6.10*			1727	*3883*	2121	*4768*	84,0	*5.12*	0,70	*1.54*	✓
KE 1000 - 050 - A	KE 1000 - 050 - B	50	*1.97*	230	*9.06*	180	*7.09*	+ 20 °C	*+68 °F*	1750	*3934*	2159	*4854*	103,0	*6.28*	0,79	*1.74*	✓

◆ Disposable

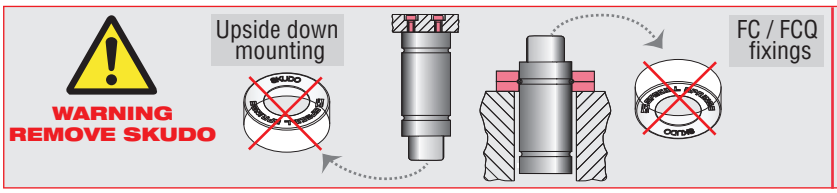

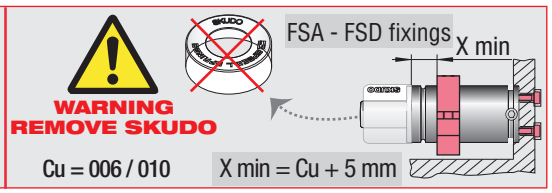

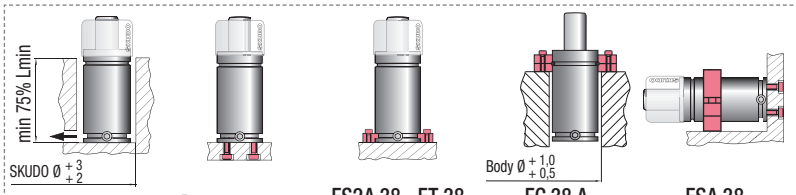

HOW TO ORDER p. 193

INSTALLATION GUIDELINE p. 203

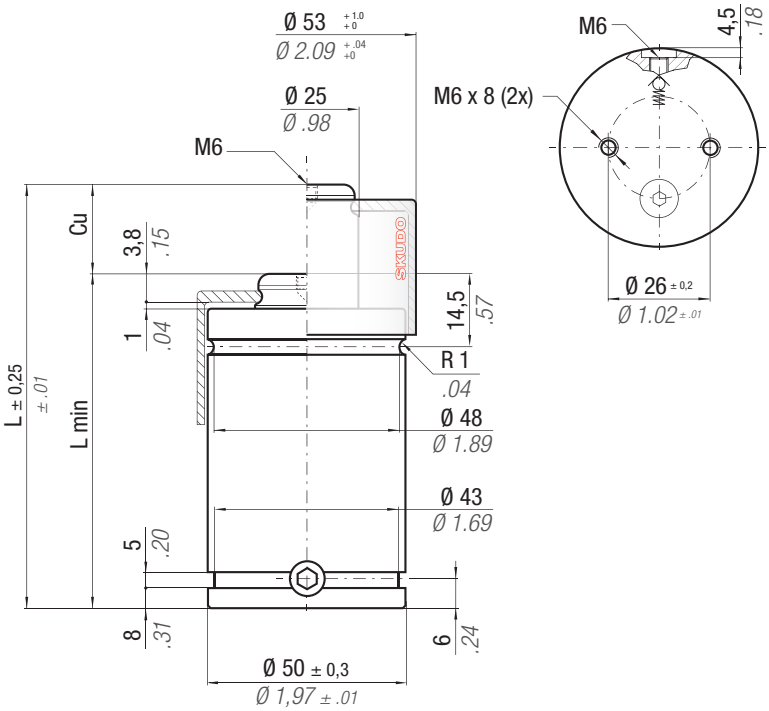

Il nuovo codice sarà fornito solo ad esaurimento del vecchio

The new code will be supplied only when the old will be out of stock

Der neue Kode wird geliefert nur wenn der alte nicht mehr im Lager ist

Le nouveau code sera fourni uniquement lorsque le vieux stock sera ecoulé

El nuevo código será suministrado sólo cuando el viejo está fuera de stock

O novo código irá ser fornecido apenas quando o antigo esgotar stock

easy MANIFOLD p. 241

* $F1_i$ = Isothermal end force at 100% Cu p. 18

** $F1_p$ = Polytrophic end force at 100% Cu

ACTIVE SAFETY

OSAS

USAS

OPAS

SKUDO

N_2	°F 32 - 176	°C 0 - 80	ΔP	P max	P min	S	SPM	Max Speed	Maintenance kit
			± 0,33 %/°C	150 bar *2175 psi*	20 bar *290 psi*	12,57 cm² *1.948 in²*	~ 50 - 100 (at 20°C)	0,8 m/s	39BMKE01800B

CODE PHASING OUT from 08/2012	NEW	Cu mm	Cu inch	L mm	L inch	L min mm	L min inch	F0 Initial force daN	F0 lb	$F1_i$ * End force daN	$F1_i$ lb	$F1_p$ ** End force daN	$F1_p$ lb	V0 cm³	V0 in³	~Kg	~lb	PED 2014/68/EU
KE 1800 - 006 - A	KE 1800 - 006 - B	6	0.24	66	2.60	60	2.36	1885 ± 5%	4238	3046	6847	3731	8388	23,0	1.40	0,63	1.39	✓
KE 1800 - 010 - A	KE 1800 - 010 - B	10	0.39	80	3.15	70	2.76			3125	7026	3860	8678	36,0	2.20	0,69	1.52	✓
KE 1800 - 016 - A	KE 1800 - 016 - B	16	0.63	106	4.17	90	3.54			2979	6698	3623	8145	63,0	3.84	0,81	1.79	✓
KE 1800 - 025 - A	KE 1800 - 025 - B	25	0.98	135	5.31	110	4.33			3133	7044	3874	8709	90,0	5.49	0,94	2.07	✓
KE 1800 - 032 - A	KE 1800 - 032 - B	32	1.26	162	6.38	130	5.12	150 bar *2175psi*		3106	6983	3830	8610	117,0	7.14	1,06	2.34	✓
KE 1800 - 040 - A	KE 1800 - 040 - B	40	1.57	190	7.48	150	5.91			3135	7049	3877	8716	145,0	8.85	1,19	2.62	✓
KE 1800 - 050 - A	KE 1800 - 050 - B	50	1.97	220	8.66	170	6.69	+ 20 °C *+68 °F*		3236	7275	4043	9089	172,0	10.49	1,31	2.89	✓
-	KE 1800 - 065 - B	65	2.56	271	10.67	206	8.11			3262	7333	4086	9186	221,0	13.48	1,53	3.37	✓

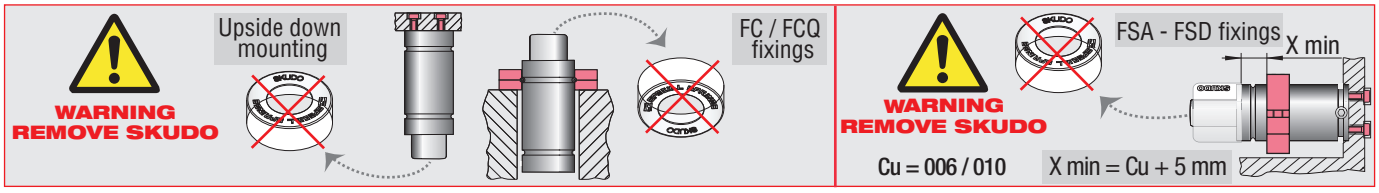

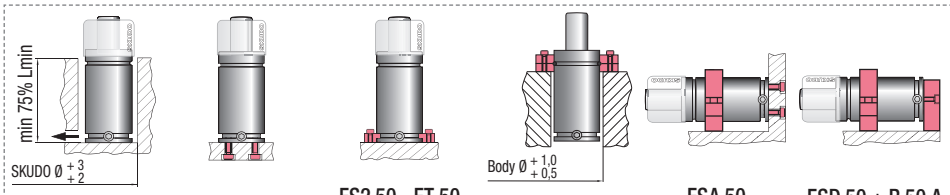

HOW TO ORDER p. 193

INSTALLATION GUIDELINE p. 203

KE

SPECIAL SPRINGS

ACTIVE SAFETY

OSAS

USAS

OPAS

SKUDO

Il nuovo codice sarà fornito solo ad esaurimento del vecchio

The new code will be supplied only when the old will be out of stock

Der neue Kode wird geliefert nur wenn der alte nicht mehr im Lager ist

Le nouveau code sera fourni uniquement lorsque le vieux stock sera ecoulé

El nuevo código será suministrado sólo cuando el viejo está fuera de stock

O novo código irá ser fornecido apenas quando o antigo esgotar stock

easy MANIFOLD p. 241

* $F1_i$ = Isothermal end force at 100% Cu p. 18

** $F1_p$ = Polytrophic end force at 100% Cu

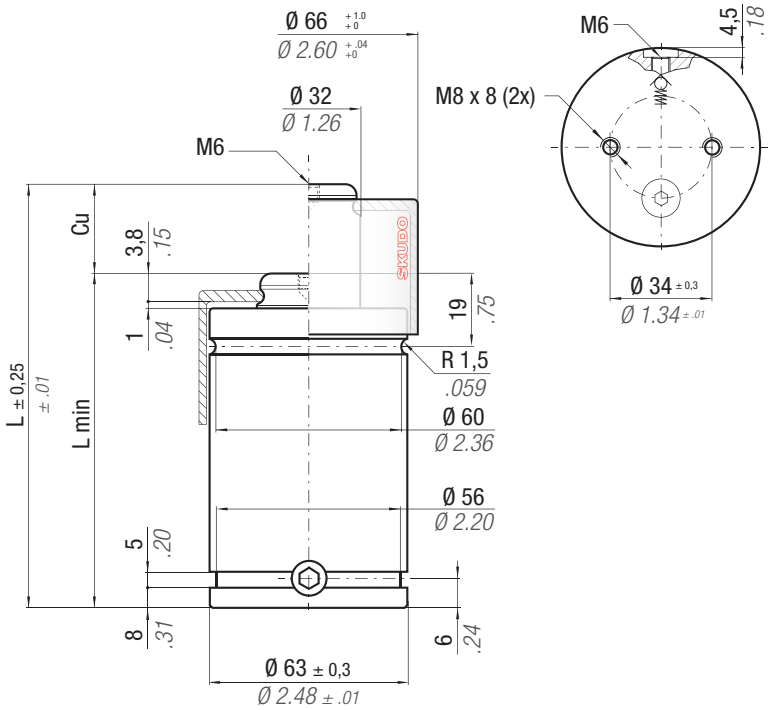

N2	°F 32 - 176 / °C 0 - 80	ΔP	P max	P min	S	SPM	Max Speed	Maintenance kit
		± 0,33 %/°C	150 bar *2175 psi*	20 bar *290 psi*	19,63 cm² *3.043 in²*	~ 80 - 100 (at 20°C)	0,8 m/s	39BMKE03000B

CODE PHASING OUT from 08/2012	NEW	Cu mm	Cu inch	L mm	L inch	L min mm	L min inch	F0 Initial force daN	F0 lb	$F1_i$ * End force daN	$F1_i$ lb	$F1_p$ ** End force daN	$F1_p$ lb	V0 cm³	V0 in³	~Kg	~lb	PED 2014/68/EU
KE 3000 - 010 - A	KE 3000 - 010 - B	10	0.39	85	3.35	75	2.95	2945 ± 5%	6620	5084	11429	6363	14305	53,0	3.23	1,23	2.71	✓
KE 3000 - 016 - A	KE 3000 - 016 - B	16	0.63	103	4.06	87	3.43			5362	12053	6829	15352	79,0	4.82	1,36	3.00	✓
KE 3000 - 025 - A	KE 3000 - 025 - B	25	0.98	130	5.12	105	4.13			5566	12512	7176	16132	119,0	7.26	1,55	3.42	✓
KE 3000 - 032 - A	KE 3000 - 032 - B	32	1.26	150	5.91	118	4.65	150 bar *2175psi*		5721	12861	7443	16733	147,0	8.97	1,69	3.73	✓
KE 3000 - 040 - A	KE 3000 - 040 - B	40	1.57	175	6.89	135	5.31			5722	12863	7445	16737	184,0	11.22	1,86	4.10	✓
KE 3000 - 050 - A	KE 3000 - 050 - B	50	1.97	205	8.07	155	6.10	+ 20 °C *+68 °F*		5778	12989	7542	16955	227,0	13.85	2,07	4.56	✓
-	KE 3000 - 065 - B	65	2.56	256	10.08	191	7.52			5630	12657	7287	16382	304,0	18.54	2,44	5.38	✓

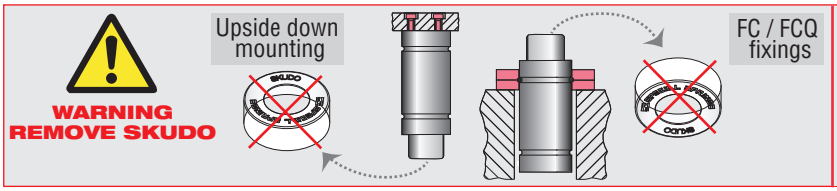

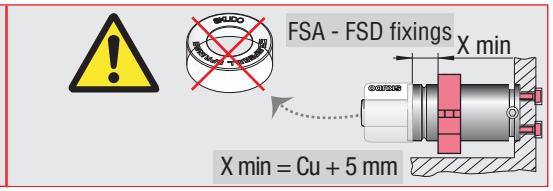

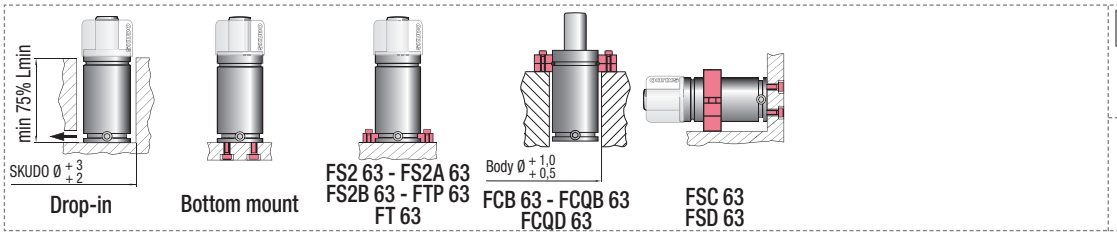

HOW TO ORDER p. 193

INSTALLATION GUIDELINE p. 203

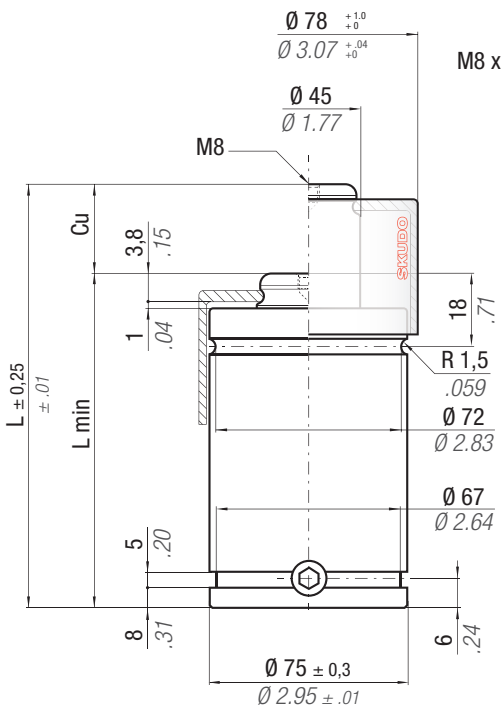

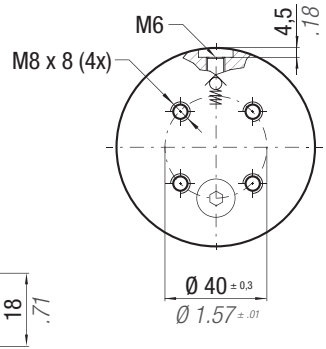

Il nuovo codice sarà fornito solo ad esaurimento del vecchio

The new code will be supplied only when the old will be out of stock

Der neue Kode wird geliefert nur wenn der alte nicht mehr im Lager ist

Le nouveau code sera fourni uniquement lorsque le vieux stock sera ecoulé

El nuevo código será suministrado sólo cuando el viejo está fuera de stock

O novo código irá ser fornecido apenas quando o antigo esgotar stock

easy MANIFOLD p. 241

* $F1_i$ = Isothermal end force at 100% Cu p. 18

** $F1_p$ = Polytrophic end force at 100% Cu

ACTIVE SAFETY

OSAS

USAS

OPAS

SKUDO

N_2	°F 32 - 176	°C 0 - 80	ΔP	P max	P min	S	SPM	Max Speed	Maintenance kit
			± 0,33 %/°C	150 bar / 2175 psi	20 bar / 290 psi	31,17 cm² / 4.831 in²	~ 80 - 100 (at 20°C)	0,8 m/s	39BMKE04700B

CODE PHASING OUT from 08/2012	NEW	Cu mm	Cu inch	L mm	L inch	L min mm	L min inch	F0 Initial force daN	F0 lb	$F1_i$ End force * daN	$F1_i$ lb	$F1_p$ End force ** daN	$F1_p$ lb	V0 cm³	V0 in³	~Kg	~lb	PED 2014/68/EU
KE 4700 - 010 - A	KE 4700 - 010 - B	10	0.39	80	3.15	70	2.76	4675 ± 5%	10510	8017	18023	10013	22510	86,0	5.25	1,62	3.57	✓
KE 4700 - 016 - A	KE 4700 - 016 - B	16	0.63	106	4.17	90	3.54			7467	16788	9112	20485	153,0	9.33	1,85	4.08	✓
KE 4700 - 025 - A	KE 4700 - 025 - B	25	0.98	135	5.31	110	4.33			7780	17491	9622	21631	224,0	13.66	2,10	4.63	✓
KE 4700 - 032 - A	KE 4700 - 032 - B	32	1.26	167	6.57	135	5.31	150 bar 2175psi		7447	16742	9079	20410	308,0	18.79	2,39	5.27	✓
KE 4700 - 040 - A	KE 4700 - 040 - B	40	1.57	200	7.87	160	6.30			7360	16547	8939	20096	393,0	23.97	2,68	5.91	✓
KE 4700 - 050 - A	KE 4700 - 050 - B	50	1.97	240	9.45	190	7.48	+ 20 °C +68 °F		7326	16469	8883	19970	496,0	30.26	3,03	6.68	✓
-	KE 4700 - 065 - B	65	2.56	273	10.75	208	8.19			7926	17818	9862	22171	565,0	34.47	3,30	7.28	✓

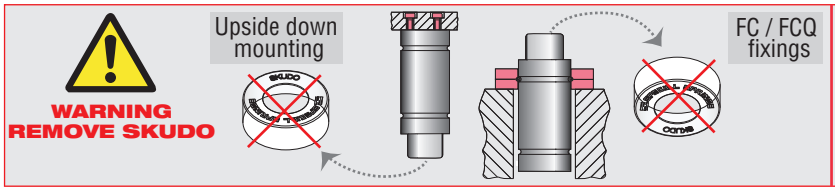

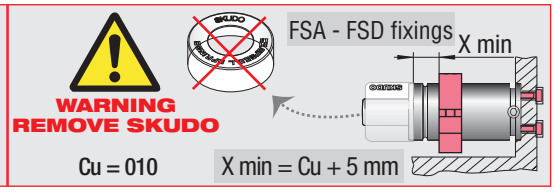

KE

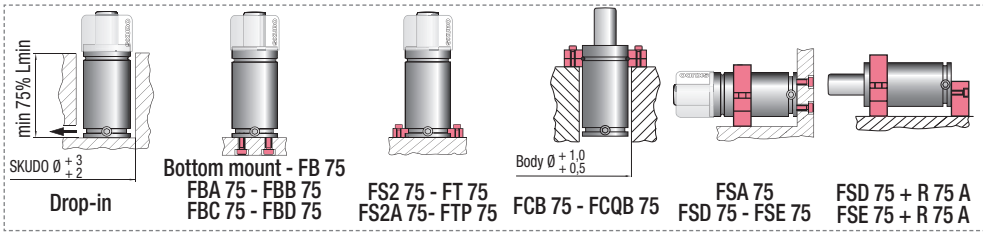

HOW TO ORDER p. 193

INSTALLATION GUIDELINE p. 203

KE 7500

SPECIAL SPRINGS

ACTIVE SAFETY

OSAS

USAS

OPAS

SKUDO

Il nuovo codice sarà fornito solo ad esaurimento del vecchio

The new code will be supplied only when the old will be out of stock

Der neue Kode wird geliefert nur wenn der alte nicht mehr im Lager ist

Le nouveau code sera fourni uniquement lorsque le vieux stock sera ecoulé

El nuevo código será suministrado sólo cuando el viejo está fuera de stock

O novo código irá ser fornecido apenas quando o antigo esgotar stock

easy MANIFOLD p. 241

* $F1_i$ = Isothermal end force at 100% Cu p. 18

** $F1_p$ = Polytrophic end force at 100% Cu

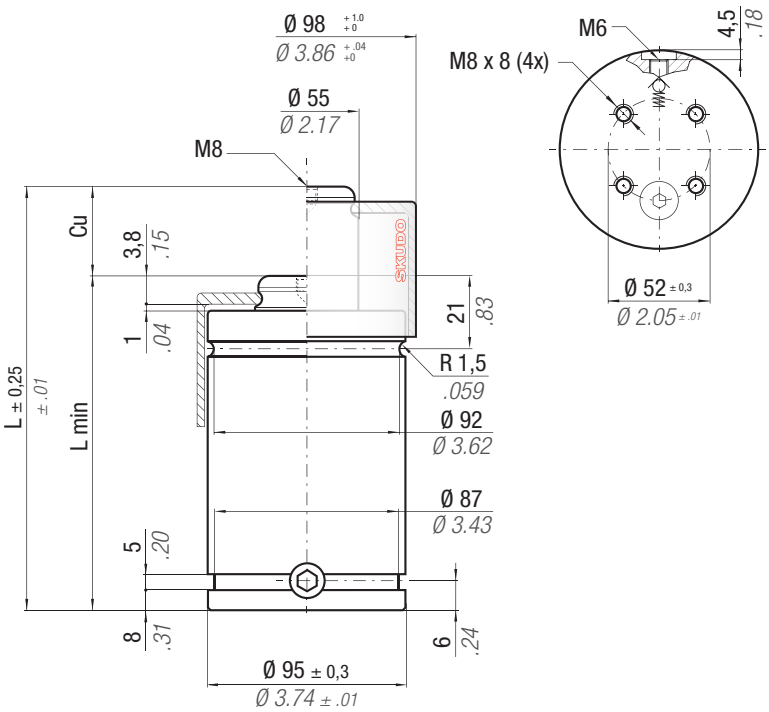

N2	°F 32 - 176 / °C 0 - 80	ΔP	P max	P min	S	SPM	Max Speed	Maintenance kit
		± 0,33 %/°C	150 bar *2175 psi*	20 bar *290 psi*	50,27 cm² *7.791 in²*	~ 80 - 100 (at 20°C)	0,8 m/s	39BMKE07500B

CODE PHASING OUT from 08/2012	NEW	Cu mm	Cu *inch*	L mm	L *inch*	L min mm	L min *inch*	Fo Initial force daN	Fo *lb*	$F1_i$ * End force daN	$F1_i$ *lb*	$F1_p$ ** End force daN	$F1_p$ *lb*	Vo cm³	Vo *in³*	~Kg	*~lb*	PED 2014/68/EU
KE 7500 - 010 - A	KE 7500 - 010 - B	10	*0.39*	90	*3.54*	80	*3.15*	7540 ± 5%	*16950*	11910	*26775*	14481	*32555*	158,0	*9.64*	2,89	*6.37*	✓
KE 7500 - 016 - A	KE 7500 - 016 - B	16	*0.63*	116	*4.57*	100	*3.94*			11563	*25995*	13924	*31302*	266,0	*16.23*	3,26	*7.19*	✓
KE 7500 - 025 - A	KE 7500 - 025 - B	25	*0.98*	145	*5.71*	120	*4.72*			12169	*27357*	14901	*33499*	379,0	*23.12*	3,64	*8.02*	✓
KE 7500 - 032 - A	KE 7500 - 032 - B	32	*1.26*	182	*7.17*	150	*5.91*	150 bar *2175psi*		11486	*25821*	13800	*31024*	540,0	*32.94*	4,18	*9.22*	✓
KE 7500 - 040 - A	KE 7500 - 040 - B	40	*1.57*	210	*8.27*	170	*6.69*			11697	*26297*	14138	*31783*	652,0	*39.77*	4,56	*10.05*	✓
KE 7500 - 050 - A	KE 7500 - 050 - B	50	*1.97*	255	*10.04*	205	*8.07*	+ 20 °C	*+68 °F*	11502	*25857*	13825	*31080*	841,0	*51.30*	5,19	*11.44*	✓
-	KE 7500 - 065 - B	65	*2.56*	279	*10.98*	214	*8.43*			12826	*28834*	15978	*35920*	907,0	*55.33*	5,46	*12.40*	✓

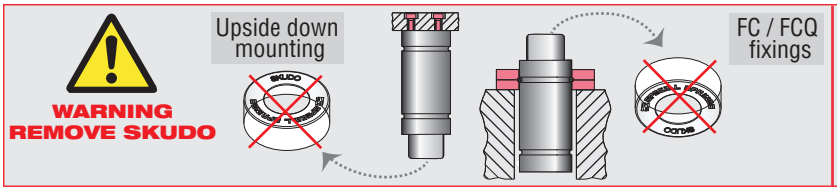

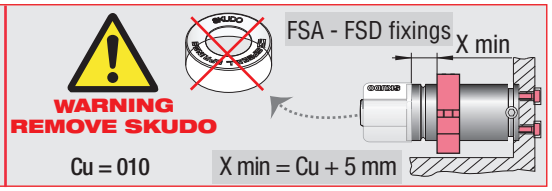

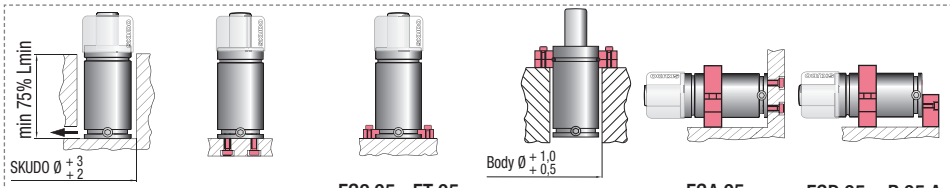

HOW TO ORDER p. 193

INSTALLATION GUIDELINE p. 203

KE 12000

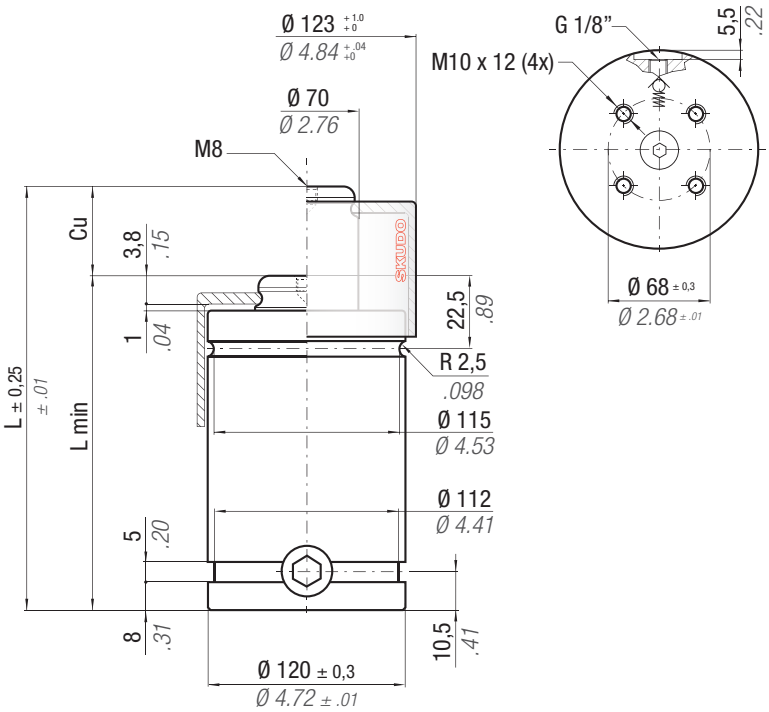

Il nuovo codice sarà fornito solo ad esaurimento del vecchio

The new code will be supplied only when the old will be out of stock

Der neue Kode wird geliefert nur wenn der alte nicht mehr im Lager ist

Le nouveau code sera fourni uniquement lorsque le vieux stock sera ecoulé

El nuevo código será suministrado sólo cuando el viejo está fuera de stock

O novo código irá ser fornecido apenas quando o antigo esgotar stock

easy MANIFOLD p. 241

* $F1_i$ = Isothermal end force at 100% Cu p. 18

** $F1_p$ = Polytrophic end force at 100% Cu

ACTIVE SAFETY

OSAS

USAS

OPAS

SKUDO

N_2	°F 32 - 176	°C 0 - 80	ΔP	P max	P min	S	SPM	Max Speed	Maintenance kit
			± 0,33 %/°C	150 bar / 2175 psi	20 bar / 290 psi	78,54 cm² / 12.174 in²	~ 50 - 100 (at 20°C)	0,8 m/s	39BMKE12000B

CODE PHASING OUT from 08/2012	NEW	Cu mm	Cu inch	L mm	L inch	L min mm	L min inch	F0 Initial force daN	F0 lb	$F1_i$ * End force daN	$F1_i$ lb	$F1_p$ ** End force daN	$F1_p$ lb	V0 cm³	V0 in³	~Kg	~lb	PED 2014/68/EU
KE 12000 - 010 - A	KE 12000 - 010 - B	10	0.39	100	3.94	90	3,54	11780 ± 5%	26482	17843	40113	21398	48105	267,0	16.29	5,49	12.10	✓
KE 12000 - 016 - A	KE 12000 - 016 - B	16	0.63	126	4.96	110	4,33			17646	39670	21084	47399	436,5	26.63	6,11	13.47	✓
KE 12000 - 025 - A	KE 12000 - 025 - B	25	0.98	155	6.10	130	5,12			18657	41943	22704	51041	613,0	37.39	6,76	14.90	✓
KE 12000 - 032 - A	KE 12000 - 032 - B	32	1.26	187	7.36	155	6,10	150 bar 2175psi		18166	40838	21913	49262	824,0	50.26	7,54	16.62	✓
KE 12000 - 040 - A	KE 12000 - 040 - B	40	1.57	220	8.66	180	7,09			18098	40687	21805	49020	1037,0	63.26	8,31	18.32	✓
KE 12000 - 050 - A	KE 12000 - 050 - B	50	1.97	260	10.24	210	8,27	+ 20 °C +68 °F		18116	40727	21834	49085	1294,0	78.93	9,25	20.9	✓
-	KE 12000 - 065 - B	65	2.56	320	12.60	255	10.04			18133	40765	21860	49143	1679,0	102.42	10,66	23.50	✓

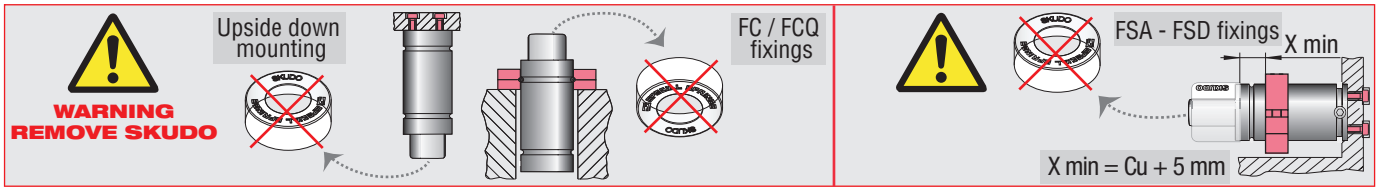

KE

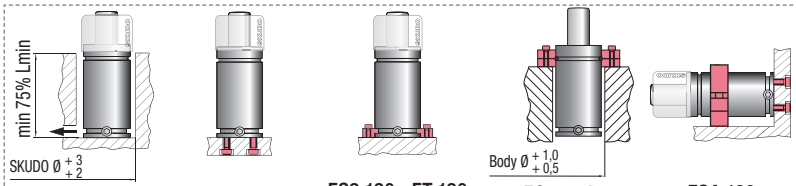

HOW TO ORDER p. 193

INSTALLATION GUIDELINE p. 203

KE 18500

SPECIAL SPRINGS

ACTIVE SAFETY

OSAS

USAS

OPAS

SKUDO

Il nuovo codice sarà fornito solo ad esaurimento del vecchio

The new code will be supplied only when the old will be out of stock

Der neue Kode wird geliefert nur wenn der alte nicht mehr im Lager ist

Le nouveau code sera fourni uniquement lorsque le vieux stock sera ecoulé

El nuevo código será suministrado sólo cuando el viejo está fuera de stock

O novo código irá ser fornecido apenas quando o antigo esgotar stock

easy MANIFOLD p. 241

* $F1_i$ = Isothermal end force at 100% Cu p. 18

** $F1_p$ = Polytrophic end force at 100% Cu

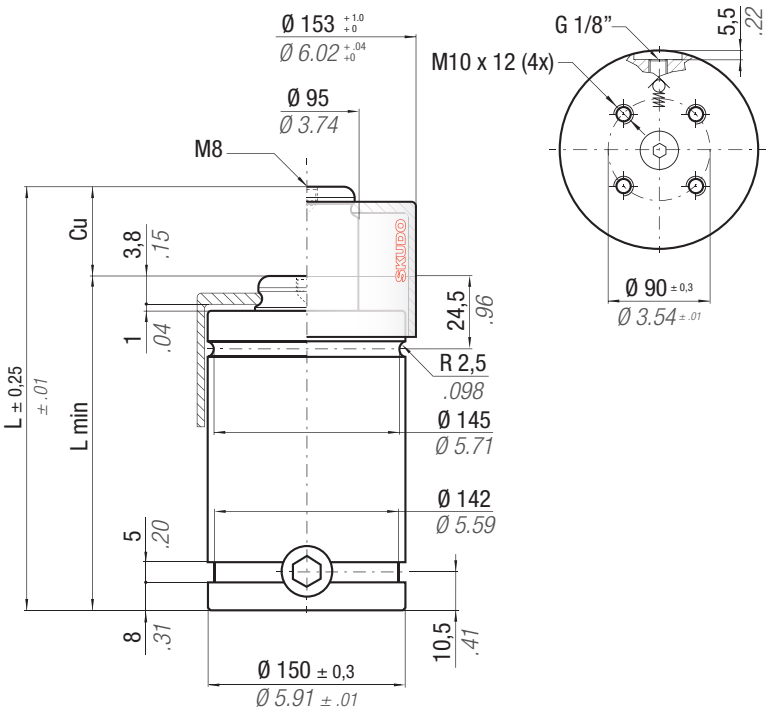

N2	°F 32 - 176 / °C 0 - 80	ΔP	P max	P min	S	SPM	Max Speed	Maintenance kit
		± 0,33 %/°C	150 bar / 2175 psi	20 bar / 290 psi	122,72 cm² / 19.022 in²	~ 50 - 100 (at 20°C)	0,8 m/s	39BMKE18500B

CODE PHASING OUT from 08/2012	NEW	Cu mm	Cu inch	L mm	L inch	L min mm	L min inch	F0 Initial force daN	F0 lb	$F1_i$ * End force daN	$F1_i$ lb	$F1_p$ ** End force daN	$F1_p$ lb	V0 cm³	V0 in³	~Kg	~lb	PED 2014/68/EU
KE 18500 - 010 - A	KE 18500 - 010 - B	10	0.39	110	4.33	100	3.94	18410 ± 5%	41386	25880	58181	30288	68090	493,0	30.07	9,31	20.53	✓
KE 18500 - 016 - A	KE 18500 - 016 - B	16	0.63	136	5.35	120	4.72			26201	58903	30788	69214	765,0	46.67	10,28	22.66	✓
KE 18500 - 025 - A	KE 18500 - 025 - B	25	0.98	165	6.50	140	5.51			27771	62431	33260	74771	1050,0	64.05	11,30	24.91	✓
KE 18500 - 032 - A	KE 18500 - 032 - B	32	1.26	197	7.76	165	6.50	150 bar 2175psi		27347	61479	32588	73261	1388,0	84.67	12,51	27.58	✓
KE 18500 - 040 - A	KE 18500 - 040 - B	40	1.57	235	9.25	195	7.68			26947	60580	31957	71842	1791,0	109.25	13,93	30.71	✓
KE 18500 - 050 - A	KE 18500 - 050 - B	50	1.97	270	10.63	220	8.66	+ 20 °C +68 °F		27505	61833	32838	73823	2142,0	130.66	15,19	33.49	✓
-	KE 18500 - 065 - B	65	2.56	323	12.72	258	10.16			28055	63070	33713	75790	2674,0	163.11	17,10	37.70	✓

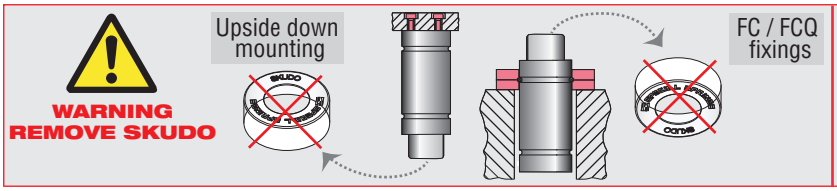

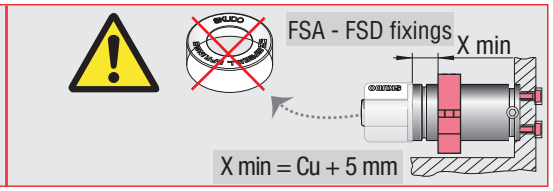

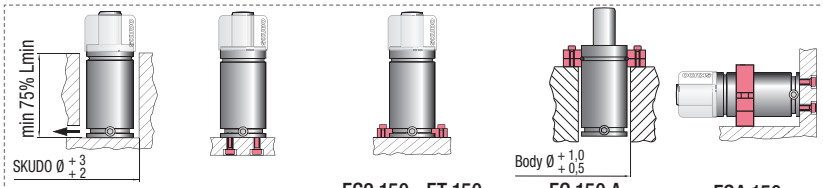

HOW TO ORDER p. 193

INSTALLATION GUIDELINE p. 203

INSTALLATION GUIDELINE

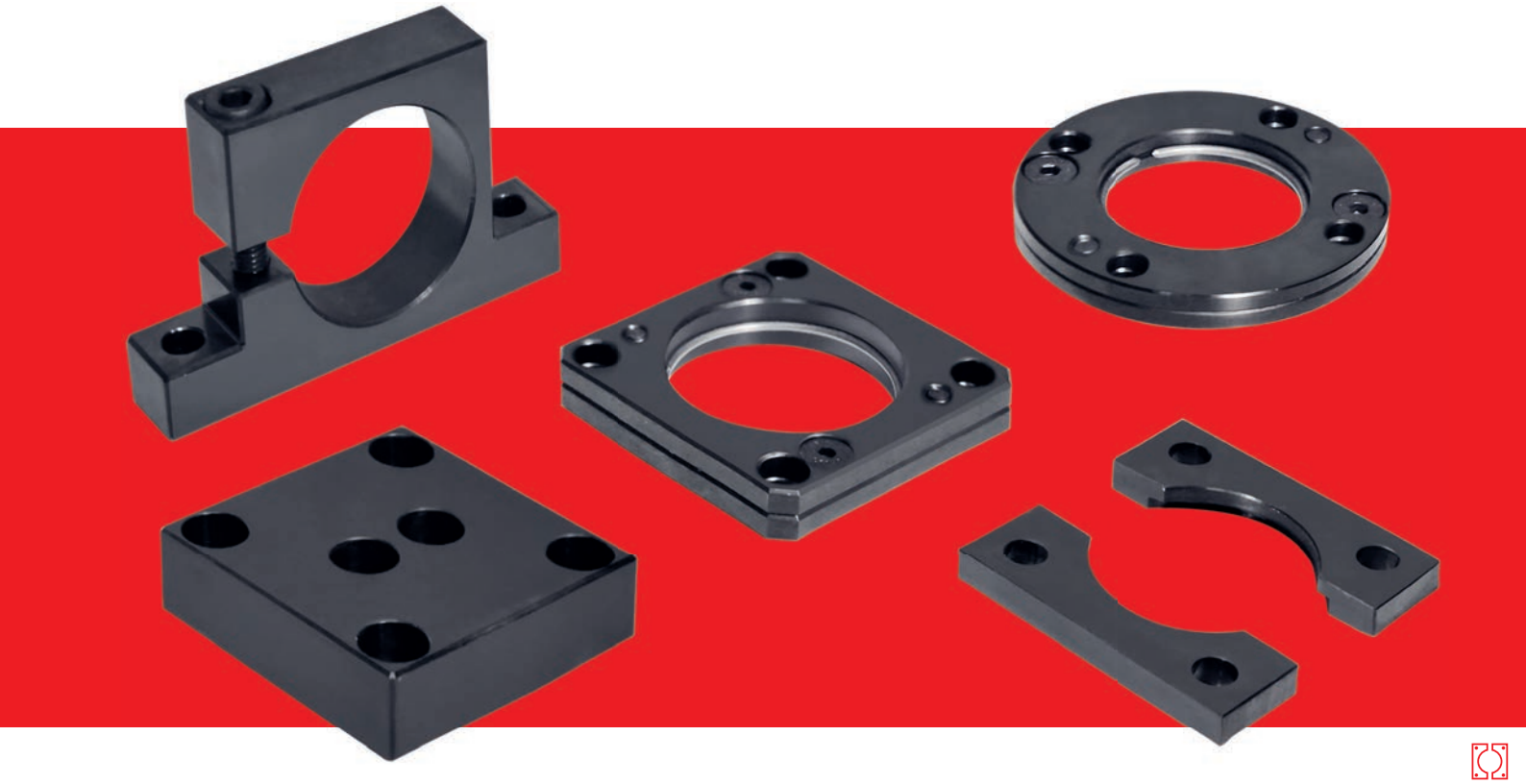

INSTALLATION GUIDELINE

IT Un corretto fissaggio delle molle a gas previene danni ai prodotti e gravi pericoli agli operatori.
EN A correct fixing of the gas springs prevents damages to products and serious dangers to operators.
DE Die richtige Befestigung der Gasdruckfeder verhindert Schäden an den Produkten und ernsthafte Gefahren für das Personal.
FR La fixation correcte du ressort à gaz évite des dommages aux produits et des dangers graves pour les opérateurs.
ES Una correcta fijación del cilindro de gas previene daños a los productos y graves peligros para los operadores.
PT Uma correta fixação do cilindro pode previnir danos ao produto e tambem ao operador.

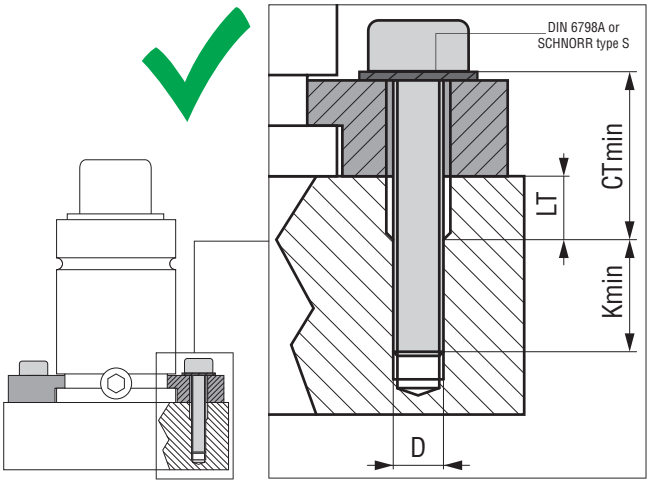

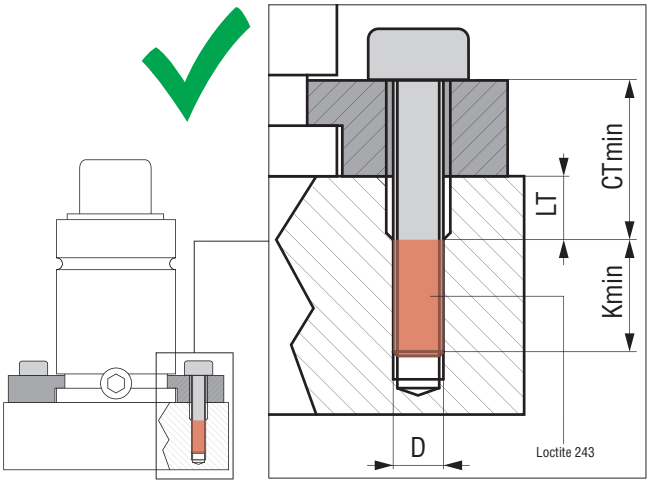

CTmin	Kmin	LT
Lunghezza libera (min. 2 x D)	Minimo impegno viti (acciaio = min. 1.5 x D, ghisa = min. 2 x D)	Allargamento per garantire CTmin
Free length (min. 2 x D)	Minimum thread engagement (steel = min. 1.5 x D, cast iron = min. 2 x D)	Widening to ensure CTmin
Klemmlänge (min. 2 x D)	Mindest-Einschraublänge (Stah = min. 1.5 x D, Guss = min. 2 x D)	Bohrung zur Gewährleistung der CTmin
Longueur libre (min. 2 x D)	Longueur minimum à visser (acier = min. 1.5 x D, fonte = min. 2 x D)	Élargissement pour assurer CTmin
Longitud libre (min. 2 x D)	Recubrimiento mínimo rosca (acero = min. 1.5 x D, hierro fundido = min. 2 x D)	Ampliación para garantizar CTmin
Comprimento livre (min. 2 x D)	Comprimento minimo roscado (aço 1,5 x D – Fundido 2,0 x D)	Alivio para garantir o CT min

IT Utilizzare sempre apposito frenafiletti e/o rondelle di sicurezza su tutte le viti di fissaggio. (Non rappresentate nei disegni delle pagine seguenti).

EN Always use the suitable threadlocker and/or safety washers on all fixing screws. (They are not represented in the drawings in the following pages of the catalog).

DE Verwenden Sie immer geeignete Schraubensicherungen und/oder Sicherungsscheiben an allen Befestigungsschrauben. (Nicht in den Zeichnungen auf den folgenden Seiten dargestellt).

FR Utilisez toujours le frein filet approprié et/ou les rondelles de sécurité sur toutes les vis de fixation. (Ils ne sont pas représentés sur les dessins dans les pages suivantes du catalogue).

ES Utilice siempre un fijador de roscas adecuado y/o arandelas de seguridad en todos los tornillos de fijación. (No son representados en los diseños de las paginas siguientes).

PT Sempre utilizar o trava roscas e/ou arruela de segurança em todos os parafusos de fixação (não estão representados nas proximas paginas do catalogo).

Rondelle di sicurezza - Safety Washers Sicherungsscheiben - Rondelles de sécurité Arandelas de seguridad - Arruela de segurança	
Only for ML, MP, MQ series Conical spring washer provided by Special Springs	 DIN 6798A or SCHNORR type S

IT L' uso di viti di classe superiore alla 8.8, come 9.8, 10.9 e 12.9, è sempre possibile. Si raccomanda di NON SUPERARE i valori della coppia di serraggio indicati per la classe 8.8 per qualsiasi classe di viti utilizzata (vedi pag. 207).

EN It is always possible to use screws belonging to Classes higher than 8.8, such as 9.8, 10.9 and 12.9. Do NOT EXCEED the values of the tightening torque valid for Class 8.8 for any of the screw's Classes you may use (see page 207 of the Catalogue).

DE Die Verwendung von Schrauben von höheren Klassen als 8.8, wie 9.8, 10.9 und 12.9 ist immer möglich. Es wird empfohlen, die für die Klasse 8.8 angegebenen Anziehdrehmomente für alle verwendeten Schraubenklassen nicht zu überschreiten.

FR L' Il est toujours possible d'utiliser des vis appartenant aux classes supérieures à 8.8, telles que 9.8, 10.9 et 12.9. NE PAS DÉPASSER les valeurs du couple de serrage indiquées pour la classe 8.8 pour n'importe quelle classe de résistance que vous allez utiliser (voir page 207 du catalogue).

ES Siempre es posible el uso de tornillos pertenecientes a clases superiores a 8.8, como 9.8, 10.9 y 12.9. Se recomienda NO EXCEDER los valores de torque indicados para la clase 8.8 para cualquier clase de tornillos utilizados (consulte la página 207).

PT Sempre é possível usar parafusos pertencentes a classes superiores a 8.8, como 9.8, 10.9 e 12.9. NÃO SUPERAR os valores do torque recomendado para os parafusos da classe 8.8, mesmo que esteja utilizando parafusos com classes diferentes, (ver página 207).

INSTALLATION GUIDELINE

IT Molla a gas con fori di fissaggio in cui il valore di A è maggiore del valore D (esempio SC3000 con fori di fissaggio M8x13).
EN Gas spring with fixing holes for which value A is bigger than value D (e.g. SC3000 with fixing holes M8x13).
DE Gasdruckfeder mit Befestigungsbohrungen bei denen der Wert A größer als der Wert D ist (Beispiel SC3000 mit Befestigungsbohrungen M8x13).
FR Ressort à gaz avec trous de fixation dans lequel la valeur A est supérieure à la valeur D (par exemple, SC3000 avec trous de fixation M8x13).
ES Cilindro de gas con agujeros de fijación en el que el valor A es mayor que el valor D (ejemplo SC3000 con agujeros de fijación M8x13).
PT Cilindros com furos de fixação que a medida A é maior que a medida D (ex. SC3000 com furos de fixação M8x13).

Installation Example: A > D

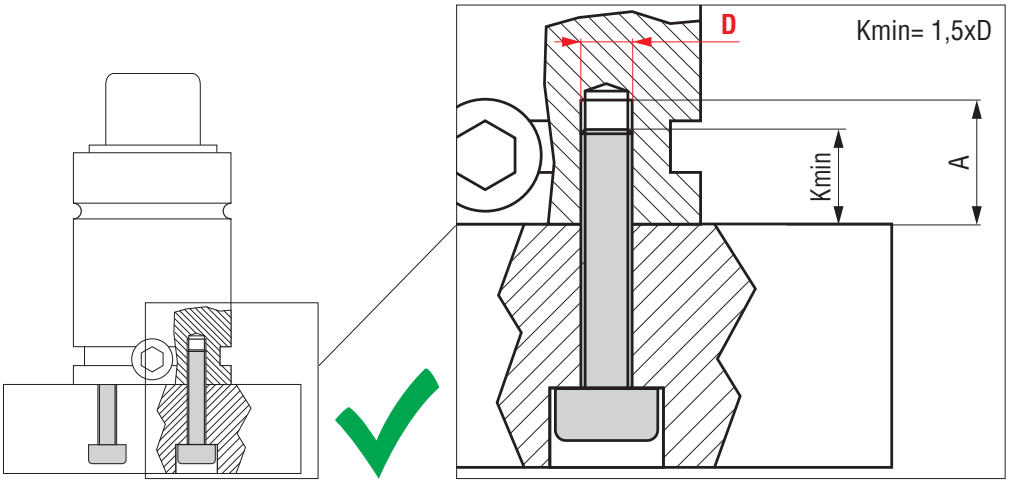

IT Molla a gas in cui il valore A è minore del valore D (esempio RV1000 con fori di fissaggio M8x6). Attenzione: in questi casi utilizzare viti con lunghezza tale da impegnare l'intera profondità utile di fissaggio.

EN Gas spring with fixing holes for which value A is smaller than value D (e.g. RV1000 with fixing holes M8x6). In such cases, be careful to use screws with a length long enough to employ the whole usable fixing depth.

DE Gasdruckfeder bei der der Wert A kleiner als der Wert D ist (Beispiel RV1000 mit Befestigungsbohrungen M8x6). Achtung: Verwenden Sie in diesen Fällen Schrauben mit einer Länge, die über die gesamte Einschraublänge reicht.

FR Ressort à gaz avec trous de fixation dans lequel la valeur A est inférieure à la valeur D (par exemple, RV1000 avec trous de fixation M8x6). Dans ce cas, veillez à utiliser des vis suffisamment longues pour utiliser toute la profondeur de fixation utilisable.

ES Cilindro de gas en el que el valor A es menor que el valor D (ejemplo RV1000 con agujeros de fijación M8x6). Atención: en estos casos utilice tornillos con tal longitud para enganchar toda la profundidad útil de fijación.

PT Cilindros que a medida A é menor que a medida D (ex. RV1000 com furos de fixação M8x6). Neste caso, atentar para que o comprimento do parafuso seja suficiente para garantir o comprimento minimo de roscado na placa.

Installation Example: A ≤ D

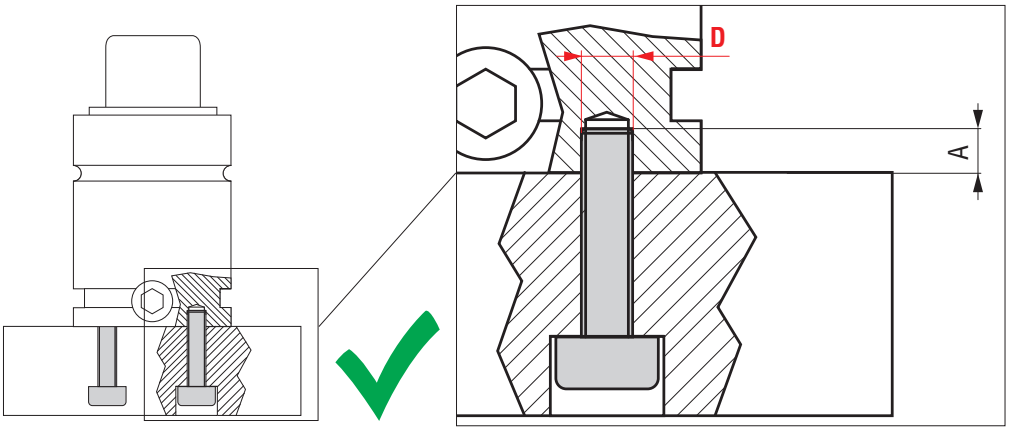

INSTALLATION GUIDELINE

IT Le viti di fissaggio non devono mai essere sollecitate direttamente dal carico agente sulla molla a gas.
EN Fixing screws shall never be directly strained by the load acting on the gas spring.
DE Die Befestigungsschrauben dürfen niemals direkt durch die auf die Gasdruckfeder wirkende Last belastet werden.
FR Les vis de fixation ne doivent jamais être directement sollicitées par la charge agissant sur le ressort à gaz.
ES Los tornillos de fijación nunca deben ser estresados directamente por la carga que actúa sobre el cilindro de gas.
PT Os parafusos de fixação jamais devem receber diretamente a carga do cilindro.

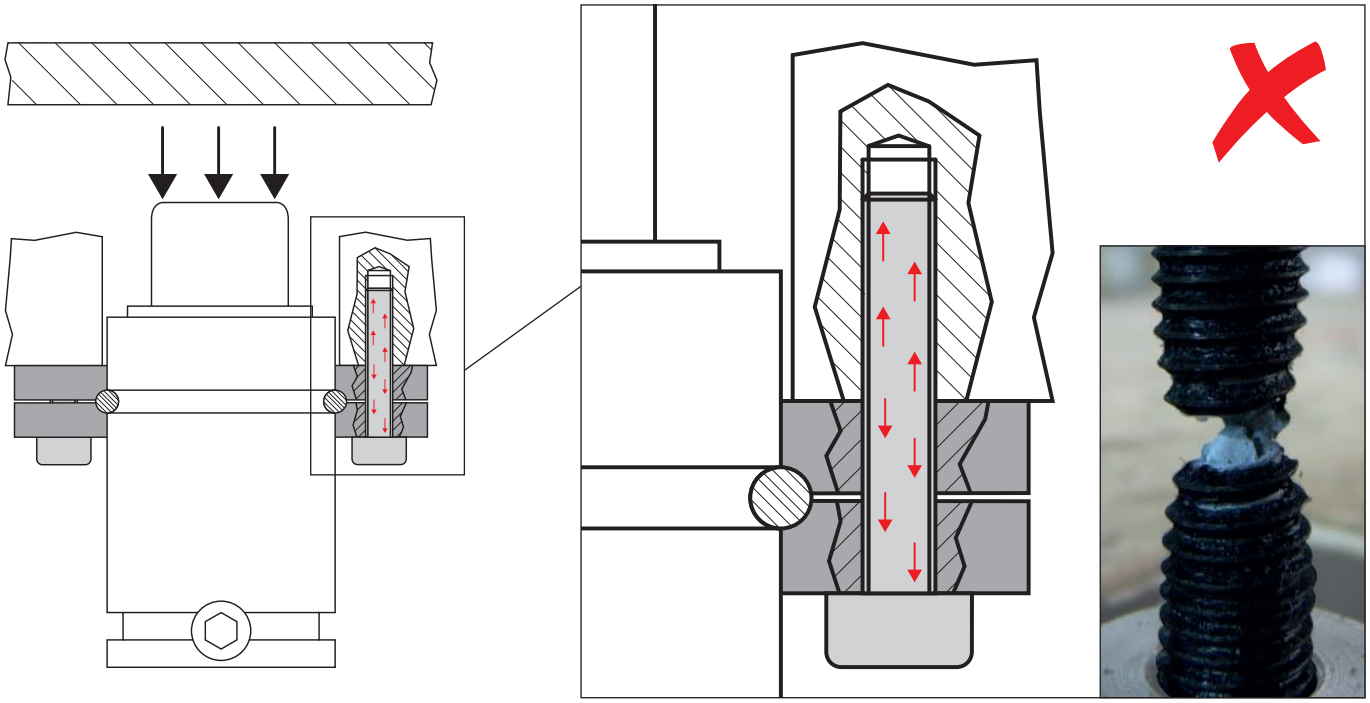

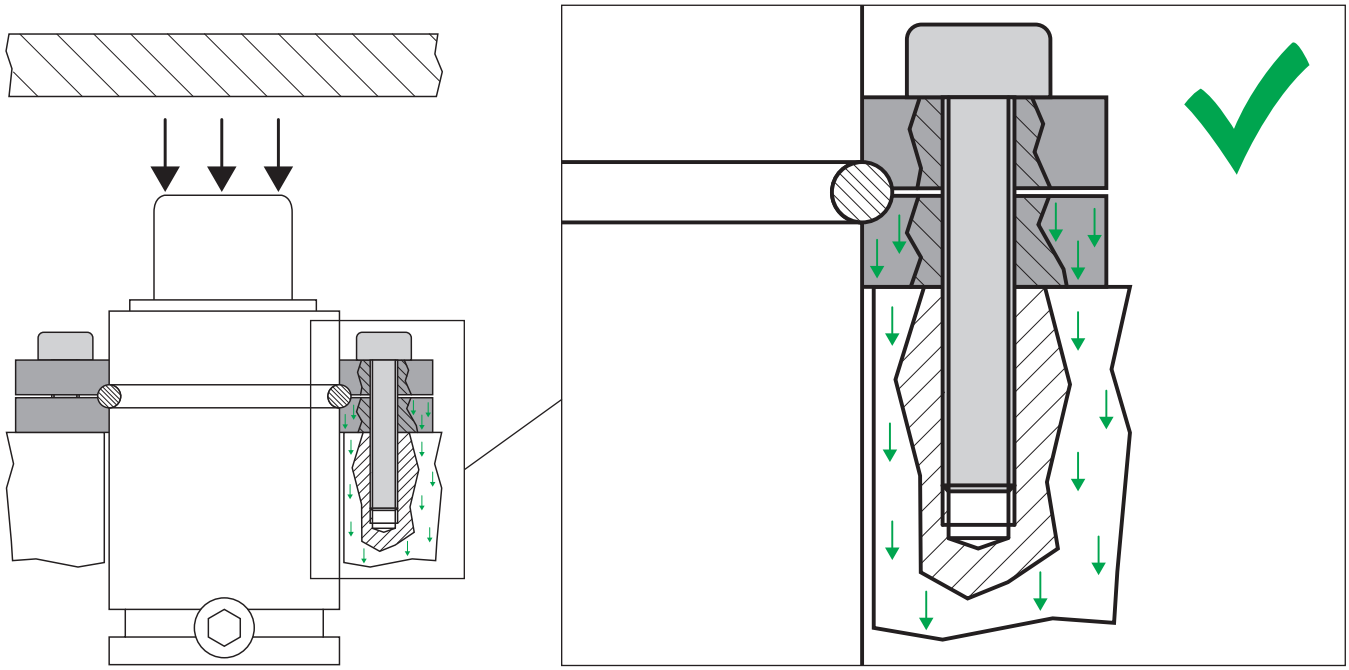

INSTALLATION GUIDELINE

IT Rispettare le coppie di serraggio prescritte e verificare sempre lo stato delle molle a gas e dei fissaggi ad ogni intervento sullo stampo.
EN Respect the specified tightening torques and verify always the condition of gas springs and fixings at each intervention on the die.
DE Beachten Sie die vorgeschriebenen Anziehdrehmomente und überprüfen Sie bei jedem Eingriff am Werkzeug den Zustand der Gasdruckfedern und Befestigungen.
FR Respectez les couples de serrage spécifiés et vérifiez les conditions des ressorts à gaz et des fixations à chaque intervention sur le moule.
ES Respete los pares de apriete indicados y verifique las condiciones de los resortes de gas y de las fijaciones en cada intervención en el troquel.
PT Respeitar o torque dos parafusos especificado e a cada parada para manutenção da ferramenta deve ser verificado as condições dos cilindros e das flanges.

UNI EN ISO 21269:2007 class ≥ 8.8	M5	M6	M8	M10	M12	M 16
Torque force	6 Nm	10 Nm	24 Nm	50 Nm	84 Nm	205 Nm

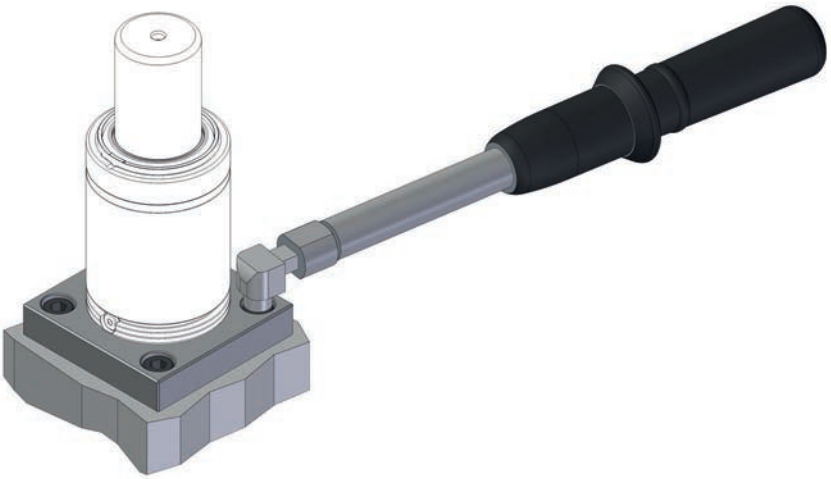

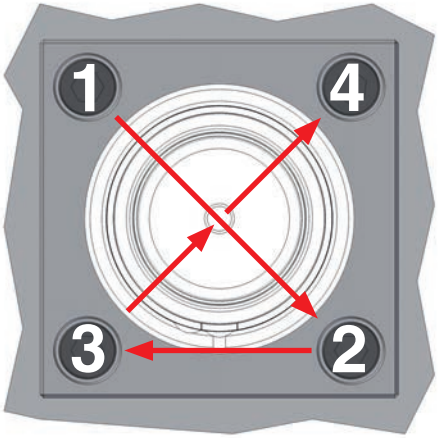

IT Serrare tutte le viti di fissaggio seguendo l'ordine a croce (1, 2, 3, 4) applicando la coppia di serraggio corretta. In questo modo la molla a gas sarà perfettamente posizionata.

EN Tighten all fixing screws by following the order shown in the image (1, 2, 3, 4) and by applying the correct tightening torque. In doing so, the gas springs will be perfectly positioned.

DE Alle Befestigungsschrauben über Kreuz in der Reihenfolge 1, 2, 3, 4 (s. Bild) mit dem richtigen Anziehdrehmoment anziehen. Auf diese Weise wird die Gasdruckfeder perfekt positioniert.

FR Serrez toutes les vis de fixation en respectant l'ordre indiqué sur l'image (1, 2, 3, 4) et en appliquant le couple de serrage approprié. Ce faisant, les ressorts à gaz seront parfaitement positionnés.

ES Apriete todos los tornillos de fijación siguiendo el orden que se muestra en la imagen (1, 2, 3, 4) y aplicando el par de apriete correcto. Al hacerlo, los resortes de gas estarán perfectamente posicionados.

PT Os parafusos devem ser apertados seguindo a ordem do desenho (1,2,3,4) e aplicado o torque correto. Dessa forma os cilindrso estarão perfeitamente fixados.

INSTALLATION GUIDELINE - DROP-IN

Esempi di installazione - Installation examples - Montagebeispiele - Exemples d'installation - Ejemplos de instalación - Exemplo de instalação

VERTICAL FIXING

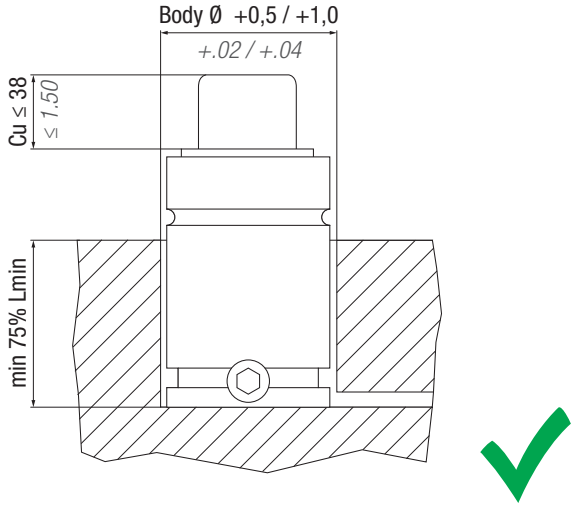

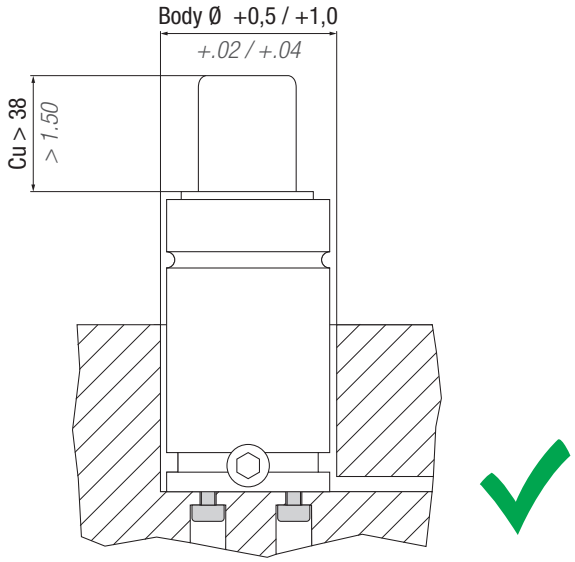

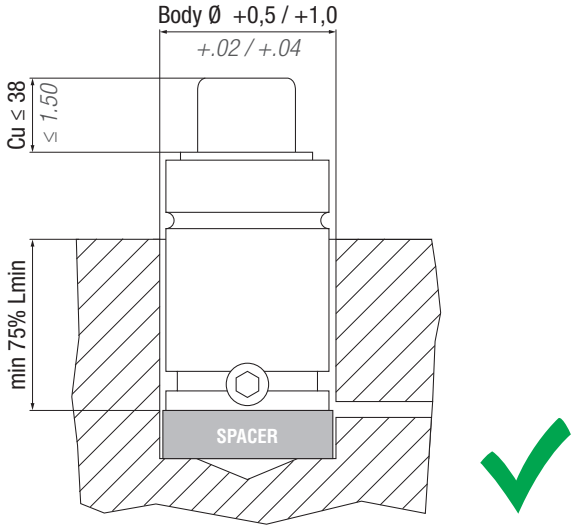

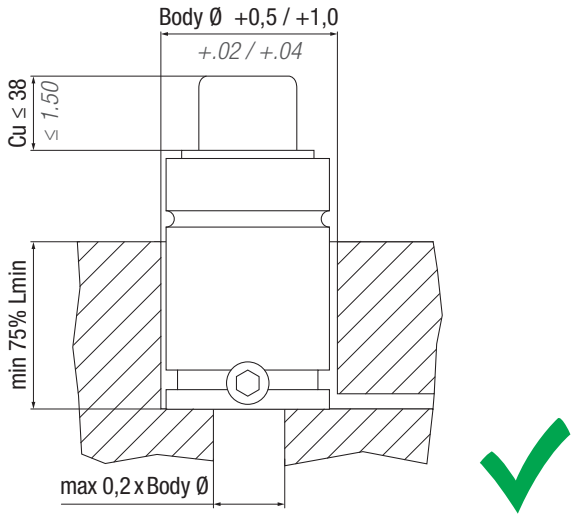

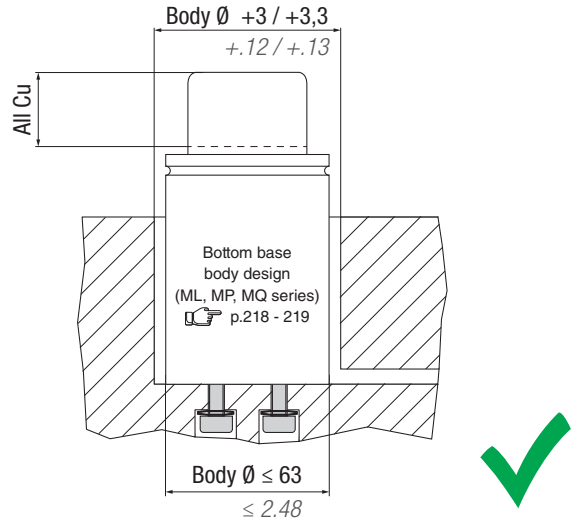

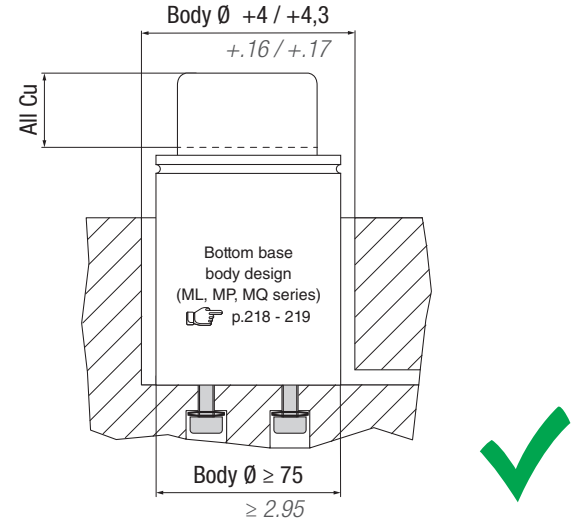

All dimensions in mm / *inch*

INSTALLATION GUIDELINE - DROP-IN

Esempi di installazione - Installation examples - Montagebeispiele - Exemples d'installation - Ejemplos de instalación - Exemplo de instalação

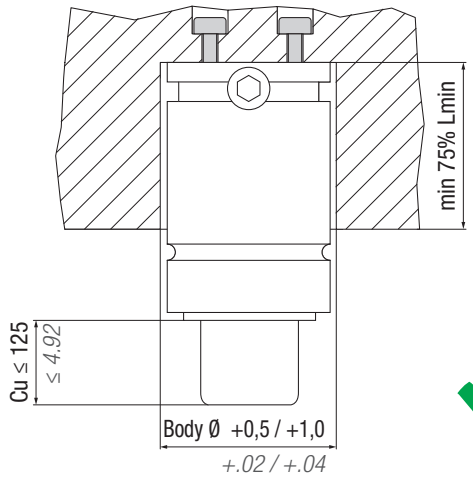

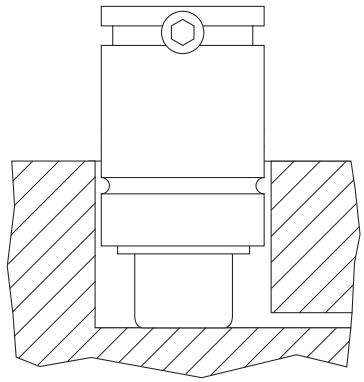

HORIZONTAL FIXING

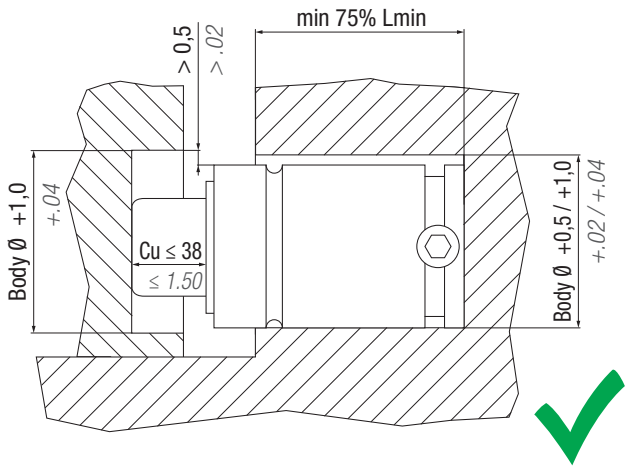

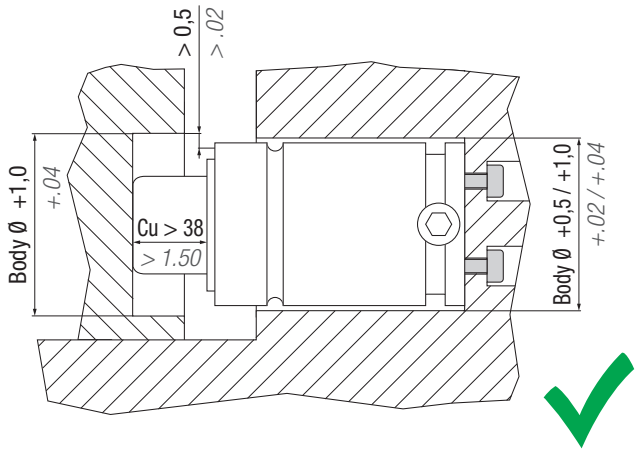

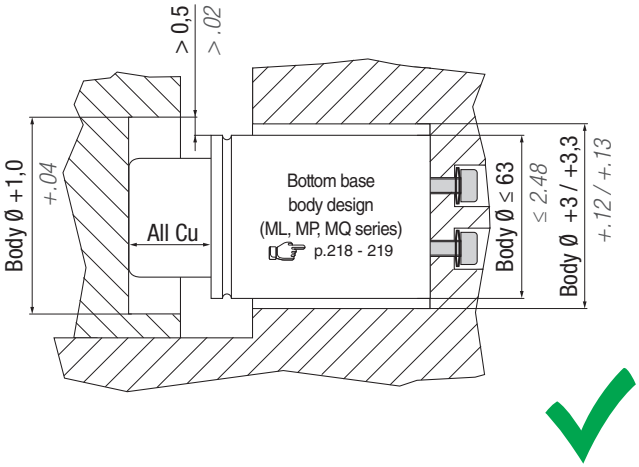

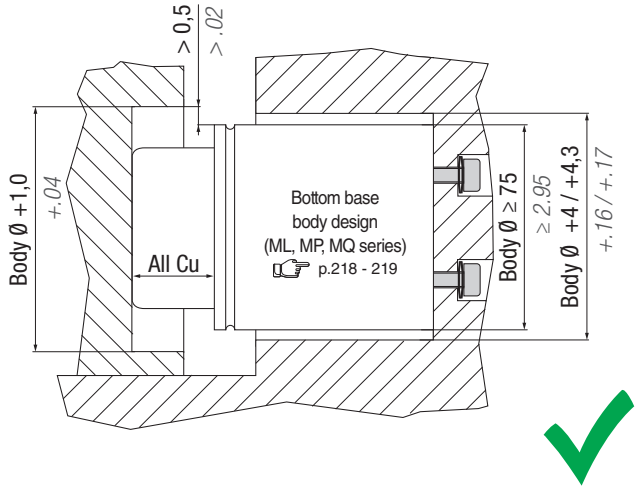

All dimensions in mm / *inch*

INSTALLATION GUIDELINE - BOTTOM MOUNT

Esempi di installazione - Installation examples - Montagebeispiele - Exemples d'installation - Ejemplos de instalación - Exemplo de instalação

FB - FBA - FBB - FBC - FBD - FBF

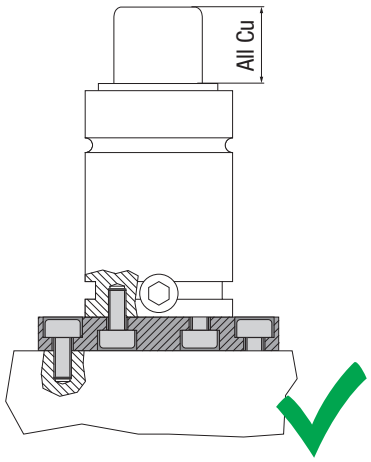

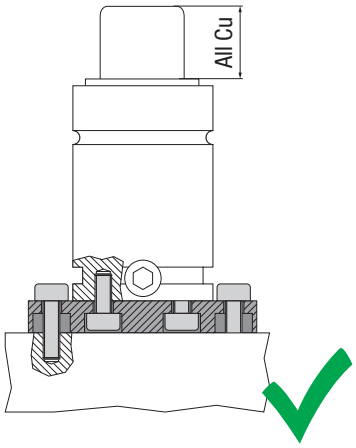

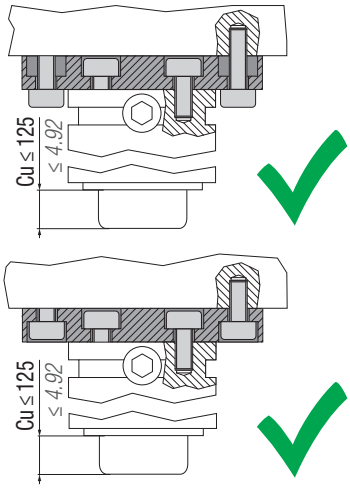

FBE

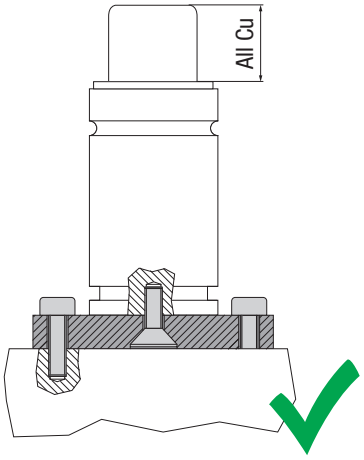

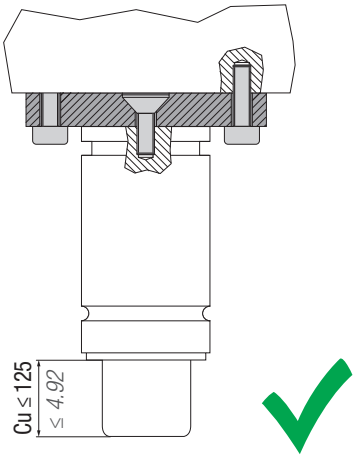

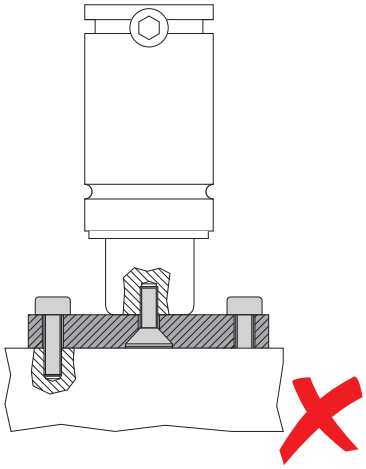

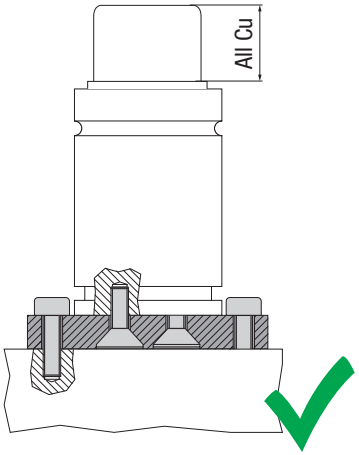

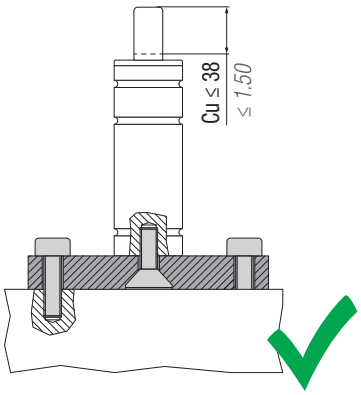

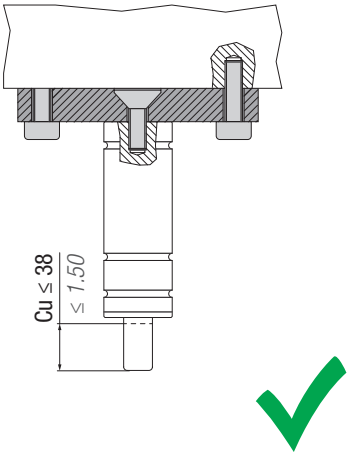

All dimensions in mm / *inch*

INSTALLATION GUIDELINE - TOP MOUNT

Esempi di installazione - Installation examples - Montagebeispiele - Exemples d'installation - Ejemplos de instalación - Exemplo de instalação

FCB - FCD - FC - FCC - FCQ - FCQC - FCQB

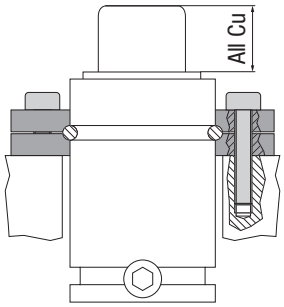

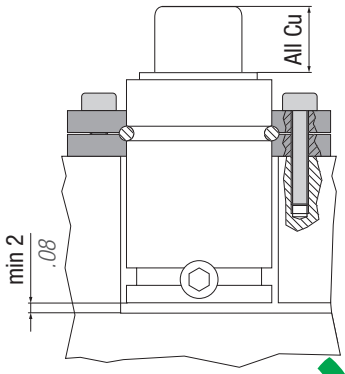

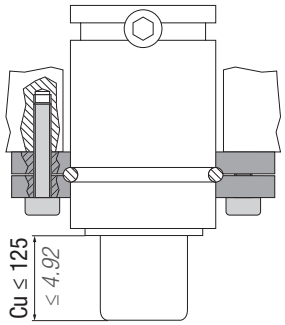

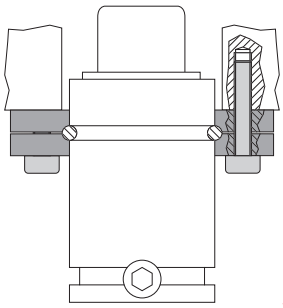

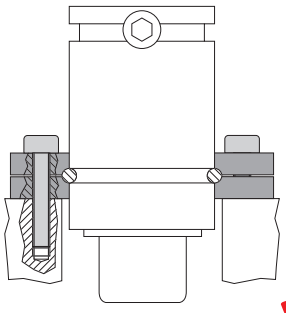

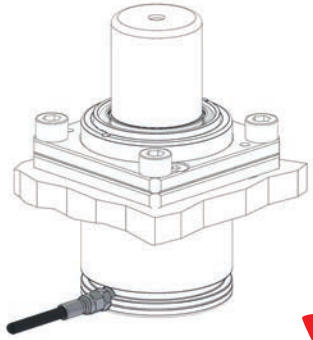

FC (for body cylinder Ø 12 ÷ 25)

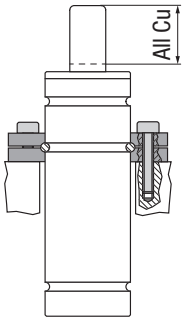

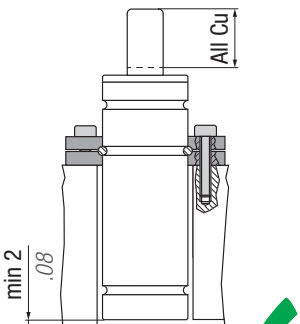

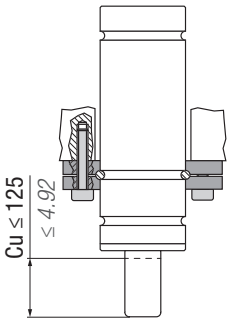

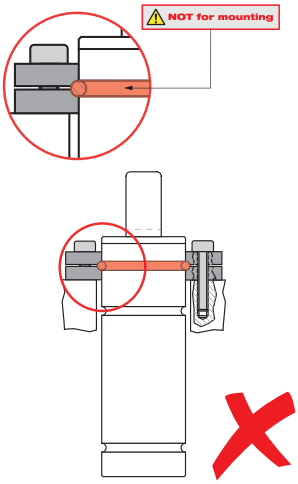

All dimensions in mm / *inch*

INSTALLATION GUIDELINE - BRACKET MOUNT

Esempi di installazione - Installation examples - Montagebeispiele - Exemples d'installation - Ejemplos de instalación - Exemplo de instalação

FS2 - FS2B - FS2A - FS2C

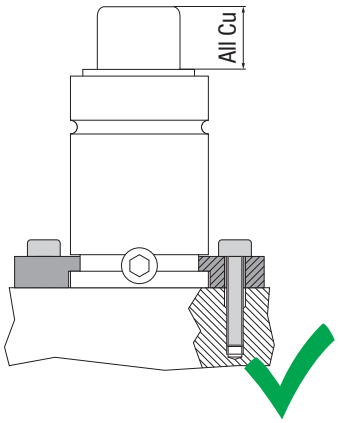

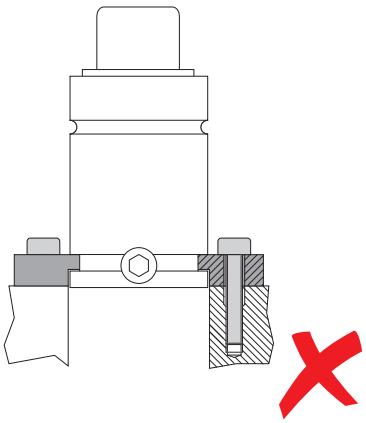

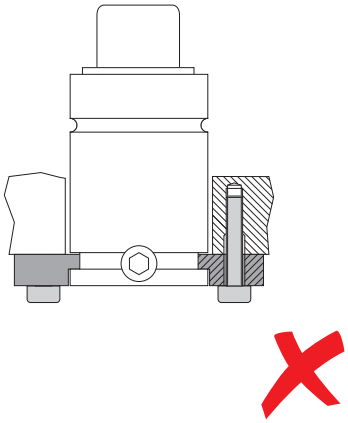

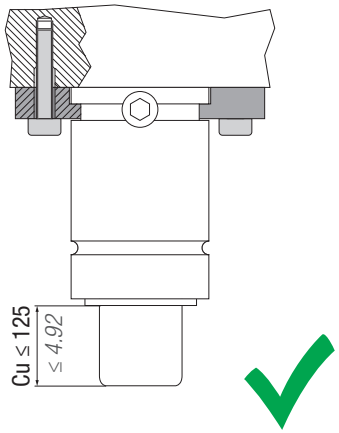

FS1

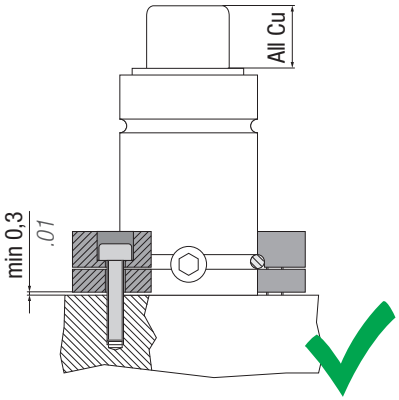

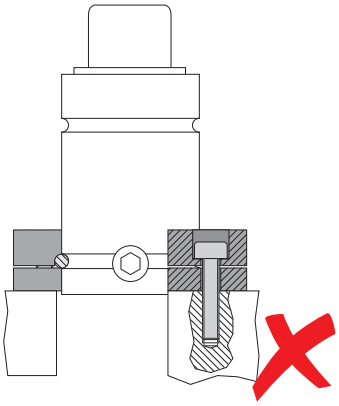

FS3

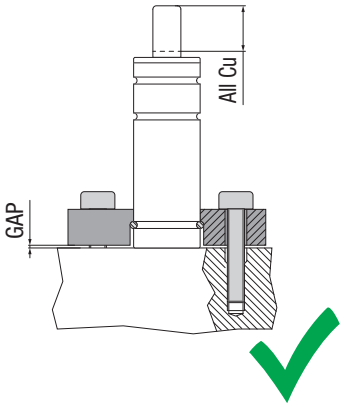

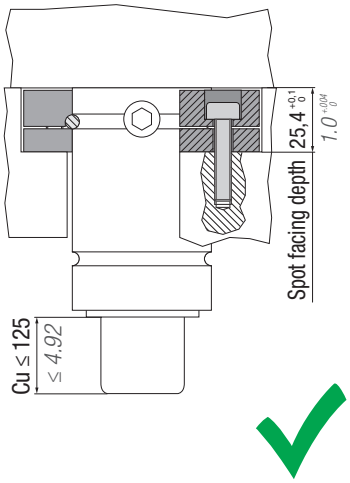

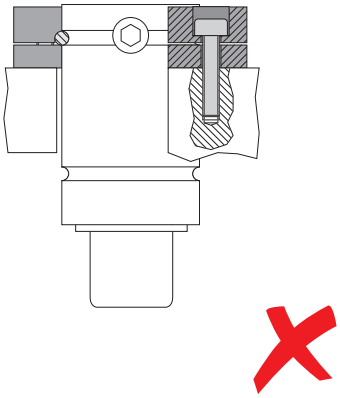

All dimensions in mm / *inch*

INSTALLATION GUIDELINE - BRACKET MOUNT

Esempi di installazione - Installation examples - Montagebeispiele - Exemples d'installation - Ejemplos de instalación - Exemplo de instalação

FC (for body cylinder Ø 12 ÷ 25)

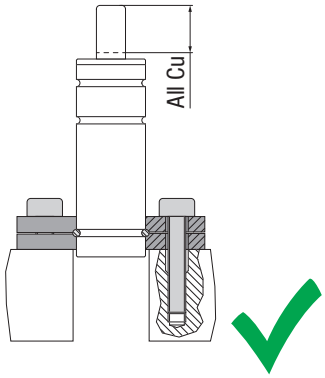

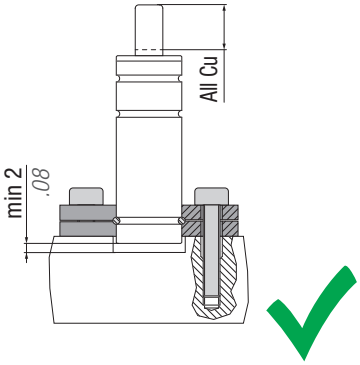

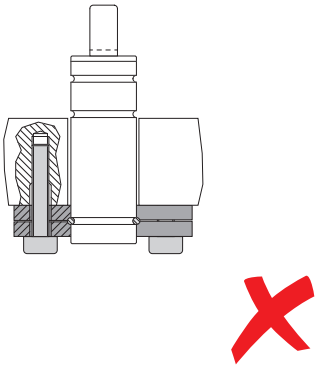

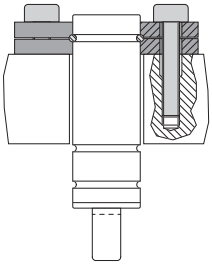

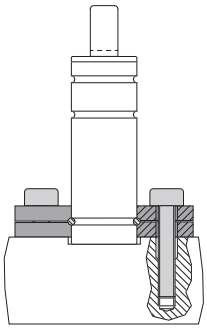

FTP

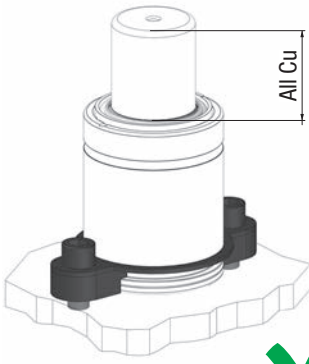

FT

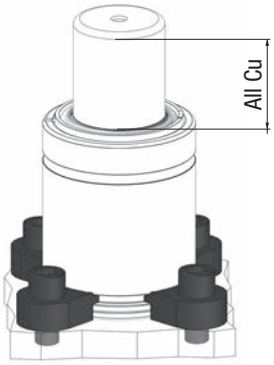

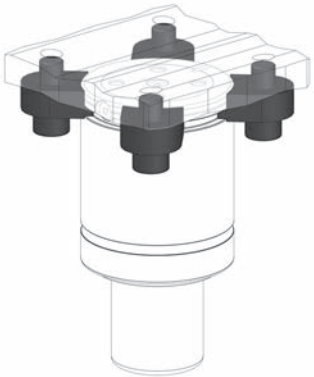

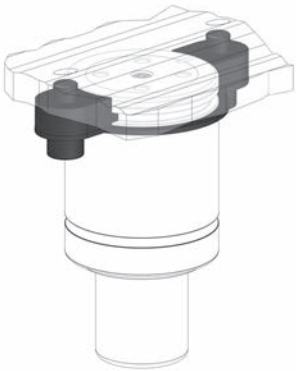

All dimensions in mm / *inch*

INSTALLATION GUIDELINE - BODY MOUNT

Esempi di installazione - Installation examples - Montagebeispiele - Exemples d'installation - Ejemplos de instalación - Exemplo de instalação

FSA - FSB - FSC - FSD - FSE

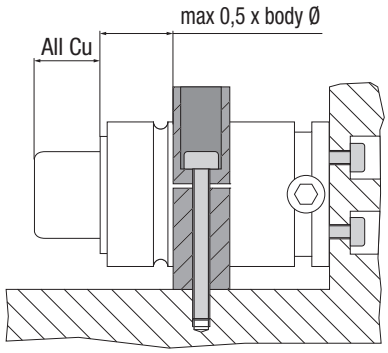

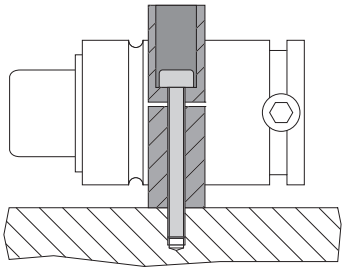

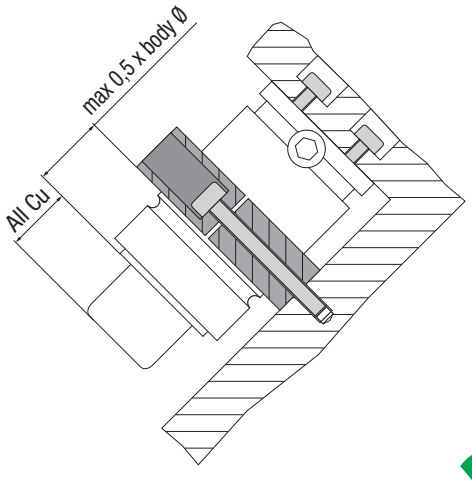

(FSA - FSB - FSC - FSD - FSE) + R

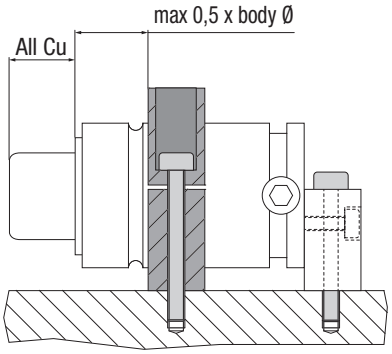

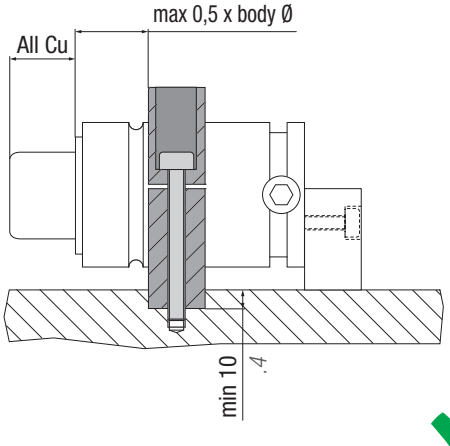

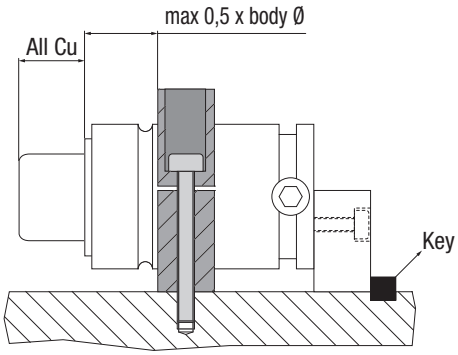

All dimensions in mm / *inch*

INSTALLATION GUIDELINE - THREAD MOUNT

Esempi di installazione - Installation examples - Montagebeispiele - Exemples d'installation - Ejemplos de instalación - Exemplo de instalação

GM

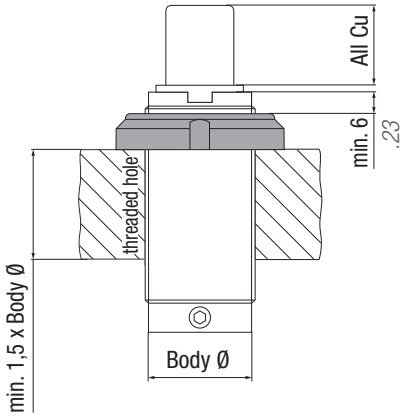

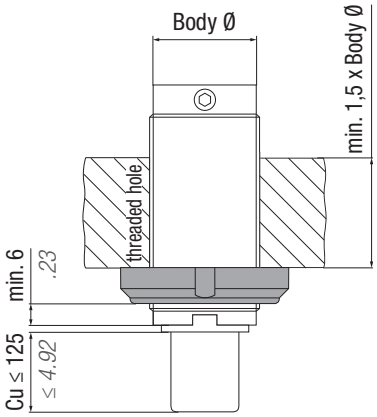

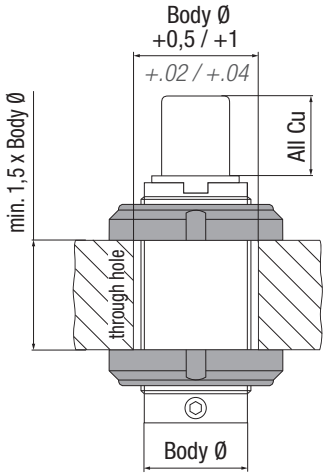

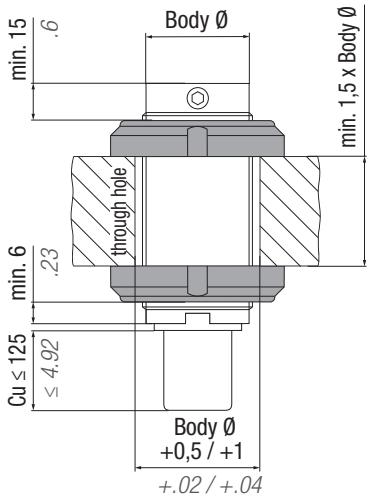

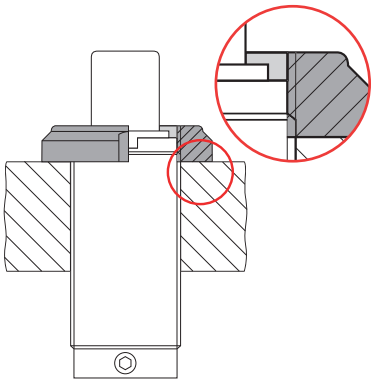

All dimensions in mm / *inch*

INSTALLATION GUIDELINE - THREAD MOUNT

Esempi di installazione - Installation examples - Montagebeispiele - Exemples d'installation - Ejemplos de instalación - Exemplo de instalação

DM - DI

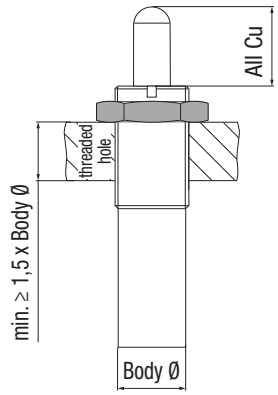

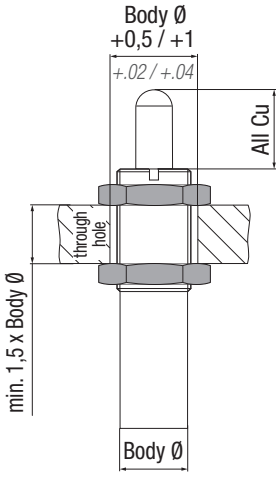

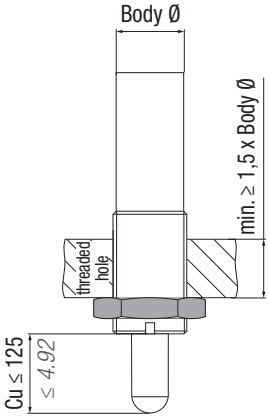

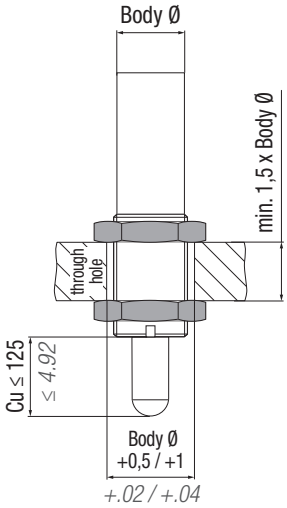

All dimensions in mm / *inch*

INSTALLATION GUIDELINE - THREAD MOUNT

Esempi di installazione - Installation examples - Montagebeispiele - Exemples d'installation - Ejemplos de instalación - Exemplo de instalação

FCA

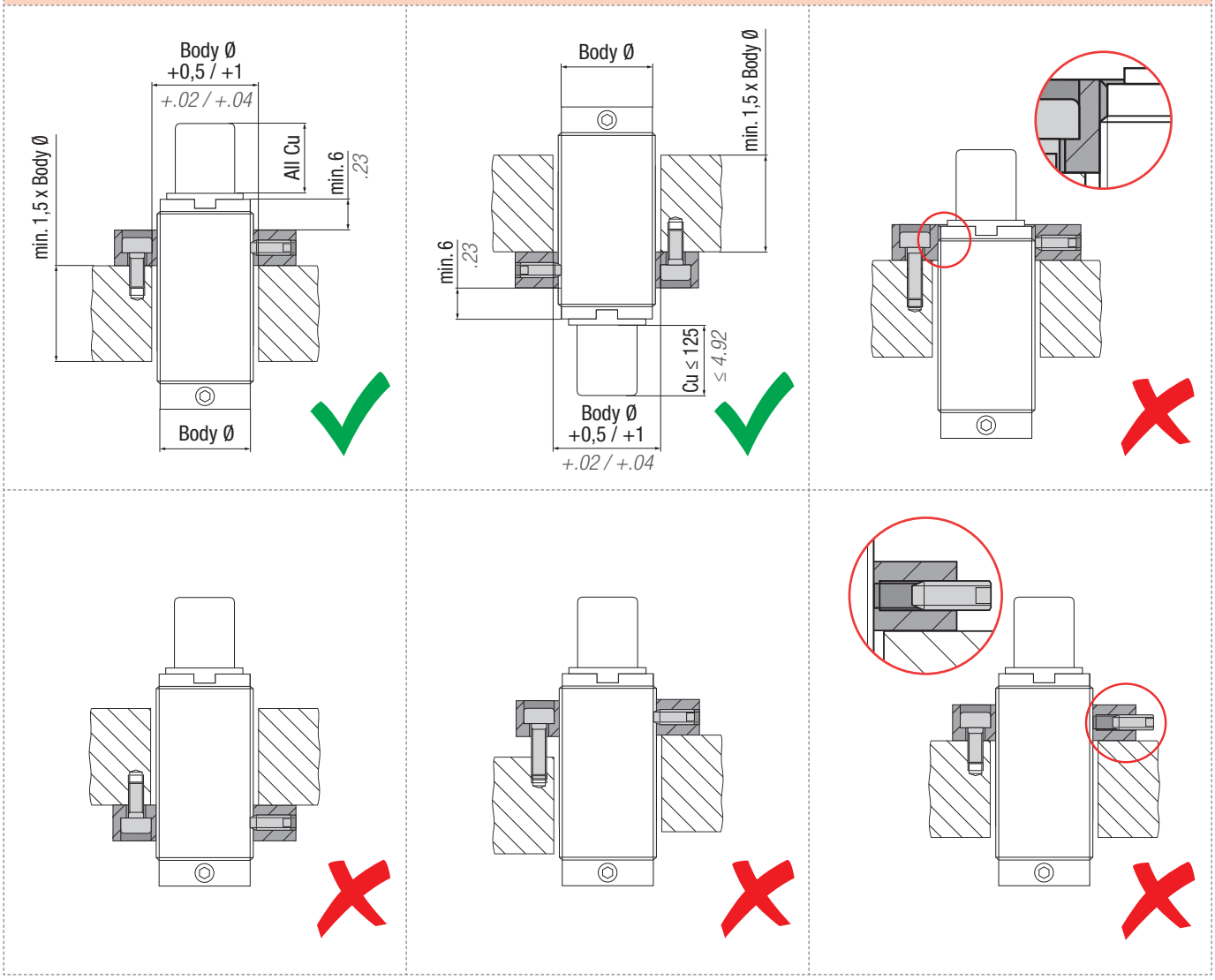

All dimensions in mm / *inch*

INSTALLATION GUIDELINE - ML, MP, MQ series

Esempi di installazione - Installation examples - Montagebeispiele - Exemples d'installation - Ejemplos de instalación - Exemplo de instalação

IT Installare le molle a gas rispettando le indicazioni fornite qui sotto. Informazioni dettagliate sono presenti nel kit dedicato.

EN Install the gas springs following the directions given here below. Detailed information is included in the specific kit.

DE Montieren Sie die Gasdruckfedern gemäß den unten folgenden Anweisungen. Detaillierte Anweisungen finden Sie im jeweiligen Bausatz.

FR Installez les ressorts à gaz en suivant les instructions données ci-dessous. Des informations détaillées sont incluses dans le kit spécifique.

ES Instale los resortes de gas siguiendo las instrucciones dadas a continuación. La información detallada se incluye en el kit específico.

PT Fixar os cilindros respeitando as orientações abaixo. Todas as informações detalhadas estão presentes no manual de instruções de cada cilindro.

ML, MP, MQ series - SELF CONTAINED

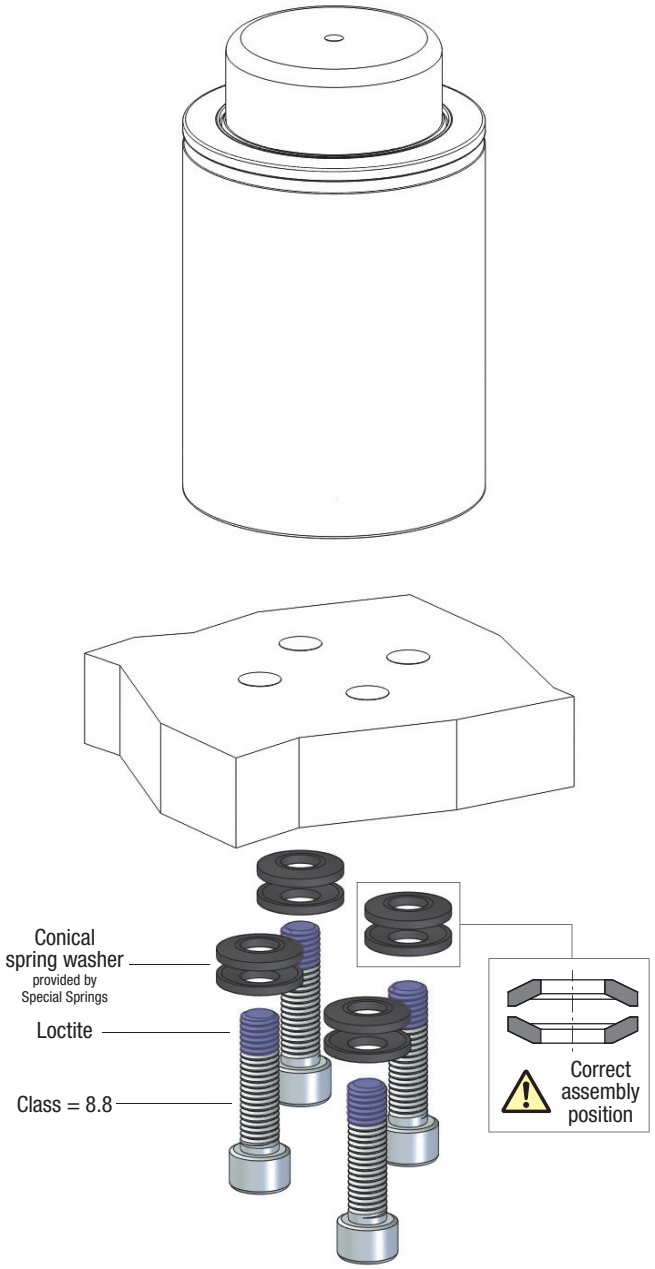

ML - LINKABLE

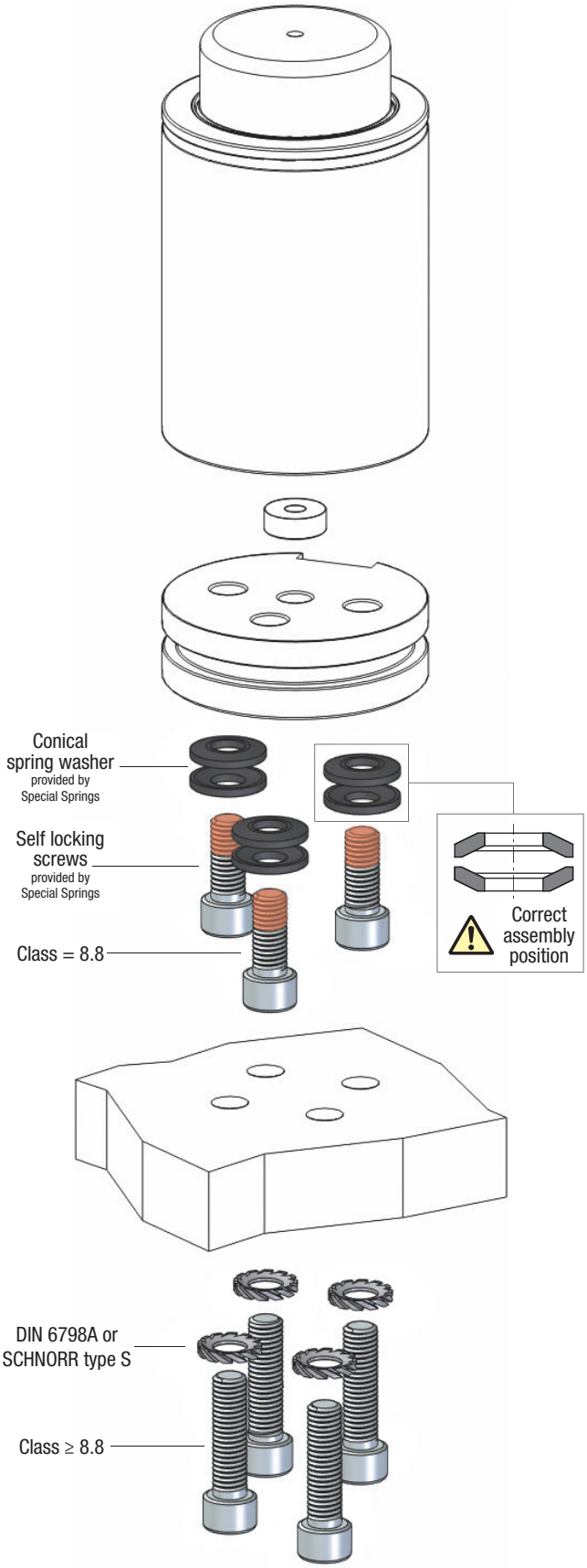

INSTALLATION GUIDELINE - ML, MP, MQ series

Esempi di installazione - Installation examples - Montagebeispiele - Exemples d'installation - Ejemplos de instalación - Exemplo de instalação

ML - EASY MANIFOLD

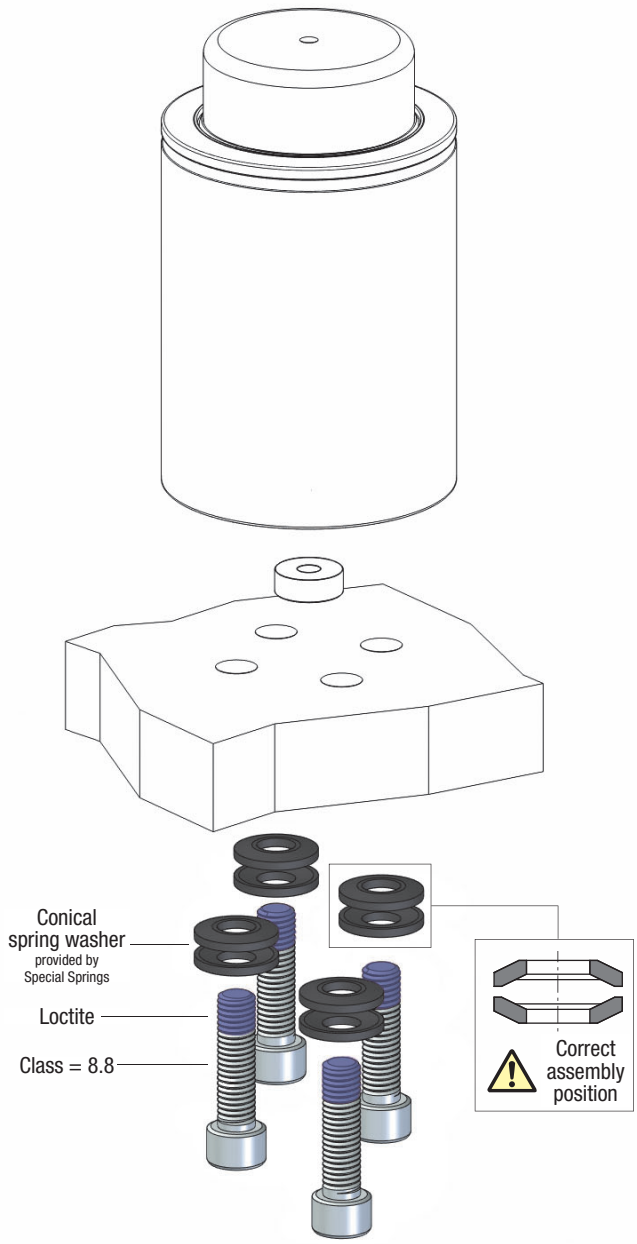

FIXING INFORMATION

IT Si raccomanda di installare le molle a gas nelle versioni "**Self Contained**" e "**Easy Manifold**" rispettando le indicazioni qui sotto.

EN It is recommended to install gas springs in the **"Self-Contained"** and **"Easy Manifold"** versions by following the directions given here below.

DE Es wird empfohlen, die Gasdruckfedern der Versionen **"Self-Contained"** und **"Easy Manifold"** gemäß den unten aufgeführten Anweisungen einzubauen.

FR Il est recommandé d'installer les ressorts à gaz dans les versions **"Self-Contained"** (autonome) et **"Easy Manifold"** en suivant les instructions données ci-dessous.

ES Se recomienda instalar los resortes de gas en las versiones **"Self-Contained"** (autónomo) y **"Easy Manifold"** siguiendo las instrucciones dadas a continuación.

PT Se recomenda fixar os cilindros **autonomos** e os para **"Easy Manifold"**, conforme as instruções abaixo.

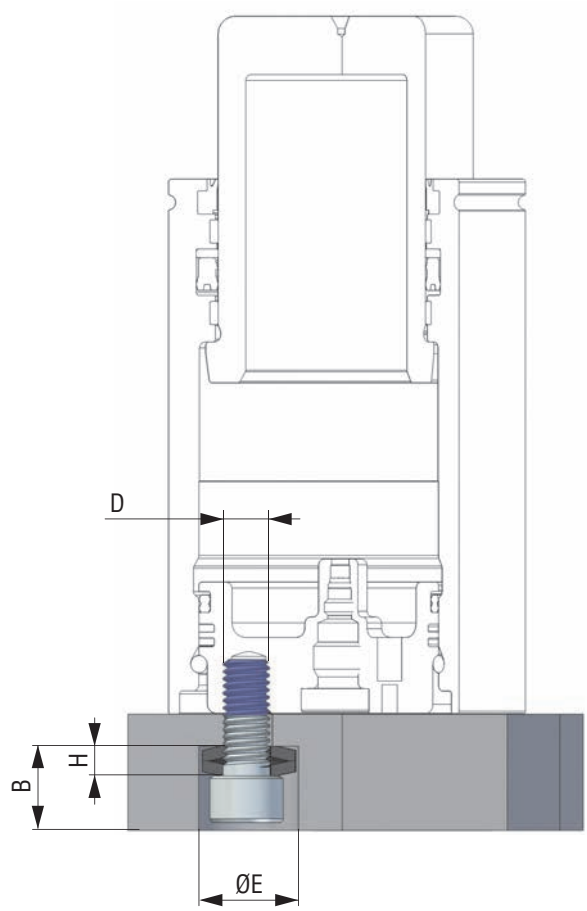

Model	Washer code	Ø E		B		H		D	
		mm	inch	mm	inch	mm	inch		
ML 1000 D	49RC06A	≥ 10,25	≥ .40	≥ 9,15	≥ .36	3,15	.12	M6	UNI EN ISO 21269:2007 class = 8.8
ML 1800 D	49RC06A	≥ 10,25	≥ .40	≥ 9,15	≥ .36	3,15	.12	M6	
ML 3000 D	49RCHS08A	≥ 17,3	≥ .68	≥ 12	≥ .47	4	.16	M8	
ML 4700 D	49RC08A	≥ 18,3	≥ .72	≥ 12	≥ .47	4	.16	M8	
ML 7500 D	49RC08A	≥ 18,3	≥ .72	≥ 12	≥ .47	4	.16	M8	
ML 12000 D	49RC10A	≥ 23,3	≥ .92	≥ 15	≥ .59	5	.20	M10	

FLANGE MOUNTS

IT La seguente tabella indica i riferimenti Special Springs per ogni standards. Vedi esempio sotto riportato.

EN The following table shows the references for each Special Springs standards. See example below.

DE Die folgende Tabelle zeigt die Verweise für jede Special Springs Standards. Siehe Beispiel unten.

FR Le tableau suivant indique les références pour chacune des normes spéciales Springs. Voir l'exemple ci-dessous.

ES La siguiente tabla muestra las referencias de las normas especiales para cada Springs. Consulte el siguiente ejemplo.

PT A tabela a seguir mostra as referências para cada normas especiais molas. Veja o exemplo abaixo.

Reference to standards	Standards	
0	//	Special Springs
1	ISO 11901-2	
2	VDI 3003	
3	B2 4009	BMW
4	W-DX35-62M	Ford
5	W-DX35-80M	Ford
6	W-DX40-80M	Ford
7	90.25.01	General Motors
8	90.25.02	General Motors
9	90.25.03	General Motors
10	90.25.04	General Motors
11	90.25.06	General Motors
12	90.25.07	General Motors
13	90.25.455	General Motors
14	B8 0132 110 008 801	Mercedes Benz

Reference to standards	Standards	
15	B8 0138 100 000 001	Mercedes Benz
16	B8 0134 300 000 001	Mercedes Benz
17	B8 0134 400 008 801	Mercedes Benz
18	B8	Mercedes Benz
19	E24.54.815.G	Peugeot - Citroën
20	EM24.54.700	Renault
21	39D 848	Volkswagen
22	075.90.70	FCA
23	075.90.75	FCA
24	075.90.80	FCA
25	075.90.85	FCA
26	075.90.90	FCA
27	075.90.95	FCA
28	075.90.40	FCA
29	K32D2-2400-50	Nissan

How to read the table

CODE	Reference to standards	A		B		Ø C		D		Ø E		Ø F		Ø G		Ø H		I		L	
		mm	*inch*	mm	*inch*	mm	*inch*	mm	*inch*	mm	*inch*	mm	*inch*	mm	*inch*	mm	*inch*	mm	*inch*	mm	*inch*
FB 45	1-2-10-19-20	70	*2.76*	50	*1.97*	20	*0.79*	20	*0.79*	15	*0.59*	15	*0.59*	9	*0.35*	9	*0.35*	14	*0.55*	12	*0.47*

Dimension

Special Springs CODE

1 = ISO 11901-2
2 = VDI 3003
10 = 90.25.04
19 = E24.54.815.G
20 = EM24.54.700

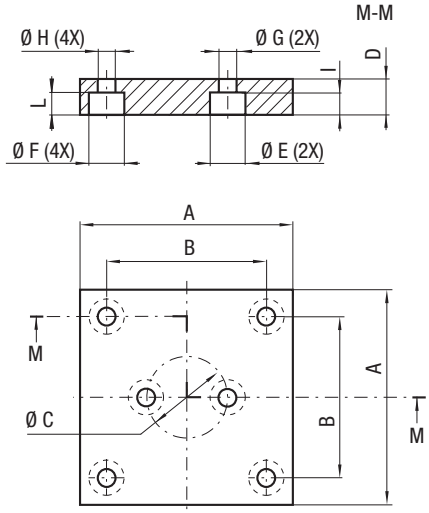

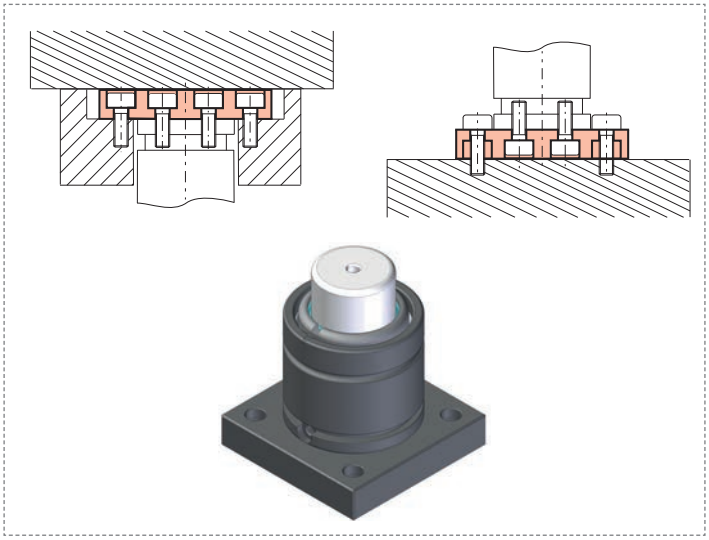

CODE	Reference to standards	A		B		Ø C		D		Ø E		Ø F		Ø G		Ø H		I		L	
		mm	inch	mm	inch	mm	inch	mm	inch	mm	inch	mm	inch	mm	inch	mm	inch	mm	inch	mm	inch
FB 45	1-2-10-19-20	70	2.76	50	1.97	20	0.79	20	0.79	15	0.59	15	0.59	9	0.35	9	0.35	14	0.55	12	0.47
FB 50	1-2-10-19-20	75	2.95	56,5	2.22	20	0.79	20	0.79	15	0.59	15	0.59	9	0.35	9	0.35	14	0.55	12	0.47
FB 63	0	100	3.94	73,5	2.89	20	0.79	20	0.79	15	0.59	18	0.71	9	0.35	11	0.43	12	0.47	12	0.47

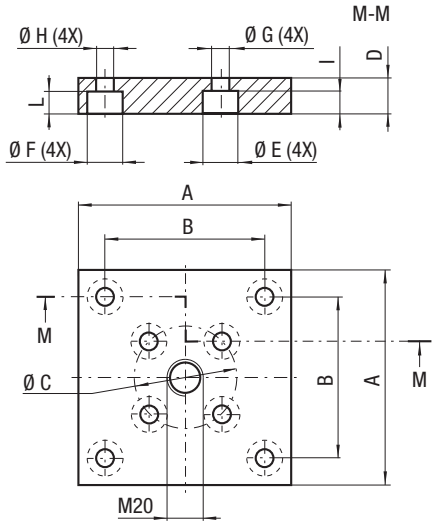

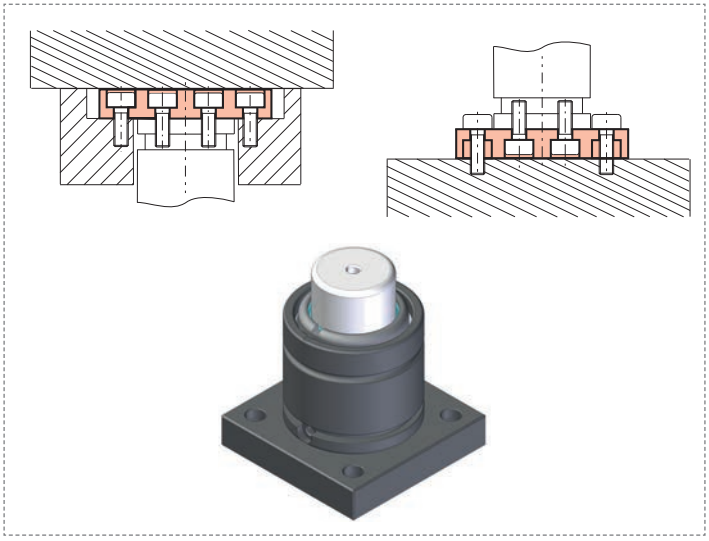

CODE	Reference to standards	A		B		Ø C		D		Ø E		Ø F		Ø G		Ø H		I		L	
		mm	inch	mm	inch	mm	inch	mm	inch	mm	inch	mm	inch	mm	inch	mm	inch	mm	inch	mm	inch
FB 75	1-2-10-19-20	100	3.94	73,5	2.89	40	1.57	20	0.79	15	0.59	18	0.71	9	0.35	11	0.43	14	0.55	12	0.47
FB 95	1-2-10-19-20	120	4.72	92	3.62	60	2.36	20	0.79	15	0.59	20	0.79	9	0.35	13,5	0.53	14	0.55	13	0.51
FB 120	1-2-10-19-20	140	5.51	109,5	4.31	80	3.15	20	0.79	18	0.71	20	0.79	11	0.43	13,5	0.53	15	0.59	13	0.51
FB 150	1-2-10-20	190	7.48	138	5.43	100	3.94	25	0.98	18	0.71	26	1.02	11	0.43	17,5	0.69	15	0.59	17	0.67
FB 195	1-2-10-20	210	8.27	170	6.69	120	4.72	25	0.98	20	0.79	26	1.02	13,5	0.53	17,5	0.69	13	0.51	17	0.67

Renault			

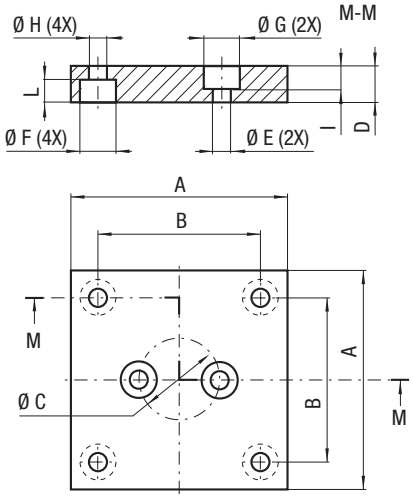

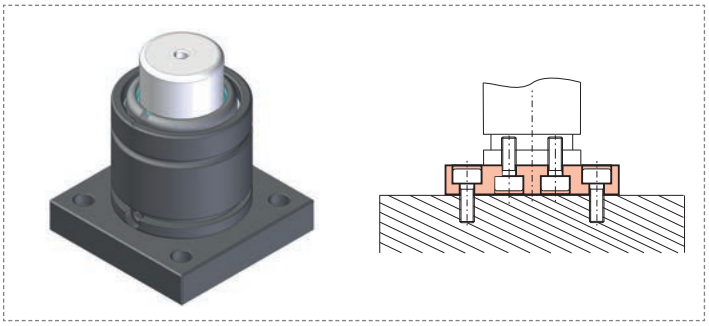

CODE	Reference to standards	A		B		Ø C		D		Ø E		Ø F		Ø G		Ø H		I		L	
		mm	inch	mm	inch	mm	inch	mm	inch	mm	inch	mm	inch	mm	inch	mm	inch	mm	inch	mm	inch
FBA 45	20	70	2.76	50	1.97	20	0.79	20	0.79	9	0.35	18	0.71	15	0.59	11	0.43	14	0.55	12	0.47
FBA 50	20	75	2.95	56,5	2.22	20	0.79	20	0.79	9	0.35	18	0.71	15	0.59	11	0.43	14	0.55	12	0.47

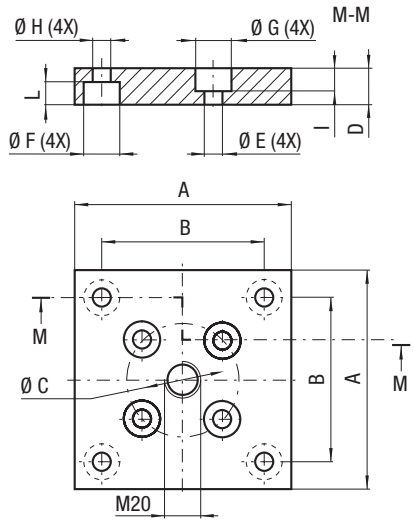

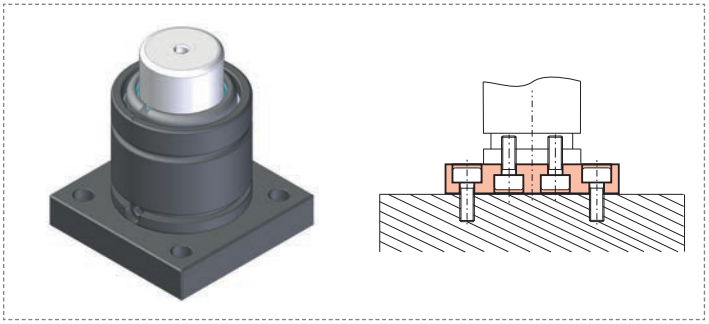

CODE	Reference to standards	A		B		Ø C		D		Ø E		Ø F		Ø G		Ø H		I		L	
		mm	inch	mm	inch	mm	inch	mm	inch	mm	inch	mm	inch	mm	inch	mm	inch	mm	inch	mm	inch
FBA 75	20	100	3.94	73,5	2.89	40	1.57	20	0.79	9	0.35	18	0.71	15	0.59	11	0.43	14	0.55	12	0.47
FBA 95	20	120	4.72	92	3.62	60	1.57	20	0.79	9	0.35	20	0.79	15	0.59	13,5	0.53	14	0.55	13	0.51
FBA 120	20	140	5.51	109,5	4.31	80	3.15	20	0.79	11	0.43	20	0.79	18	0.71	13,5	0.53	15	0.59	13	0.51
FBA 150	20	190	7.48	138	5.43	100	3.94	25	0.98	11	0.43	26	1.02	18	0.71	17,5	0.69	15	0.59	17	0.67
FBA 195	20	210	8.27	170	6.69	120	4.72	25	0.98	13,5	0.53	26	1.02	20	0.79	17,5	0.69	15	0.59	17	0.67

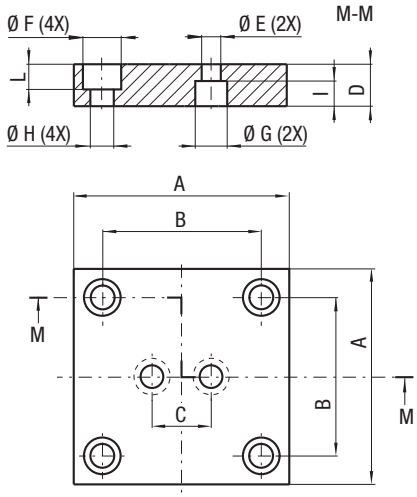

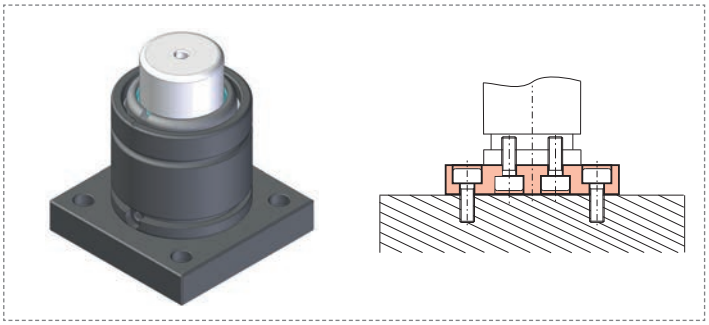

CODE	Reference to standards	A		B		C		D		Ø E		Ø F		Ø G		Ø H		I		L	
		mm	inch	mm	inch	mm	inch	mm	inch	mm	inch	mm	inch	mm	inch	mm	inch	mm	inch	mm	inch
FBB 45	3-14	70	2.76	50	1.97	20	0.79	20	0.79	9	0.35	15	0.59	15	0.59	9	0.35	12	0.47	12	0.47
FBB 50	3-14	75	2.95	56,5	2.22	20	0.79	20	0.79	9	0.35	15	0.59	15	0.59	9	0.35	12	0.47	12	0.47
FBB 63	3-14	100	3.94	73,5	2.89	20	0.79	20	0.79	9	0.35	18	0.71	15	0.59	11	0.43	12	0.47	12	0.47

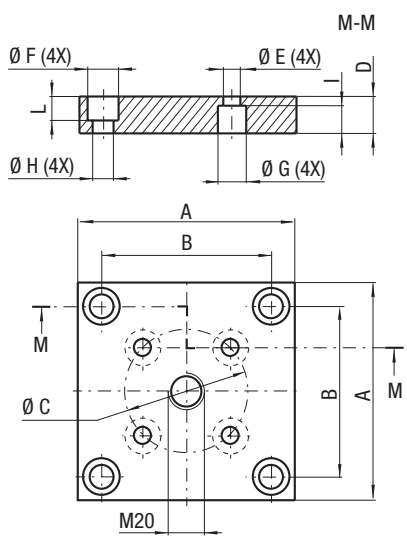

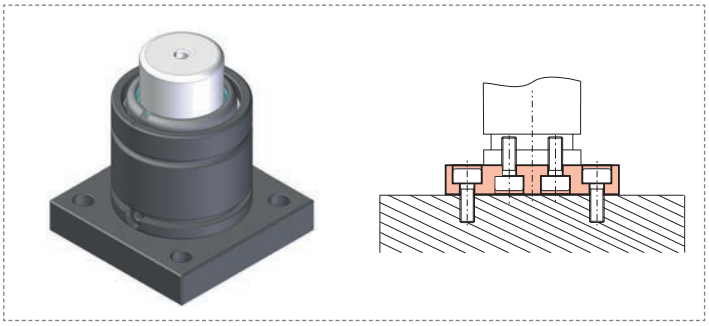

CODE	Reference to standards	A		B		Ø C		D		Ø E		Ø F		Ø G		Ø H		I		L	
		mm	inch	mm	inch	mm	inch	mm	inch	mm	inch	mm	inch	mm	inch	mm	inch	mm	inch	mm	inch
FBB 75	3-14	100	3.94	73,5	2.89	40	1.57	20	0.79	9	0.35	18	0.71	15	0.59	1 1	0.43	12	0.47	14	0.55
FBB 95	3-14	120	4.72	92	3.62	60	2.36	20	0.79	9	0.35	20	0.79	15	0.59	13,5	0.53	14	0.55	13	0.51
FBB 120	3-14	140	5.51	109,5	4.31	80	3.15	20	0.79	11	0.43	20	0.79	18	0.71	13,5	0.53	15	0.59	13	0.51
FBB 150 A	3-14	190	7.48	138	5.43	100	3.94	20	0.79	11	0.43	20	0.79	18	0.71	13,5	0.53	15	0.59	13	0.51
FBB 195	14	210	8.27	170	6.69	120	4.72	25	0.98	13,5	0.53	26	1.02	20	0.98	17,5	0.69	15	0.59	17	0.67

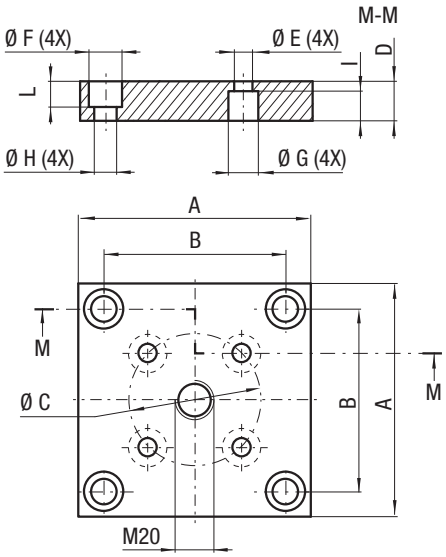

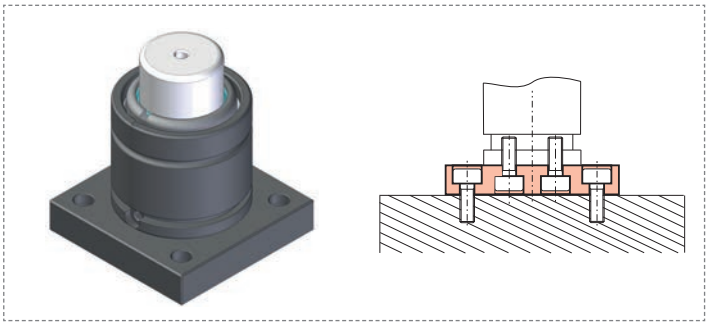

CODE	Reference to standards	A		B		Ø C		D		Ø E		Ø F		Ø G		Ø H		I		L	
		mm	*inch*	mm	*inch*	mm	*inch*	mm	*inch*	mm	*inch*	mm	*inch*	mm	*inch*	mm	*inch*	mm	*inch*	mm	*inch*
FBC 75	0	100	*3.94*	73,5	*2.89*	40	*1.57*	20	*0.79*	9	*0.35*	18	*0.71*	15	*0.59*	11	*0.43*	12	*0.47*	15	*0.55*

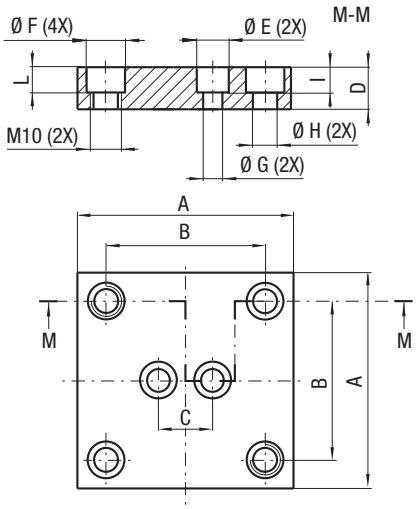

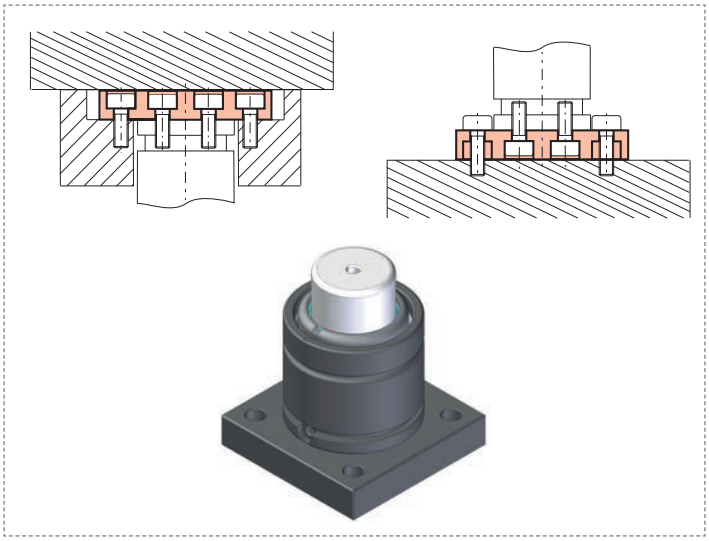

CODE	Reference to standards	A		B		C		D		Ø E		Ø F		Ø G		Ø H		I		L	
		mm	inch	mm	inch	mm	inch	mm	inch	mm	inch	mm	inch	mm	inch	mm	inch	mm	inch	mm	inch
FBD 45	3	70	2.76	50	1.97	20	0.79	20	0.79	15	0.59	15	0.59	9	0.35	9	0.35	12	0.47	12	0.47
FBD 50	3	75	2.95	56,5	2.22	20	0.79	20	0.79	15	0.59	15	0.59	9	0.35	9	0.35	12	0.47	12	0.47

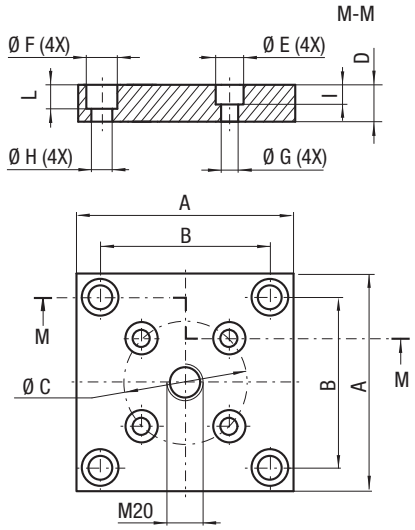

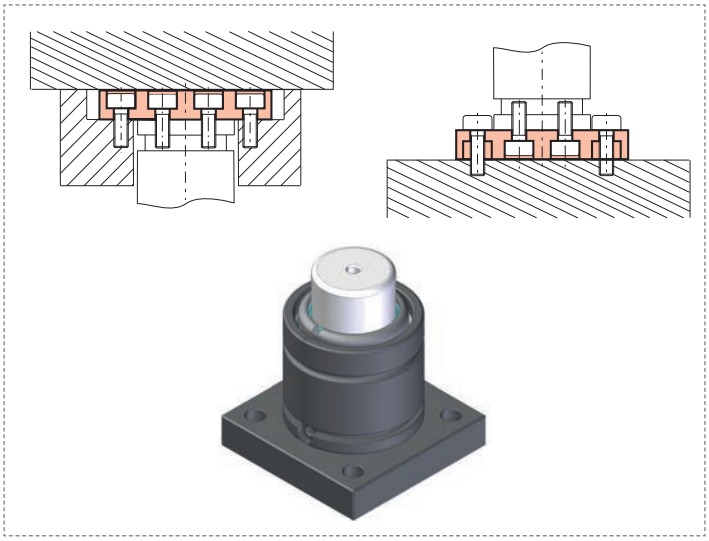

CODE	Reference to standards	A		B		Ø C		D		Ø E		Ø F		Ø G		Ø H		I		L	
		mm	inch	mm	inch	mm	inch	mm	inch	mm	inch	mm	inch	mm	inch	mm	inch	mm	inch	mm	inch
FBD 75	3	100	3.94	73,5	2.89	40	1.57	20	0.79	15	0.59	18	0.71	9	0.35	11	0.43	12	0.47	15	0.59
FBD 150	3-8	190	7.48	138	5.43	100	3.94	20	0.79	18	0.71	26	1.02	11	0.43	17,5	0.69	15	0.59	17	0.67

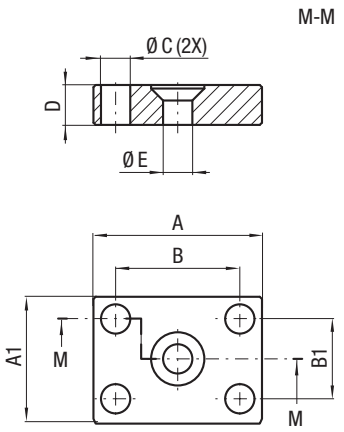

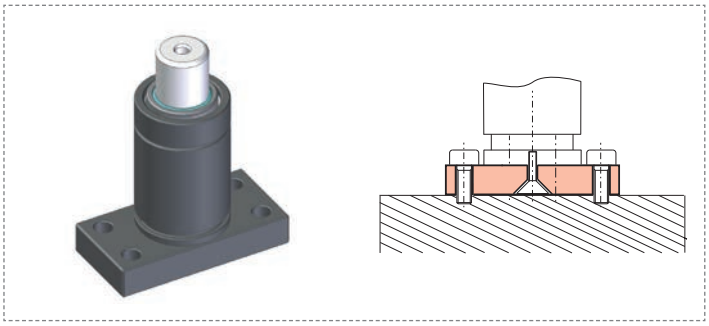

CODE	Reference to standards	A		A1		B		B1		Ø C		D		Ø E	
		mm	inch	mm	inch	mm	inch	mm	inch	mm	inch	mm	inch	mm	inch
FBE 19	0	38	1.50	28	1.10	28	1.10	18	0.71	6,6	0.26	9	0.35	6,6	0.26
FBE 25	0	44	1.73	28	1.10	34	1.34	18	0.71	6,6	0.26	9	0.35	6,6	0.26

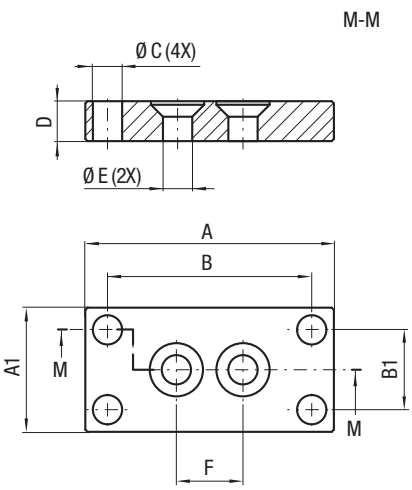

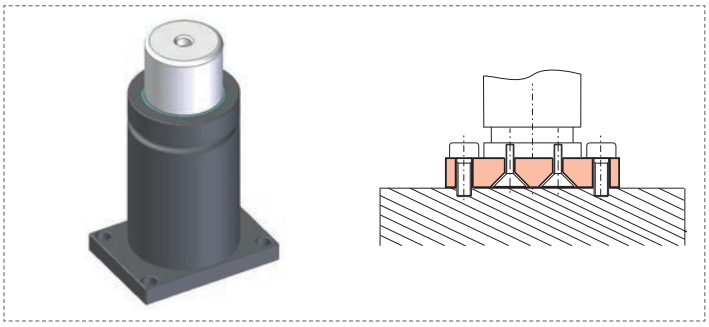

CODE	Reference to standards	A		A1		B		B1		Ø C		D		Ø E		F	
		mm	inch	mm	inch	mm	inch	mm	inch	mm	inch	mm	inch	mm	inch	mm	inch
FBE 32	0	51	2.01	32	1.26	41	1.61	22	0.87	6.6	0.26	9	0.35	6,6	0.26	15	0.59
FBE 38	0	57	2.24	38	1.50	47	1.85	28	1.10	6.6	0.26	9	0.35	6,6	0.26	20	0.79
FBE 50	0	69	2.72	50	1.97	59	2.32	40	1.57	6.6	0.26	9	0.35	9	0.35	20	0.79
FBE 63	0	84	3.31	65	2.56	70	2.76	50	1.97	6.6	0.26	9	0.35	9	0.35	20	0.79

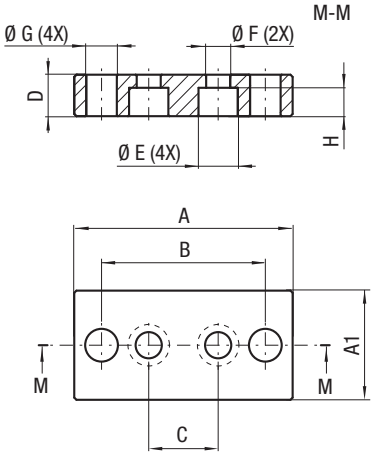

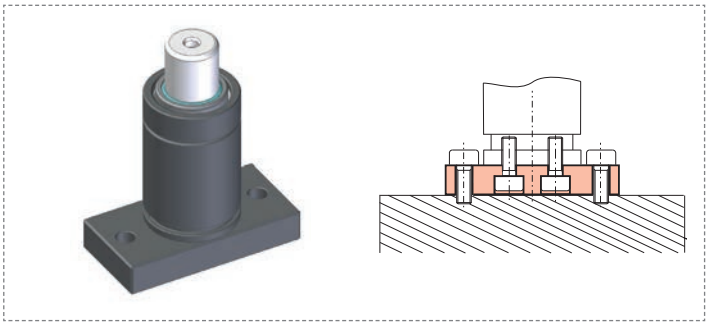

CODE	Reference to standards	A		A1		B		C		D		Ø E		Ø F		Ø G		H	
		mm	inch	mm	inch	mm	inch	mm	inch	mm	inch	mm	inch	mm	inch	mm	inch	mm	inch
FBF 45	20-29	90	3.54	45	1.77	70	2.76	20	0.79	16	0.63	14	0.55	9	0.35	9	0.35	10	0.39
FBF 50	20-29	100	3.94	50	1.97	75	2.95	31,8	1.25	19	0.75	18	0.71	11	0.43	14	0.55	13	0.51
FBFA 50	20-29	100	3.94	50	1.97	75	2.95	20	0.79	19	0.75	14	0.55	9	0.35	14	0.55	13	0.51

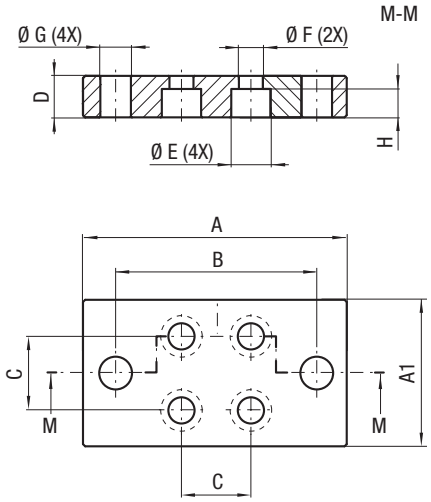

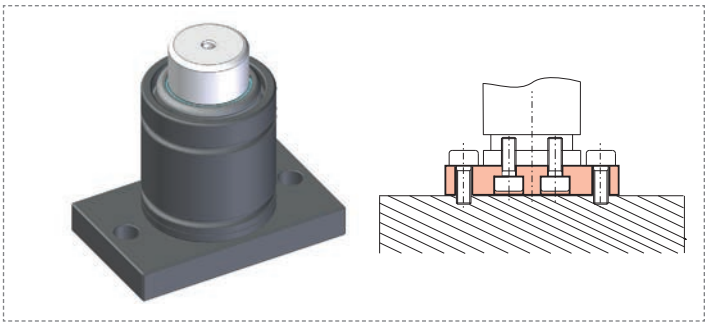

CODE	Reference to standards	A		A1		B		C		D		Ø E		Ø F		Ø G		H	
		mm	inch	mm	inch	mm	inch	mm	inch	mm	inch	mm	inch	mm	inch	mm	inch	mm	inch
FBF 75	20-29	130	5.12	80	3.15	105	4.13	38,1	1.50	19	0.75	20	0.79	14	0.55	14	0.55	13	0.51
FBFA 75	20-29	130	5.12	80	3.15	105	4.13	28,3	1,11	19	0.75	14	0.55	9	0.35	14	0.55	13	0.51
FBF 95	20-29	150	5.91	100	3.94	125	4.92	53,9	2,12	19	0.75	20	0.79	14	0.55	14	0.55	13	0.51
FBFA 95	20-29	150	5.91	100	3.94	125	4.92	42,4	1,67	19	0.75	14	0.55	9	0.35	14	0.55	13	0.51
FBF 120	20-29	170	6.69	120	4.72	145	5.71	57,1	2,25	19	0.75	20	0.79	14	0.55	14	0.55	13	0.51

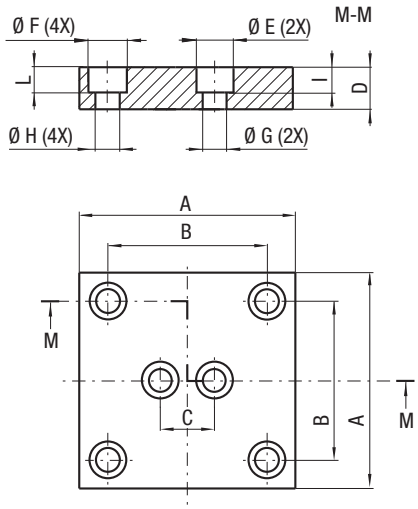

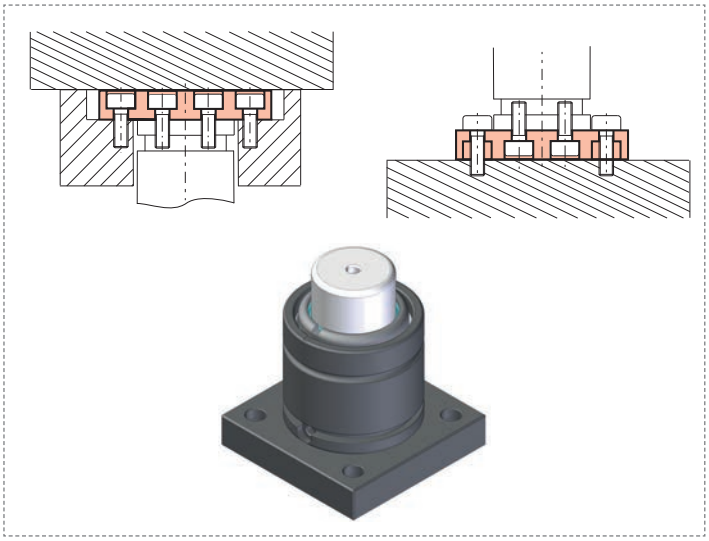

CODE	Reference to standards	A		B		C		D		Ø E		Ø F		Ø G		Ø H		I		L	
		mm	inch	mm	inch	mm	inch	mm	inch	mm	inch	mm	inch	mm	inch	mm	inch	mm	inch	mm	inch
FBH 50	19	85	3.35	62	2.44	31,8	1.25	25	0.98	18	0.71	18	0.71	11	0.43	11	0.43	13	0.51	13	0.51

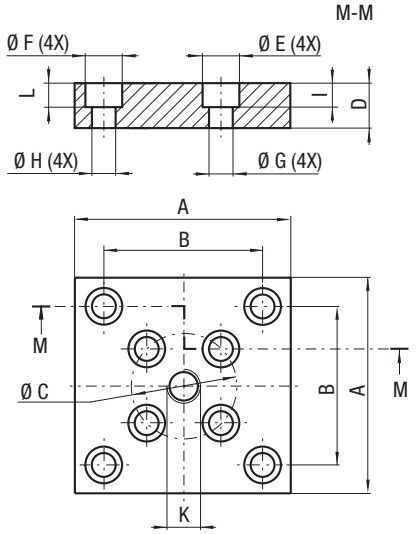

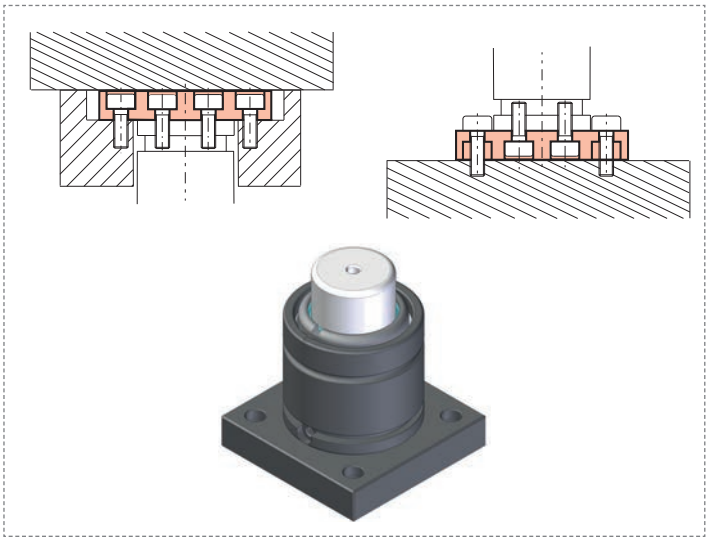

CODE	Reference to standards	A		B		Ø C		D		Ø E		Ø F		Ø G		Ø H		I		L		K
		mm	inch	mm	inch	mm	inch	mm	inch	mm	inch	mm	inch	mm	inch	mm	inch	mm	inch	mm	inch	
FBH 75	19	100	3.94	76	2.99	53,9	2.12	25	0.98	21	0.83	21	0.83	13	0.51	13	0.51	14	0.55	13	0.51	M16
FBH 95	19	132	5.20	95	3.74	76,2	3.00	30	1.18	20	0.79	26	1.02	13	0.51	17	0.67	14	0.55	18	0.71	M20

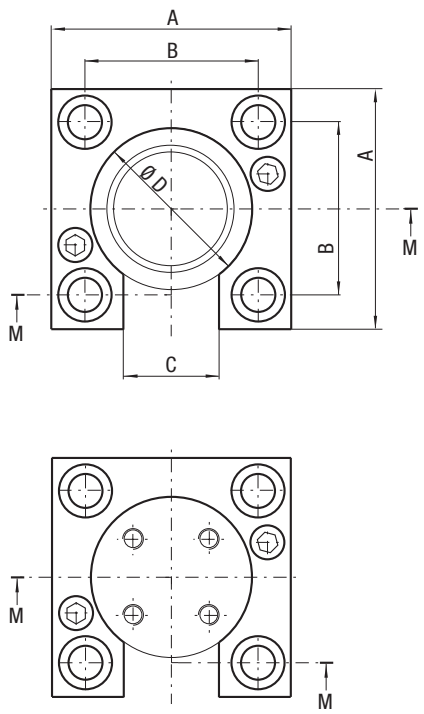

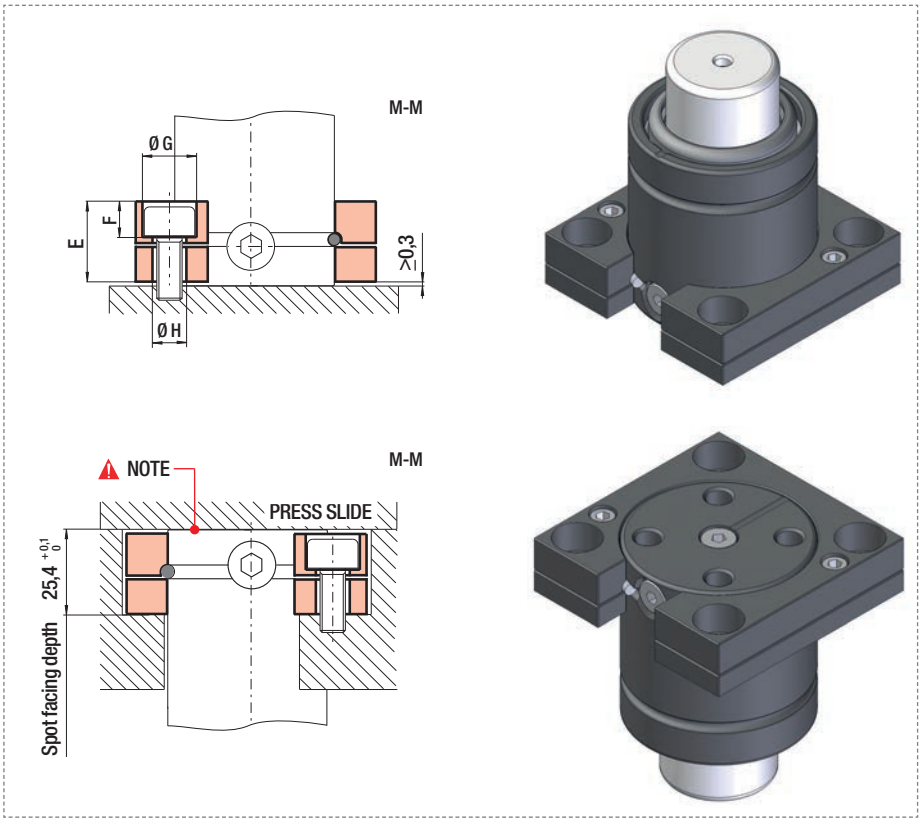

CODE	Reference to standards	A		B		C		Ø D		E		F		ØG		ØH	
		mm	*inch*	mm	*inch*	mm	*inch*	mm	*inch*	mm	*inch*	mm	*inch*	mm	*inch*	mm	*inch*
FS1 50	0	75	*2.95*	53,9	*2.12*	30	*1.18*	50,5	*1.99*	25	*0.98*	11	*0.43*	17	*0.67*	11	*0.43*
FS1 63	0	100	*3.94*	73,5	*2.89*	30	*1.18*	63,5	*2.50*	25	*0.98*	11	*0.43*	17	*0.67*	11	*0.43*
FS1 75	0	100	*3.94*	76,2	*3,00*	30	*1.18*	75,5	*2.97*	25	*0.98*	13	*0.51*	20	*0.79*	13	*0.51*
FS1 95	0	125	*4.92*	98,3	*3.87*	30	*1.18*	95,5	*3.76*	25	*0.98*	13	*0.51*	20	*0.79*	13	*0.51*
FS1 120	0	140	*5.51*	114,3	*4.50*	30	*1.18*	120,5	*4.74*	25	*0.98*	13	*0.51*	20	*0.79*	13	*0.51*
FS1 150	0	175	*6.89*	139,7	*5.50*	30	*1.18*	150,5	*5.93*	25	*0.98*	17	*0.67*	25	*0.98*	17	*0.67*

NOTE

IT Garantire sempre il contatto tra il piano premente e il fondo del cilindro.

EN Make sure there is always a contact between the bottom cylinder surface and the press slide.

DE Es muss immer ein Kontakt zwischen der Arbeitsfläche der Presse und dem Boden der Gasdruckfeder gewährleistet sein.

FR Toujours consentir un contact entre la surface du fond du cylindre et la presse.

ES Garantizar siempre un contacto entre la base del cilindro y la corredera del troquel.

PT Garantir sempre o contacto entre o fundo do cilindro e o dispositivo de pressão.

FS2

ISO	VDI	BMW	Ford
General Motors	Mercedes Benz	Volkswagen	

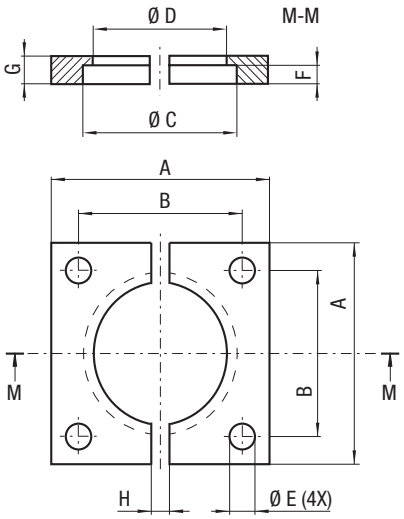

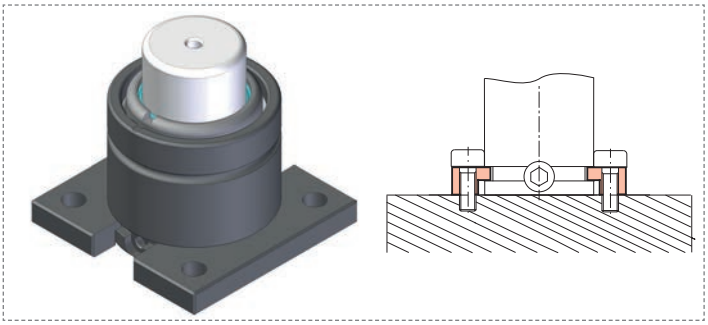

CODE	Reference to standards	A		B		Ø C		Ø D		Ø E		F		G		H	
		mm	inch	mm	inch	mm	inch	mm	inch	mm	inch	mm	inch	mm	inch	mm	inch
FS2 32	1-3-4-7-15	50	1.97	35	1.38	32,5	1.28	28,5	1.12	6,6	0.26	4	0.16	7	0.28	5	0.20
FS2 38	1-3-4-7-15	55	2.17	40	1.57	38,5	1.52	34,5	1.36	7	0.28	4	0.16	7	0.28	5	0.20
FS2 45	1-2-3-4-7-15-21-26	70	2.76	50	1.97	45,5	1.79	41,5	1.63	9	0.35	4	0.16	7	0.28	20	0.79
FS2 50	1-2-3-4-7-15-21-26	75	2.95	56,5	2.22	50,5	1.99	44,5	1.75	9	0.35	8	0.31	12	0.47	24	0.95
FS2 63	0	85	3.35	63,5	2.50	63,5	2.50	57,5	2.26	11	0.43	8	0.31	12	0.47	24	0.95
FS2 75	1-2-3-4-7-15-21-26	100	3.94	73,5	2.89	75,5	2.97	68,5	2.70	11	0.43	8	0.31	12	0.47	24	0.95
FS2 95	1-2-3-4-7-15-21-26	120	4.72	92	3.62	95,5	3.76	88,5	3.48	13,5	0.53	8	0.31	12	0.47	24	0.95
FS2 120	1-2-3-4-7-15-21-26	140	5.51	109,5	4.31	120,5	4.74	113,5	4.47	13,5	0.53	8	0.31	12	0.47	24	0.95
FS2 150	1-2-3-4-7-15-21-26	190	7.48	138	5.43	150,5	5.93	143,5	5.65	17,5	0.69	8	0.31	12	0.47	24	0.95
FS2 195	1-2-4-7-15-21-26	210	8.27	170	6.69	195,5	7.70	188	7.40	17,5	0.69	8	0.31	13	0.51	24	0.95

FS2B

VDI	BMW	Ford	Mercedes Benz
Volkswagen			

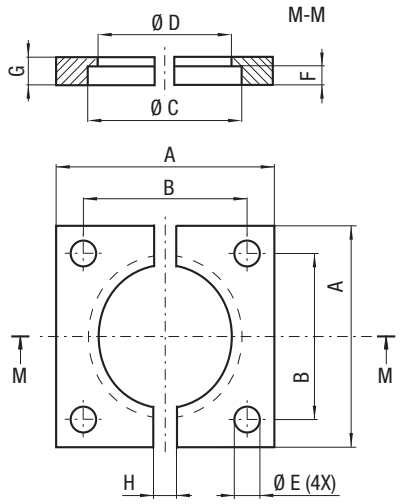

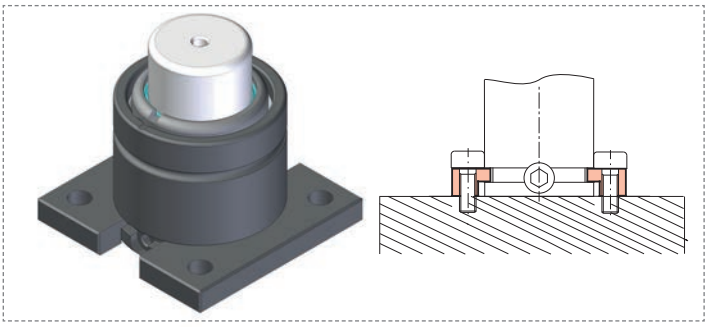

CODE	Reference to standards	A		B		Ø C		Ø D		Ø E		F		G		H	
		mm	inch	mm	inch	mm	inch	mm	inch	mm	inch	mm	inch	mm	inch	mm	inch
FS2B 32	2-21-26	50	1.97	35	1.38	32,5	1.28	28,5	1.12	6,6	0.26	4	0.16	7	0.28	12	0.47
FS2B 38	2-21-26	55	2.17	40	1.57	38,5	1.52	34,5	1.36	6,6	0.26	4	0.16	7	0.28	12	0.47
FS2B 63	2-3-4-15-21	100	3.94	73,5	2.89	64	2.52	57,5	2.60	11	0.43	8	0.32	12	0.47	24	0.95

FS2A

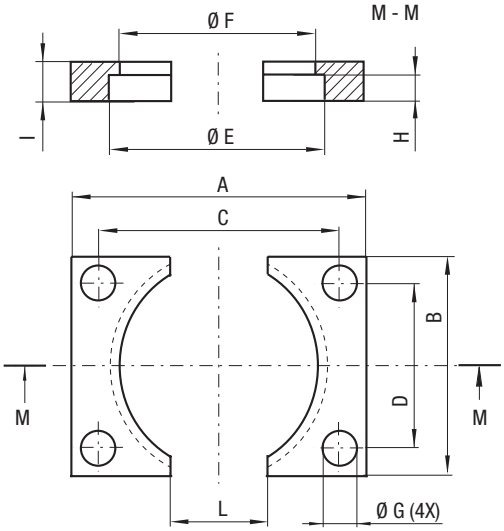

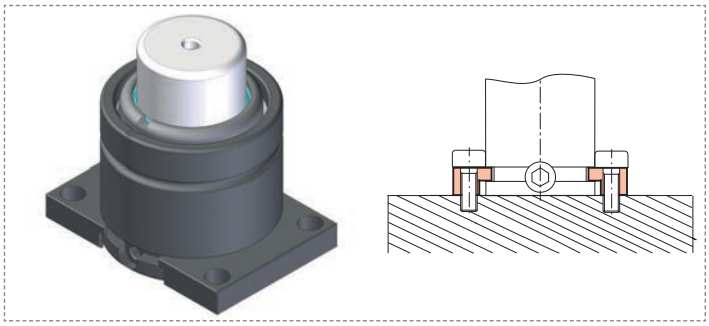

CODE	Reference to standards	A		B		C		D		Ø E		Ø F		Ø G		H		I		L	
		mm	inch	mm	inch	mm	inch	mm	inch	mm	inch	mm	inch	mm	inch	mm	inch	mm	inch	mm	inch
FS2A 32	0	50	1.97	27	1.06	40	1.57	18	0.71	32,5	1.28	28,5	1.12	6,6	0.26	4	0.16	7	0.28	20	0.79
FS2A 38	0	55	2.17	33	1.30	44	1.73	20	0.79	38,5	1.52	34,5	1.36	6,6	0.26	4	0.16	7	0.28	20	0.79
FS2A 45	0	70	2.76	40	1.57	57	2.24	27	1.06	45,5	1.79	41,5	1.63	9	0.35	4	0.16	7	0.28	25	0.98
FS2A 50	0	75	2.95	45	1.77	62	2.44	32	1.26	50,5	1.99	44,5	1.75	9	0.35	8	0.31	12	0.47	25	0.98
FS2A 63	0	85	3.35	58	2.28	69	2.72	42	1.65	63,5	2.5	57,5	2.26	11	0.43	8	0.31	12	0.47	30	1.18
FS2A 75	0	100	3.94	70	2.76	84	3.31	54	2.13	75,5	2.97	68,5	2.7	11	0.43	8	0.31	12	0.47	30	1.18
FS2A 95	0	120	4.72	90	3.54	100	3.94	70	2.76	95,5	3.76	88,5	3.48	13,5	0.53	8	0.31	12	0.47	40	1.57
FS2A 120	0	140	5.51	115	4.53	120	4.72	95	3.74	120,5	4.74	113,5	4.47	13,5	0.53	8	0.31	12	0.47	50	1.97
FS2A 150	0	190	7.48	145	5.71	165	6.5	120	4.72	150,5	5.93	143,5	5.65	17,5	0.69	8	0.31	12	0.47	60	2.36
FS2A 195	0	210	8.27	190	7.48	185	7.28	165	6.50	195,5	7.70	188	7.40	17,5	0.69	8	0.31	13	0.51	80	3.15

FS2C

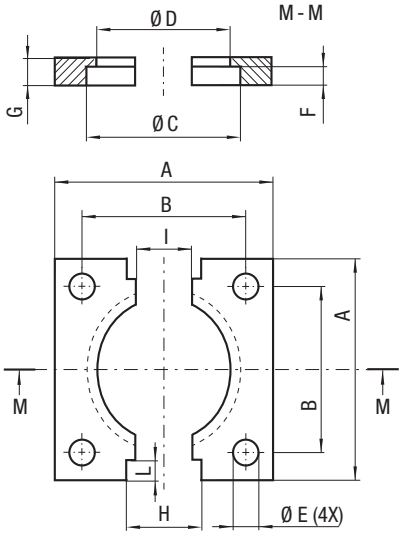

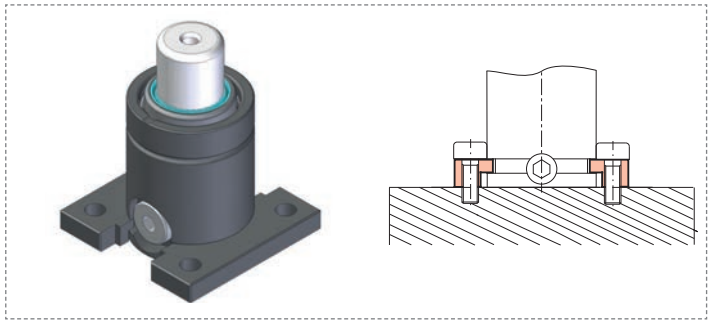

CODE	Reference to standards	A		B		C		D		Ø E		F		G		H		I		L	
		mm	inch	mm	inch	mm	inch	mm	inch	mm	inch	mm	inch	mm	inch	mm	inch	mm	inch	mm	inch
FS2C 32	0	50	1.97	35	1.38	32,5	1.28	28,5	1.12	6,6	0.26	4	0.16	7	0.28	21	0.83	17	0.67	6,5	0.26
FS2C 38	0	55	2.17	40	1.57	38,5	1.52	34,5	1.36	6,6	0.26	4	0.16	7	0.28	21	0.83	17	0.67	6,5	0.26

FS3

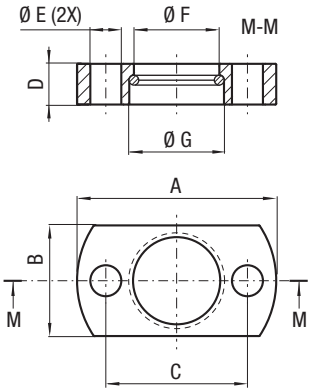

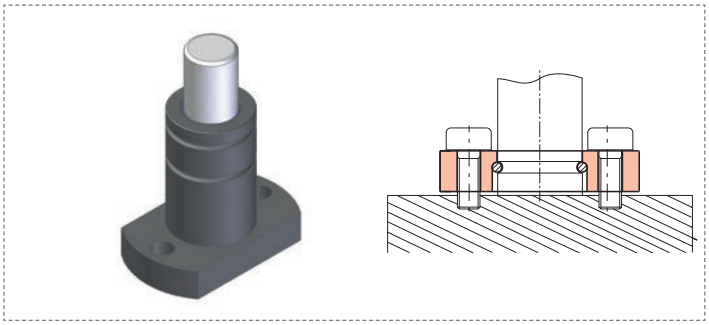

CODE	Reference to standards	A		B		C		D		Ø E		Ø F		Ø G	
		mm	inch	mm	inch	mm	inch	mm	inch	mm	inch	mm	inch	mm	inch
FS3 19	0	45	1.77	25	0.98	32	1.26	9,2	0.36	7	0.28	19,3	0.76	21,4	0.84
FS3 25	0	50	1.97	30	1.18	38	1.50	9,2	0.36	7	0.28	25,3	1.00	27,4	1.08

FCA

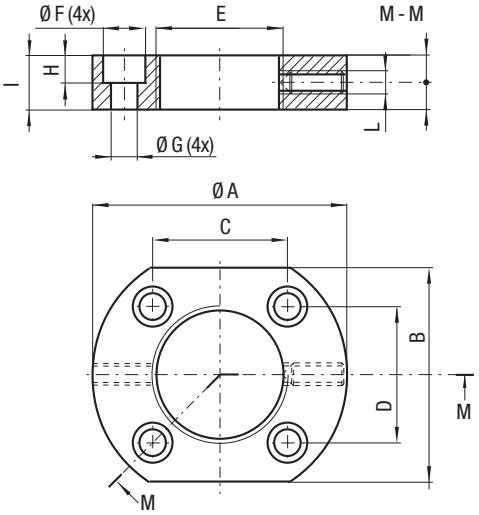

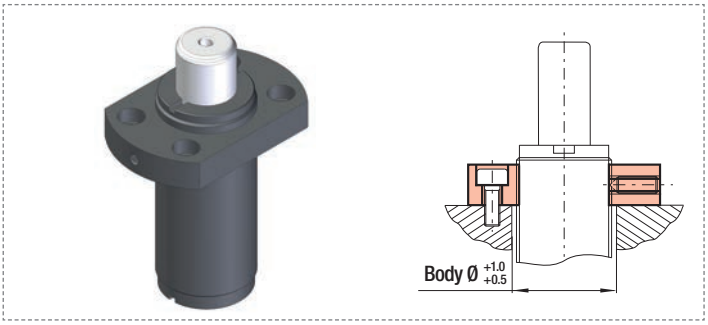

CODE	Reference to standards	Ø A		B		C		D		E	Ø F		Ø G		H		I		L
		mm	inch	mm	inch	mm	inch	mm	inch		mm	inch	mm	inch	mm	inch	mm	inch	
FCA 38	0	75	2.95	50	1.97	50,3	1.98	29	1.14	M 38 x 1,5	14	0.55	9	0.35	8	0.31	12	0.47	M6
⚠ FCA 45	0	90	3.54	60	2.36	60	2.36	34	1.34	M 45 x 1,5	14	0.55	9	0.35	8	0.31	16	0.63	M6
⚠ FCA 50	0-22	100	3.94	66	2.60	66	2.60	38	1.50	M 50 x 1,5	14	0.55	9	0.35	8	0.31	16	0.63	M6

⚠ **PHASING OUT**

FCB

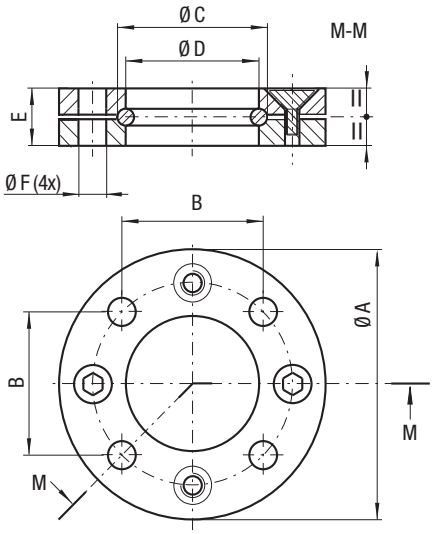

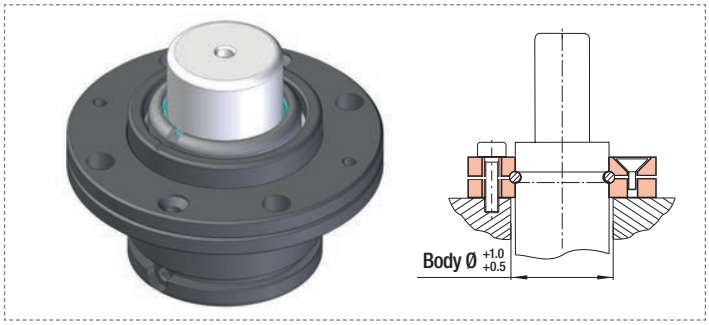

For **KE** series only

CODE	Reference to standards	Ø A		B		Ø C		Ø D		E		Ø F	
		mm	*inch*	mm	*inch*	mm	*inch*	mm	*inch*	mm	*inch*	mm	*inch*
FCB 50	0	95	*3.74*	56,5	*2.22*	52	*2.05*	50,5	*1.99*	13	*0.51*	9	*0.35*
FCB 63	0	122	*4.80*	73,5	*2.89*	66	*2.60*	63,5	*2.50*	16	*0.63*	11	*0.43*
FCB 75	0	122	*4.80*	73,5	*2.89*	78	*3.07*	75,5	*2.97*	16	*0.63*	11	*0.43*
FCB 95	0	150	*5.91*	92	*3.62*	98	*3.86*	95,5	*3.76*	18	*0.71*	13,5	*0.53*

FCD

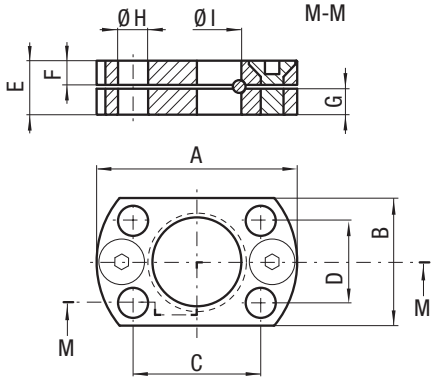

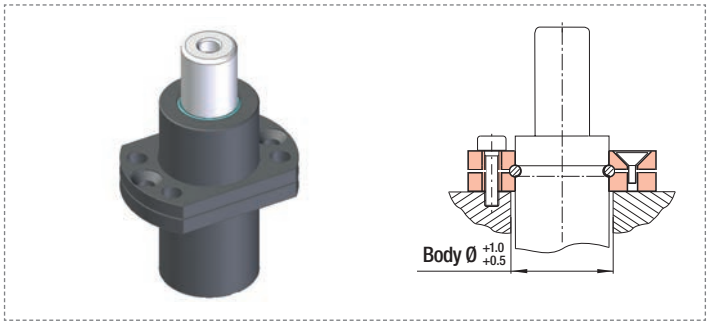

CODE	Reference to standards	A		B		C		D		E		F		G		Ø H		Ø I	
		mm	*inch*	mm	*inch*	mm	*inch*	mm	*inch*	mm	*inch*	mm	*inch*	mm	*inch*	mm	*inch*	mm	*inch*
FCD 19	0	44	*1.73*	28	*1.10*	28	*1.10*	18	*0.71*	11	*0.43*	5,2	*0.20*	5,6	*0.22*	6,6	*0.26*	19,5	*0.77*
FCD 25	0	50	*1.97*	30	*1.18*	34	*1.34*	18	*0.71*	11	*0.43*	5,2	*0.20*	5,6	*0.22*	6,6	*0.26*	25,5	*1.00*
FCD 32	0	57	*2.24*	39	*1.54*	40	*1.57*	22	*0.87*	11	*0.43*	5,2	*0.20*	5,6	*0.22*	6,6	*0.26*	32,5	*1.28*
FCD 38	0	63	*2.48*	46	*1.81*	45	*1.77*	26	*1.02*	11	*0.43*	5,2	*0.20*	5,6	*0.22*	6,6	*0.26*	38,5	*1.52*
FCD 50	0	75	*2.95*	58	*2.28*	54	*2.13*	34	*1.34*	11	*0.43*	6,2	*0.24*	4,6	*0.18*	6,6	*0.26*	50,5	*1.99*
FCD 63	0	98	*3.86*	76	*2.99*	74	*2.91*	40	*1.57*	13	*0.51*	8,9	*0.35*	3,9	*0.15*	9	*0.35*	63,5	*2.50*

FC - FCC

ISO	VDI	BMW	Ford
General Motors	Mercedes Benz	Peugeot - Citroën	Volkswagen

SPECIAL SPRINGS

(ISO)

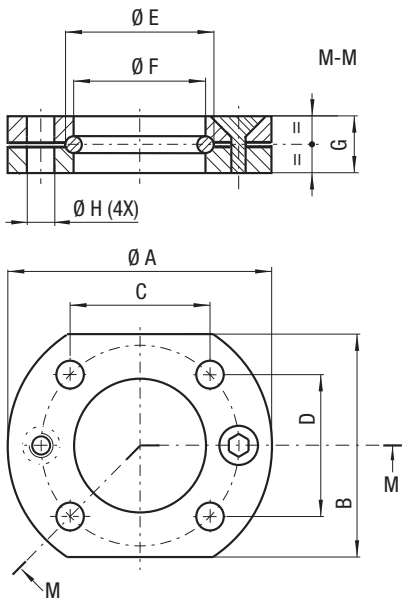

(VDI)

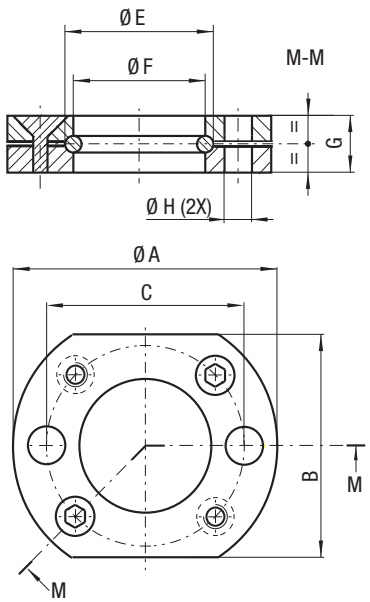

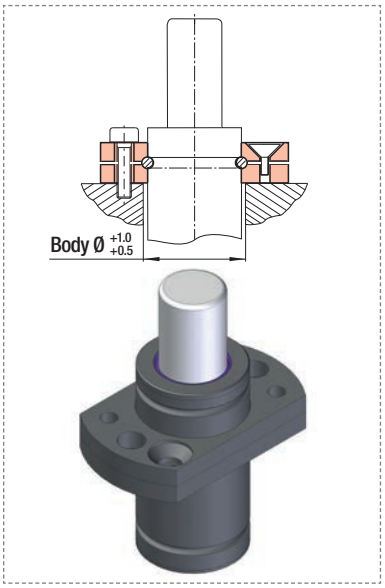

CODE	Reference to standards	Ø A		B		C		D		Ø E		Ø F		G		Ø H	
		mm	inch	mm	inch	mm	inch	mm	inch	mm	inch	mm	inch	mm	inch	mm	inch
FC 12 A	0	34	1.34	21	0.83	24	0.94	-	-	13,7	0.54	12,5	0.49	9	0.35	6,6	0.26
FC 15 A	0	37	1.36	24	0.94	27	1.06	-	-	16,7	0.66	15,5	0.61	9	0.35	6,6	0.26
FC 19 B	1-5	44	1.73	25	0.98	30	1.18	12	0.47	21,9	0.86	19,5	0.77	9	0.35	6,6	0.26
FC 25 B	1-5	50	1.97	30	1.18	34	1.34	18	0.71	27,9	1.10	25,5	1.00	9	0.35	6,6	0.26
FCC 19 A	2-3-17-21-23	44	1.73	25	0.98	32	1.26	-	-	21	0.83	19,5	0.77	9	0.35	6,6	0.26
FCC 25 A	2-3-17-19-21-23	50	1.97	30	1.18	38	1.50	-	-	27	1.06	25,5	1.00	9	0.35	6,6	0.26

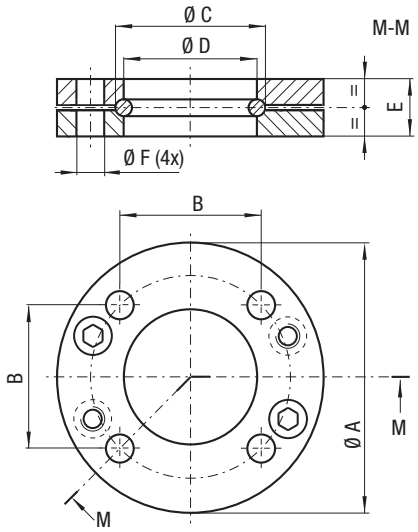

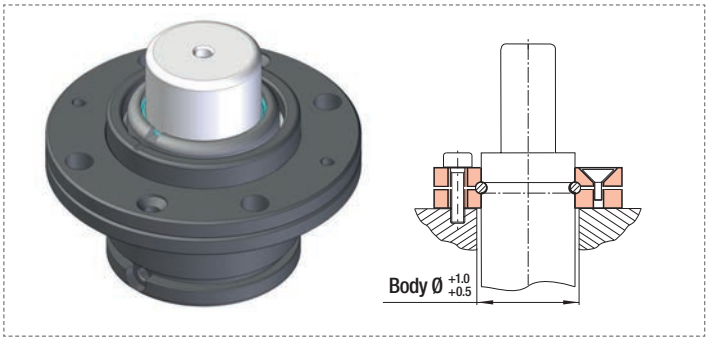

CODE	Reference to standards	Ø A		B		Ø C		Ø D		E		Ø F	
		mm	inch	mm	inch	mm	inch	mm	inch	mm	inch	mm	inch
FC 32 A	1-2-3-9-16-24	60	2.36	35	1.38	34	1.34	32,5	1.28	9	0.35	7	0.28
FC 38 A	1-2-3-9-16-24	68	2.68	40	1.57	40	1.57	38,5	1.52	9	0.35	7	0.28
FC 45 A	1-2-3-9-16-24	86	3.39	50	1.97	47	1.85	45,5	1.79	13	0.51	9	0.35
FC 50 A	1-2-3-9-16-24	95	3.74	56,5	2.22	54	2.13	50,5	1.99	13	0.51	9	0.35
FC 63 A	0	122	4.80	73,5	2.89	67	2.64	63,5	2.50	16	0.63	11	0.43
FC 75 A	1-2-3-9-16-24	122	4.80	73,5	2.89	80	3.15	75,5	2.97	16	0.63	11	0.43
FC 95 A	1-2-3-9-16-24	150	5.91	92	3.62	100	3.94	95,5	3.76	18	0.71	13,5	0.53
FC 120 A	1-2-3-9-16-24	175	6.89	109,5	4.31	125	4.92	120,5	4.74	21	0.83	13,5	0.53
FC 150 A	1-2-3-9-16-24	220	8.66	138	5.43	155	6.10	150,5	5.93	27	1.06	17,5	0.69
FC 195 A	1-2-9-16-24	290	11.42	170	6.69	200	7.87	195,5	7.70	27	1.06	17,5	0.69

ISO	VDI	BMW	Ford
General Motors	Volkswagen		

FCQ - FCQC

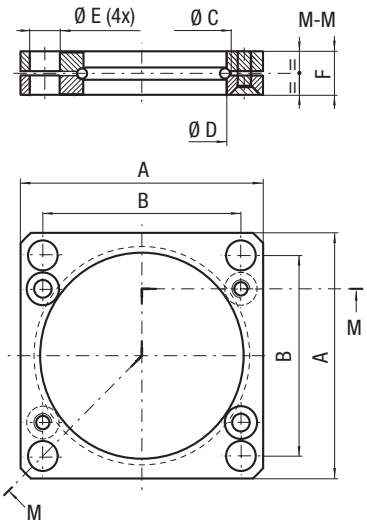

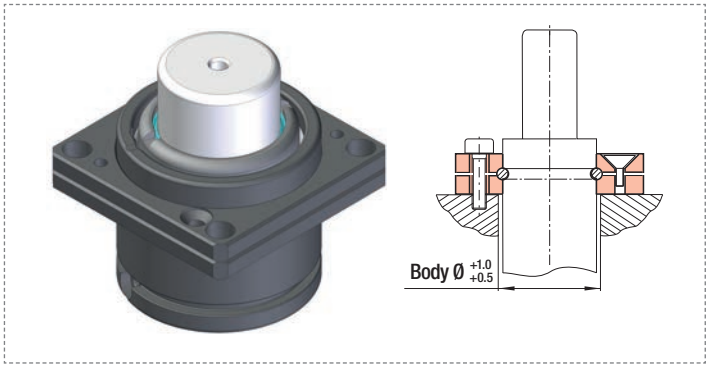

CODE		Reference to standards	A		B		Ø C		Ø D		Ø E		F	
PHASING OUT	NEW		mm	inch	mm	inch	mm	inch	mm	inch	mm	inch	mm	inch
FCQ 32 A	FCQC 32	2-4-8-25	45	1.77	35	1.38	34	1.34	32,5	1.28	7	0.28	9	0.26
FCQ 38 A	FCQC 38	1-2-3-4-8-25	52	2.05	40	1.57	40	1.57	38,5	1.52	7	0.28	9	0.35
FCQ 45 A	FCQC 45	1-2-3-4-8-25	64	2.52	50	1.97	47	1.85	45,5	1.79	9	0.35	13	0.51
FCQ 50 A	FCQC 50	1-2-3-4-8-25	70	2.76	56,5	2.22	54	2.13	50,5	1.99	9	0.35	13	0.51
FCQ 63 A	FCQ 63 A	25	90	3.54	73,5	2.89	67	2.64	63,45	2.50	11	0.43	16	0.63
FCQC 63	FCQC 63	2-4-21	80	3.15	64	2.52	67	2.64	63,45	2.50	11	0.43	16	0.63
FCQ 75 A	FCQC 75	1-2-3-4-8-25	90	3.54	73,5	2.89	80	3.15	75,5	2.97	11	0.43	16	0.63
FCQ 95 A	FCQC 95	1-2-3-4-8-25	110	4.33	92	3.62	100	3.94	95,5	3.76	13,5	0.53	18	0.71
FCQ 120 A	FCQC 120	1-2-3-4-8-25	130	5.12	109,5	4.31	125	4.92	120,5	4.74	13,5	0.53	21	0.83
FCQ 150 A	FCQC 150	1-2-3-4-8-25	162	6.38	138	5.43	155	6.10	150,5	5.93	17,5	0.69	27	1.06
FCQ 195 A	FCQC 195	1-2-4-8-25	210	8.27	170	6.69	200	7.87	195,5	7.70	17,5	0.69	27	1.06

FCQB - FCQD

For **KE** series only

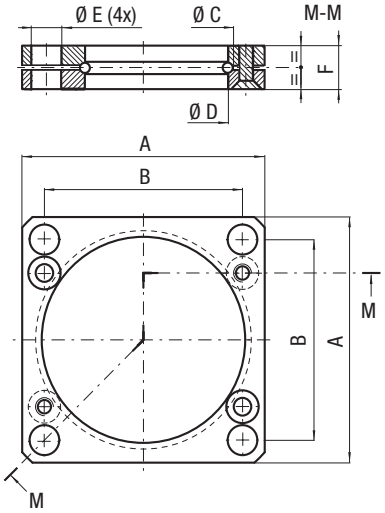

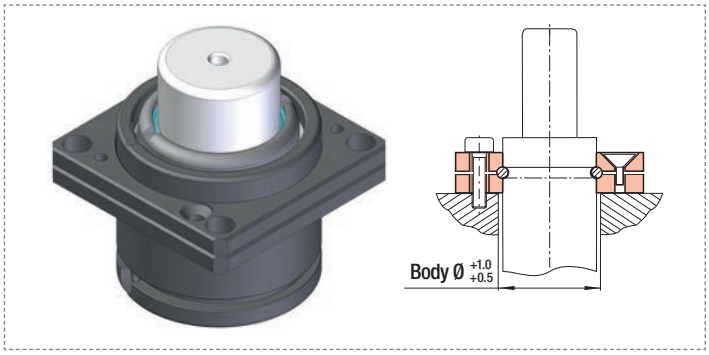

CODE	Reference to standards	A		B		Ø C		Ø D		Ø E		F	
		mm	inch	mm	inch	mm	inch	mm	inch	mm	inch	mm	inch
FCQB 50	0	70	2.76	56,5	2.22	52	2.05	50,5	1.99	9	0.35	13	0.51
FCQB 63	0	90	3.54	73,5	2.89	66	2.60	63,5	2.50	11	0.43	16	0.63
FCQD 63	0	80	3.15	64	2.52	66	2.60	63,5	2.50	11	0.43	16	0.63
FCQB 75	0	90	3.54	73,5	2.89	78	3.07	75,5	2.97	11	0.43	16	0.63
FCQB 95	0	110	4.33	92	3.62	98	3.86	95,5	3.76	13,5	0.53	18	0.71

FT

Fig. 1

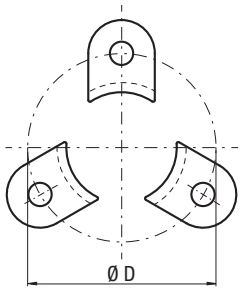

Fig. 2

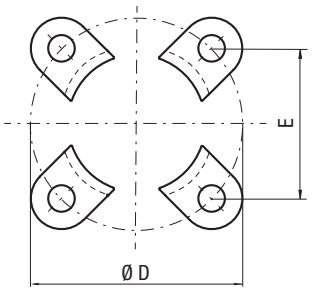

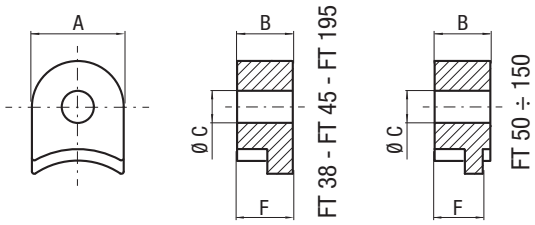

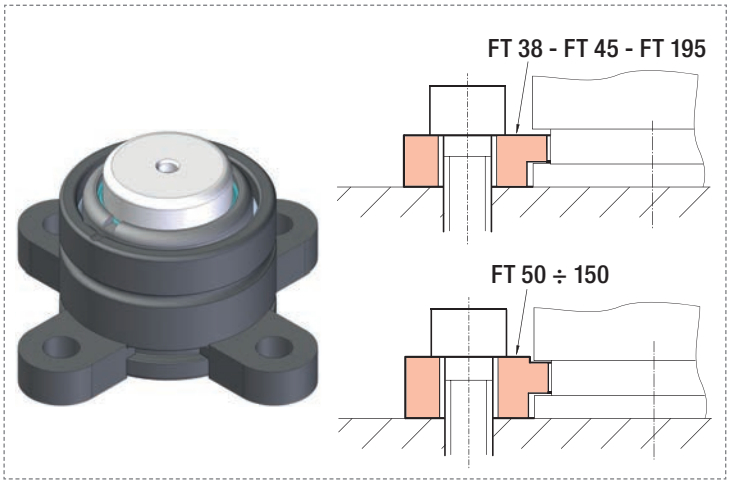

Std. box 1 pz =

Order ex. FT 38 - 3pz =

CODE	Reference to standards	A		B		C		Ø D		E		F		Rif. Fig
		mm	inch	mm	inch	mm	inch	mm	inch	mm	inch	mm	inch	
FT 38	0	20	0.79	7	0.28	7	0.28	56,6	2.23	-	-	7	0.28	Fig. 1
FT 45	0	25	0.98	7	0.28	9	0.35	70,7	2.78	-	-	7	0.28	
FT 50	0	30	1.18	14,2	0.56	13	0.51	80	3.15	-	-	13	0.51	
FT 63	0	30	1.18	14,2	0.56	13	0.51	92	3.62	65	2.56	13	0.51	Fig. 2
FT 75	0	30	1.18	14,2	0.56	13	0.51	104	4.09	73,5	2.89	13	0.51	
FT 95	0	40	1.57	14,2	0.56	17	0.67	130	5.12	92	3.62	13	0.51	
FT 120	0	50	1.97	14,2	0.56	17	0.67	155	6.1	109,5	4.31	13	0.51	
FT 150	0	50	1.97	14,2	0.56	21	0.83	195	7.68	138	5.43	13	0.51	
FT 195	0	58	2.28	16	0.63	21	0.83	240	9.45	169	6.65	16	0.63	

FTP

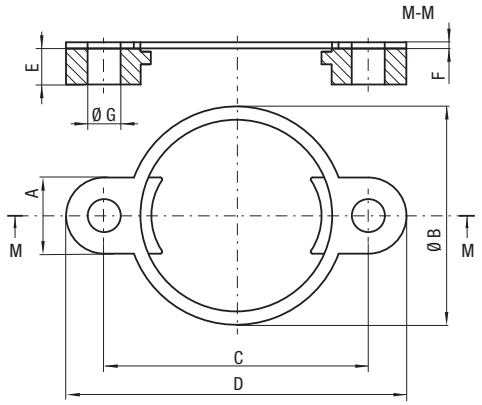

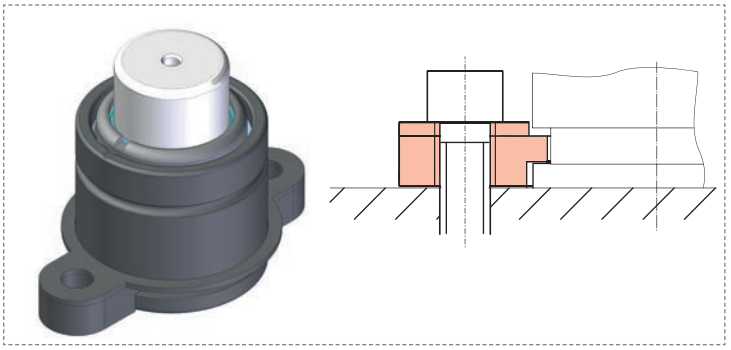

CODE	Reference to standards	A		Ø B		C		D		E		F		Ø G	
		mm	inch	mm	inch	mm	inch	mm	inch	mm	inch	mm	inch	mm	inch
FTP 38	0	20	0.79	48	1.89	56.6	2.23	76.6	3.02	7	0.28	2,5	0.10	7	0.28
FTP 45	0	25	0.98	56	2.20	70.7	2.78	95.7	3.77	7	0.28	2,5	0.10	9	0.35
FTP 50	0	30	1.18	61	2.40	80	3.15	110	4.33	14,2	0.56	2,5	0.10	13	0.51
FTP 63	0	30	1.18	73	2.87	92	3.62	122	4.80	14,2	0.56	2,5	0.10	13	0.51
FTP 75	0	30	1.18	86	3.39	104	4.09	134	5.28	14,2	0.56	2,5	0.10	13	0.51
FTP 95	0	40	1.57	106	4.17	130	5.12	170	6.69	14,2	0.56	2,5	0.10	17	0.67
FTP 120	0	50	1.97	131	5.16	155	6.10	205	8.07	14,2	0.56	2,5	0.10	17	0.67
FTP 150	0	50	1.97	170	6.69	195	7.68	245	9.65	14,2	0.56	2,5	0.10	21	0.83

ISO	VDI	BMW	General Motors

FSA - FSF

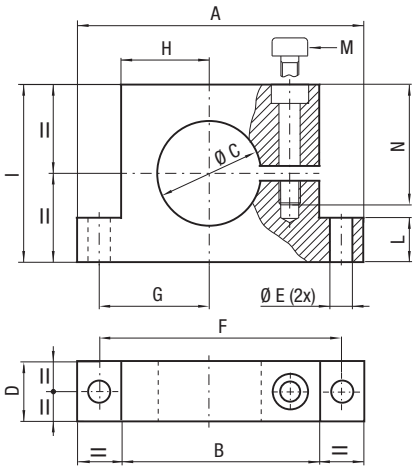

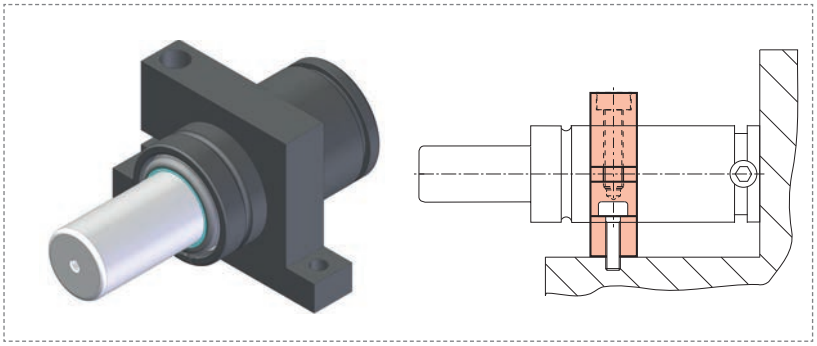

CODE	Reference to standards	A		B		Ø C		D		Ø E		F		G		H		I		L		M	N	
		mm	inch	mm	inch	mm	inch	mm	inch	mm	inch	mm	inch	mm	inch	mm	inch	mm	inch	mm	inch		mm	inch
FSA 32	1-2-3-13-19	90	3.54	54	2.13	32	1.26	20	0.79	9	0.35	72	2.83	31	1.22	22	0.87	45	1.77	15	0.59	M8	39	1,54
FSF 32	12	90	3.54	54	2.13	32	1.26	30	1.18	8,5	0.33	72	2.83	31	1.22	22	0.87	45	1.77	15	0.59	M8	40	1,57
FSA 38	1-2-3-13-19	95	3.74	59	2.32	38	1.50	20	0.79	9	0.35	77	3.03	34	1.34	25	0.98	55	2.17	15	0.59	M8	45	1,77
FSF 38	12	95	3.74	59	2.32	38	1.50	30	1.18	8,5	0.33	77	3.03	34	1.34	25	0.98	55	2.17	15	0.59	M8	46	1,81
FSA 45	1-2-3-13-19	100	3.94	64	2.52	45	1.77	20	0.79	9	0.35	82	3.23	37	1.46	28	1.10	60	2.36	15	0.59	M8	45	1,77
FSF 45	12	100	3.94	64	2.52	45	1.77	30	1.18	8,5	0.33	82	3.23	37	1.46	28	1.10	60	2.36	15	0.59	M8	52	2,05
FSA 50	1-2-3-13-19	130	5.12	90	3.54	50	1.97	30	1.18	9	0.35	110	4.33	50	1.97	40	1.57	80	3.15	20	0.79	M8	55	2,17
FSA 75	1-2-3-13-19	160	6.30	115	4.53	75	2.95	30	1.18	11	0.43	137	5.39	63,5	2.50	52,5	2.07	105	4.13	20	0.79	M10	80	3,15
FSA 95	1-2-3-13-19	195	7.68	145	5.71	95	3.74	30	1.18	13,5	0.53	170	6.69	80	3.15	67,5	2.66	125	4.92	20	0.79	M12	99,5	3,92
FSA 120	1-2-3-13-19	220	8.66	165	6.50	120	4.72	30	1.18	13,5	0.53	195	7.68	92,5	3.64	77,5	3.05	148	5.83	20	0.79	M12	106	4,17
FSA 150	1-2-3-13-19	260	10.24	200	7.87	150	5.91	30	1.18	13,5	0.53	230	9.06	110	4.33	95	3.74	200	7.87	20	0.79	M12	138	5,43

VDI	BMW	Ford	Mercedes Benz

FSB - FSC - FSD

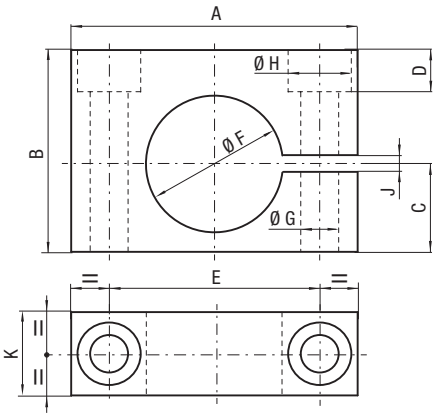

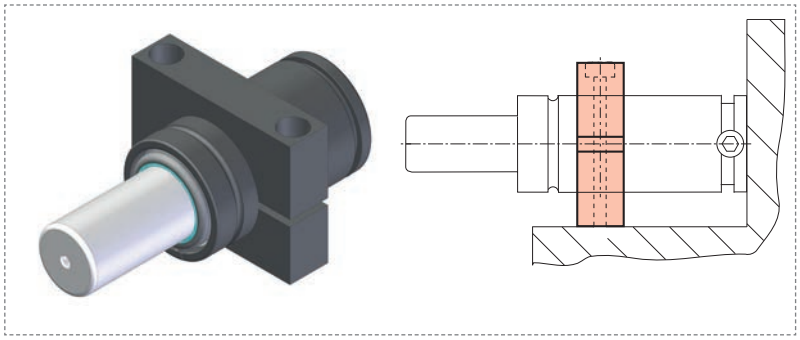

CODE	Reference to standards	A		B		C		D		E		Ø F		Ø G		Ø H		J		K	
		mm	inch	mm	inch	mm	inch	mm	inch	mm	inch	mm	inch	mm	inch	mm	inch	mm	inch	mm	inch
FSB 32	6	80	3.15	63	2.48	38,5	1.52	18	0.71	56	2.20	32	1.26	10,5	0.41	17	0.67	6	0.24	25	0.98
FSD 32	2-3-12-18-21-27	68	2.68	48	1.89	20,9	0.82	10	0.39	50	1.97	32,5	1.28	9	0.35	15	0.59	4	0.16	20	0.79
FSD 38	2-3-12-18-21-27	74	2.91	54	2.13	23,9	0.94	16	0.63	54	2.13	38,5	1.52	9	0.35	15	0.59	4	0.16	20	0.79
FSD 45	2-3-12-18-21-27	80	3.15	60	2.36	27,5	1.08	22	0.87	60	2.36	45,5	1.79	9	0.35	15	0.59	4	0.16	20	0.79
FSD 50	2-3-4-12-18-21-27	90	3.54	70	2.76	30	1.18	25	0.98	68	2.68	50,5	1.99	11	0.43	18	0.71	5	0.20	30	1.18
FSC 63	0	105	4.13	80	3.15	40	1.57	11	0.43	80	3.15	63	2.48	10,5	0.41	17	0.67	10	0.39	30	1.18
FSD 63	2-18-21-27	108	4.25	82	3.23	36,5	1.44	27	1.06	84	3.31	63,5	2.50	11	0.43	18	0.71	5	0.20	30	1.18
FSD 75	2-3-4-12-18-21-27	125	4.92	94	3.70	42	1.65	32	1.26	100	3.94	75,5	2.97	13,5	0.53	20	0.79	5	0.20	30	1.18
FSD 95	2-3-4-12-18-21-27	140	5.51	115	4.53	52,5	2.07	33	1.30	115	4.53	95,5	3.76	13,5	0.53	20	0.79	5	0.20	30	1.18
FSD 120	2-3-12-18-21-27	170	6.69	140	5.51	65	2.56	58	2.28	145	5.71	120,5	4.74	13,5	0.53	20	0.79	7	0.28	30	1.18
FSD 150	2-3-12-18-21-27	200	7.87	170	6.69	80	3.15	68	2.68	175	6.89	150,5	5.93	13,5	0.53	20	0.79	7	0.28	30	1.18

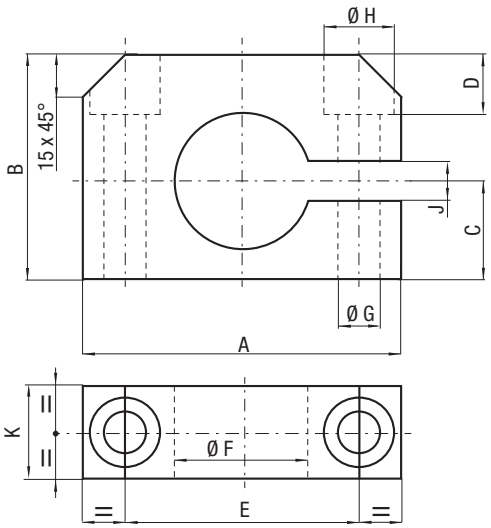

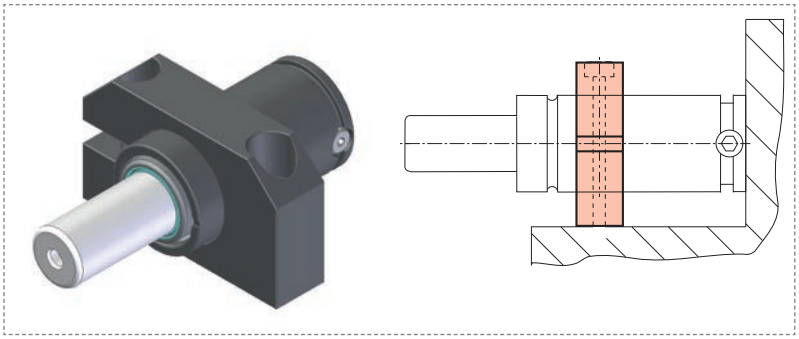

CODE	Reference to standards	A		B		C		D		E		Ø F		Ø G		Ø H		J		K	
		mm	inch	mm	inch	mm	inch	mm	inch	mm	inch	mm	inch	mm	inch	mm	inch	mm	inch	mm	inch
FSE 45	0	100	3.94	60	2.36	30	1.18	20	0.79	70	2.76	45,3	1.78	11	0.43	18	0.71	10	0.39	25	0.98

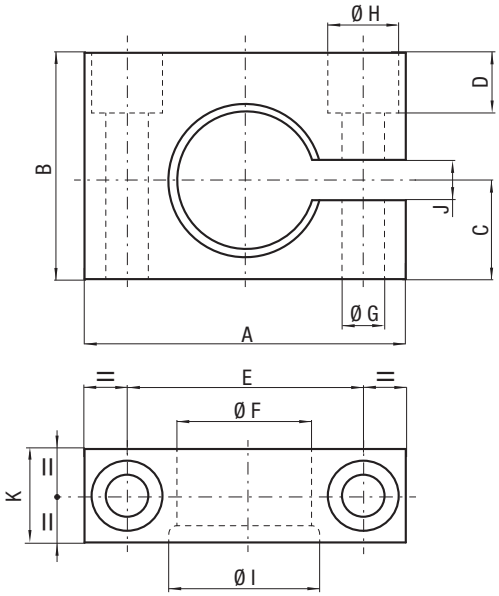

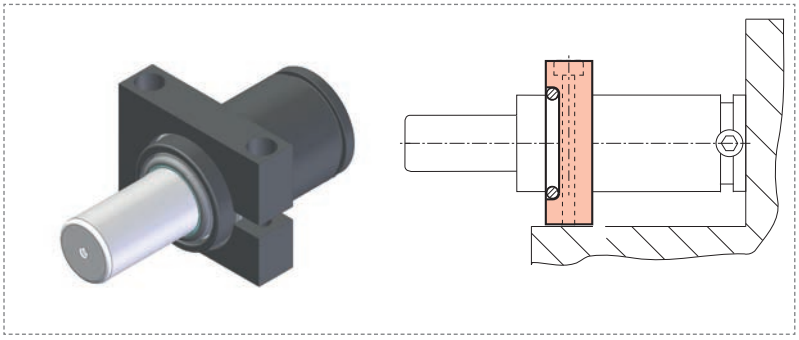

CODE	Reference to standards	A		B		C		D		E		Ø F		Ø G		Ø H		Ø I		J		K	
		mm	inch	mm	inch	mm	inch	mm	inch	mm	inch	mm	inch	mm	inch	mm	inch	mm	inch	mm	inch	mm	inch
FSE 50	11	90	3.54	70	2.76	30	1.18	25	0.98	68	2.68	50,3	1.98	11	0.43	18	0.71	54,1	2.13	10	0.39	30	1.18
FSE 75	11	125	4.92	94	3.70	42	1.65	19	0.75	100	3.94	75,3	2.96	13	0.51	20	0.79	80,1	3.15	10	0.39	30	1.18
FSE 95	11	140	5.51	115	4.53	52.5	2.07	40	1.57	115	4.53	95,3	3.75	13	0.51	20	0.79	100,1	3.94	10	0.39	30	1.18

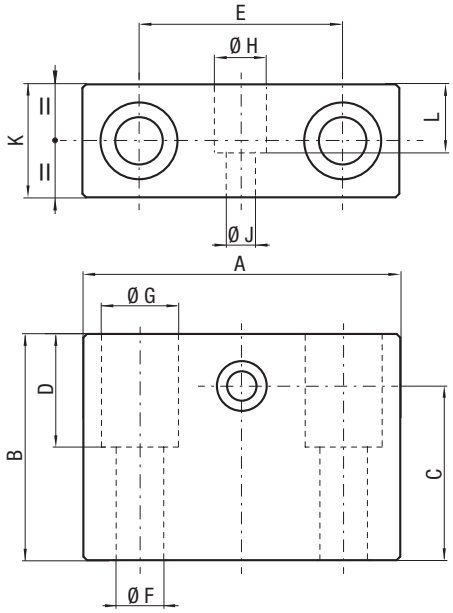

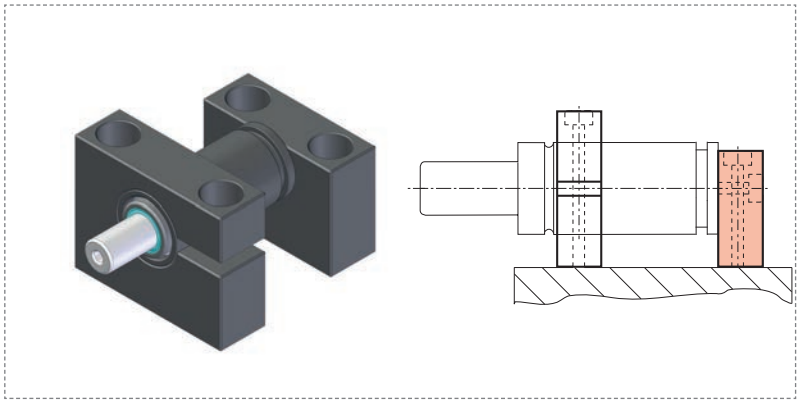

CODE	Reference to standards	A		B		C		D		E		Ø F		Ø G		Ø H		Ø J		L		K	
		mm	inch	mm	inch	mm	inch	mm	inch	mm	inch	mm	inch	mm	inch	mm	inch	mm	inch	mm	inch	mm	inch
R 32 A	5	70	2.76	50	1.97	38,5	1.52	25	0.98	45	1.77	10,5	0.41	17	0.67	11	0.43	6,5	0.26	15	0.59	25	0.98

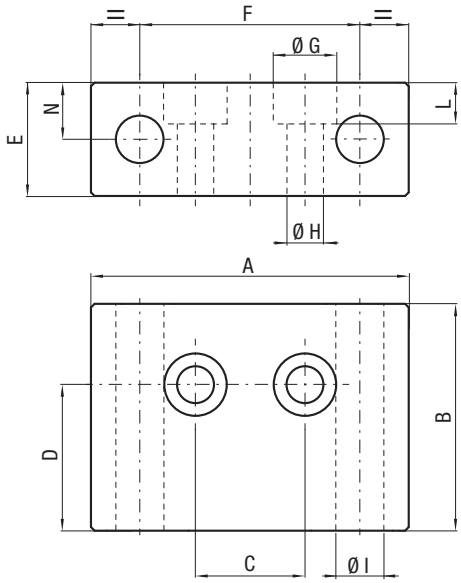

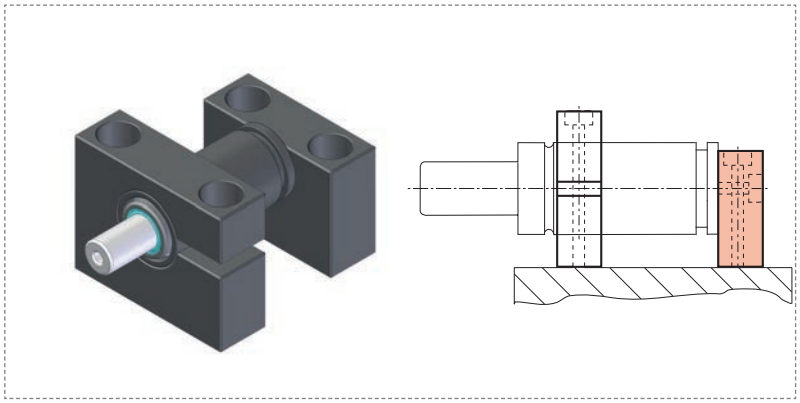

CODE	Reference to standards	A		B		C		D		E		F		Ø G		Ø H		L		Ø I		N	
		mm	inch	mm	inch	mm	inch	mm	inch	mm	inch	mm	inch	mm	inch	mm	inch	mm	inch	mm	inch	mm	inch
R 38 A	4	60	2.36	38	1.50	18	0.71	23,9	0.94	28	1.10	40	1.57	14	0.55	9	0.35	10	0.39	9	0.35	12	0,47
R 50 A	11	65	2.56	45	1.77	20	0.79	30	1.18	28	1.10	44	1.73	14	0.55	9	0.35	10	0.39	11	0.43	13	0,51
R 75 A	11	80	3.15	45	1.77	28,3	1.11	27,8	1.09	28	1.10	57	2.24	14	0.55	9	0.35	10	0.39	14	0.55	12	0,47
R 95 A	11	95	3.74	45	1.77	42,4	1.67	31,2	1.23	28	1.10	70	2.76	14	0.55	9	0.35	10	0.39	14	0.55	15	0,59

GM

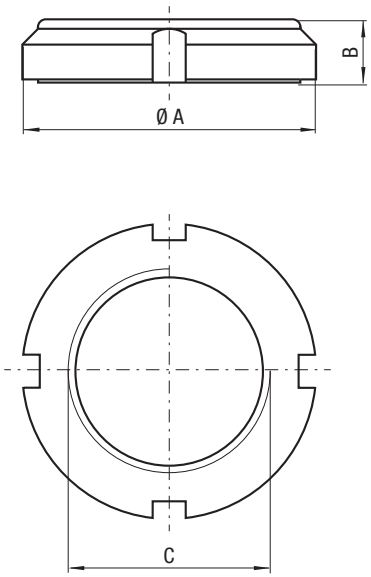

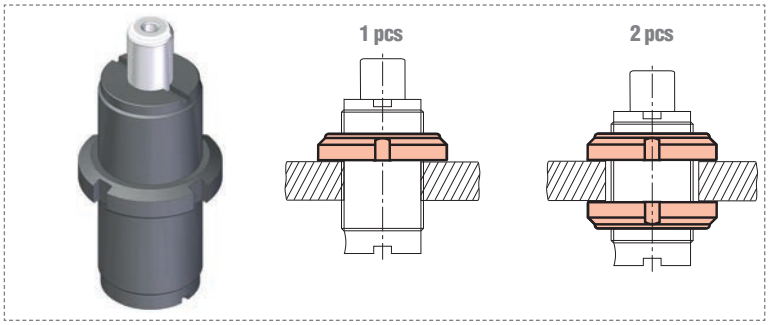

CODE (1 pcs)	Reference to standards	Ø A		B		C
		mm	*inch*	mm	*inch*	
GM 38	0	53	*2.09*	12	*0.47*	M 38 X 1,5
⚠ GM 45	0	62	*2.44*	12,3	*0.48*	M 45 X 1,5
⚠ GM 50	0	68	*2.68*	12,9	*0.51*	M 50 X 1,5

⚠ Phasing out

DM - DI

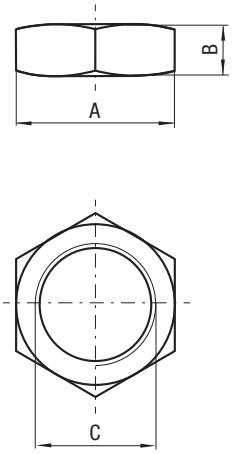

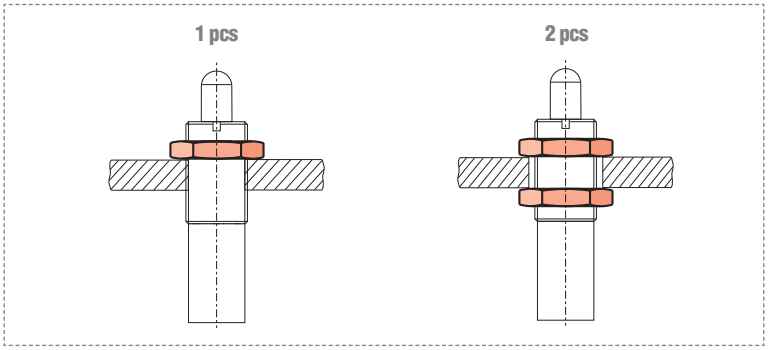

CODE (1 pcs)	Reference to standards	A	B		C
			mm	*inch*	
DM 16	0-28	S24	8	*0.31*	M 16 x 1,5
39DM16X2A	0	S24	8	*0.31*	M 16 x 2
39DI5/8-11A	0	S26	9	*0.36*	5/8" - 11 UNC
DM 24	0-28	S36	10	*0.39*	M 24 x 1,5
DI 1" - 8	0	S38	14	*0.55*	1" - 8

easy MANIFOLD since 1997

the easy way
to link nitrogen cylinders through plate

OSAS
Over Stroke
Active Safety

USAS
Uncontrolled Speed
Active Safety

OPAS
Over Pressure
Active Safety

SKUDO
Active Protection
from Contaminants

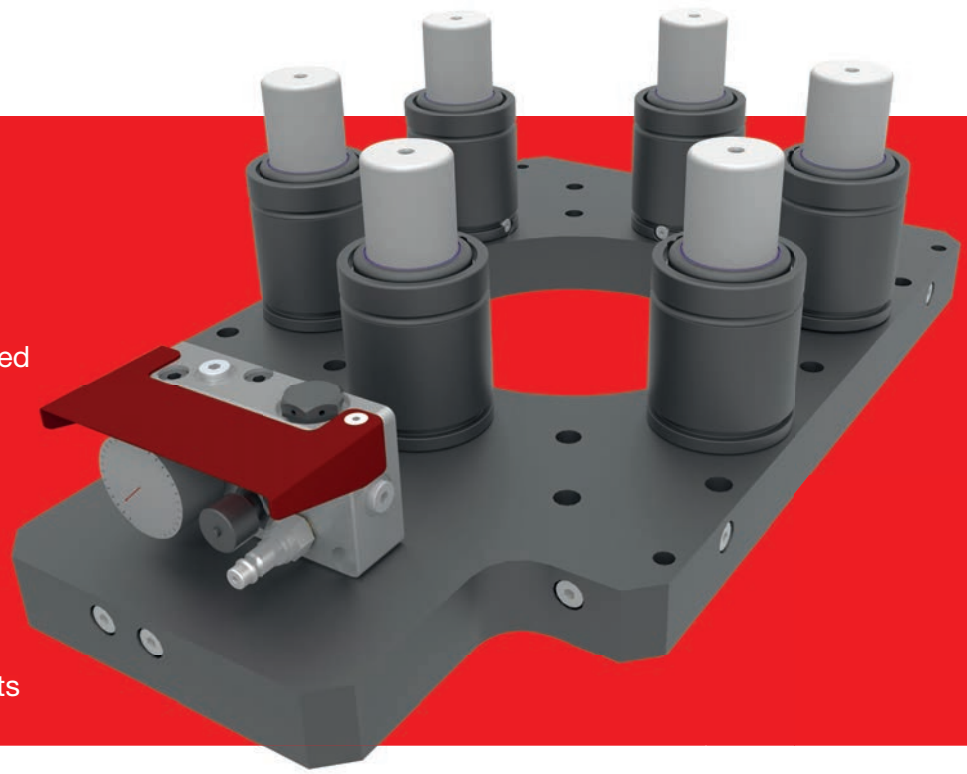

E - ED - EV versions

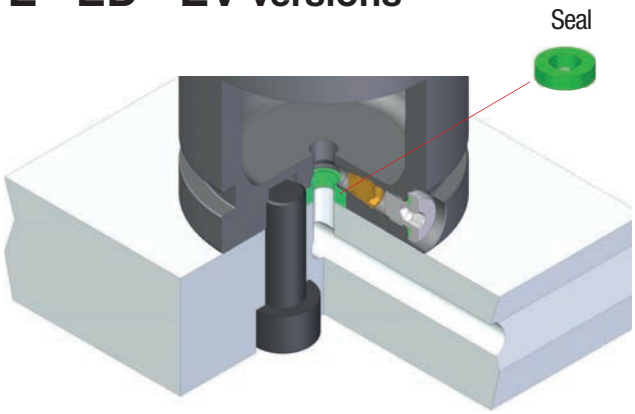

EN version

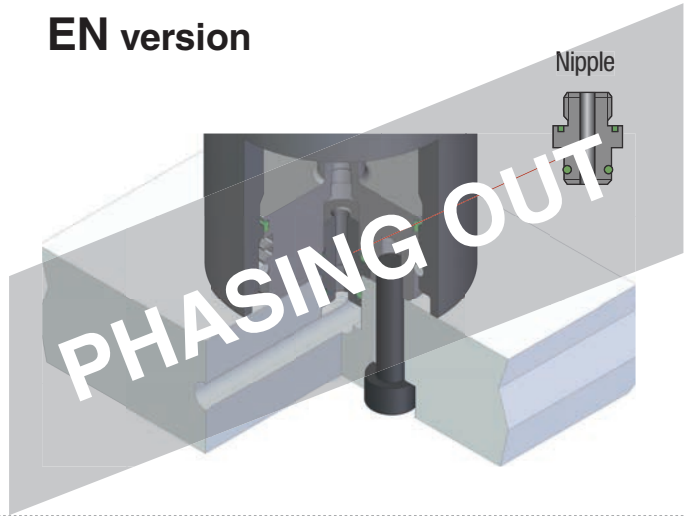

IT **CARATTERISTICHE:**

- Vantaggiosa alternativa ai tradizionali e costosi cilindri Manifold.
- Grande varietà di combinazioni con l'uso di cilindri standard.
- Totale eliminazione di tubi e raccordi.
- Pressione uniforme nel sistema.
- Facile manutenzione, uguale ai cilindri standard.
- Piastre di collegamento realizzabili direttamente dagli utilizzatori.
- Massima flessibilità di realizzazione degli impianti.
- Nessuna richiesta di utensili speciali per l'installazione.
- **Special Springs è in grado di fornire le piastre/cuscino su specifiche del cliente, collaudate e pronte per l'installazione.**

EN **CHARACTERISTICS:**

- An advantageous alternative to conventional and expensive. Manifold cylinders.
- Large variety of combinations with the use of standard cylinders.
- Total elimination of hoses and connections.
- Balanced pressure in the system.
- Easy maintenance, the same as standard cylinders.
- Connection plates can be made directly by users.
- Maximum flexibility in creation of systems.
- No special tools required for installation.
- **Special Springs can supply the plates/cushion to customer specifications, tested and ready for installation.**

FR **CARACTERISTIQUES:**

- Une alternative avantageuse aux traditionnels et coûteux cylindres Manifold.
- Une grande variété de combinaisons avec l'emploi de cylindres standard.
- L'élimination totale de tuyaux et raccords.
- Pression uniforme dans le système.
- Entretien facile, comme celui des cylindres standard.
- Plaques de liaison réalisables directement par les utilisateurs.
- Très grande souplesse de réalisation des installations.
- Aucun besoin d'outils spéciaux pour l'installation.
- **Special Springs est en mesure de fournir les plaques/coussin sur spécifications du client, testées et prêtes à être installées.**

ES **CARACTERÍSTICAS:**

- Ventajosa alternativa a los tradicionales y costosos cilindros Manifold.
- Gran variedad de combinaciones con el uso de cilindros (autónomos) estándar.
- Total eliminación de tubos y racores.
- Presión uniforme en el sistema.
- Fácil manutención, igual a la de los cilindros (autónomos) estándar.
- Placas de conexión realizables directamente por los usuarios.
- Máxima flexibilidad de realización de los equipos.
- No se requiere ninguna herramienta especial para la instalación.
- **Special Springs es en grado de proporcionar las placas/cojín sobre especificaciones del cliente, Comprobadas y listas para la instalación.**

DE **EIGENSCHAFTEN**

- Preisgünstige Alternative zu herkömmlichen Tankplattensystemen.
- Große Auswahl an Einsatzkombinationen durch Verwendung von Standardzylindern.
- Keine Verwendung von Schläuchen und Anschlüssen.
- Gleichmäßiger Druck im System.
- Wartungsfreundlich.
- Verbundplatten können vom Kunden selbst gefertigt werden.
- Hohe Flexibilität bei den Anwendungen.
- Montage ohne Sonderwerkzeuge.
- **Platten können von Special Springs gefertigt, getestet und vormontiert geliefert werden.**

PT **CARACTERÍSTICAS:**

- Vantajosa alternativa aos tradicionais e caros cilindros Manifold.
- Grande variedade de combinações com uso de cilindros standard.
- Total eliminação de tubos e junções.
- Pressão uniforme en o sistema.
- Fácil manutenção, igual a dos cilindros standard.
- Chapas de conexão que podem ser realizadas diretamente pelos usuários.
- Máxima flexibilidade de realização das instalações.
- Não é necessário utilizar nenhum tipo de utensílio especial para a instalação.
- **Special Springs pode fornecer chapas/coxim conforme exigência do cliente, testadas e verificadas prontas para a instalação.**

Design recommendations

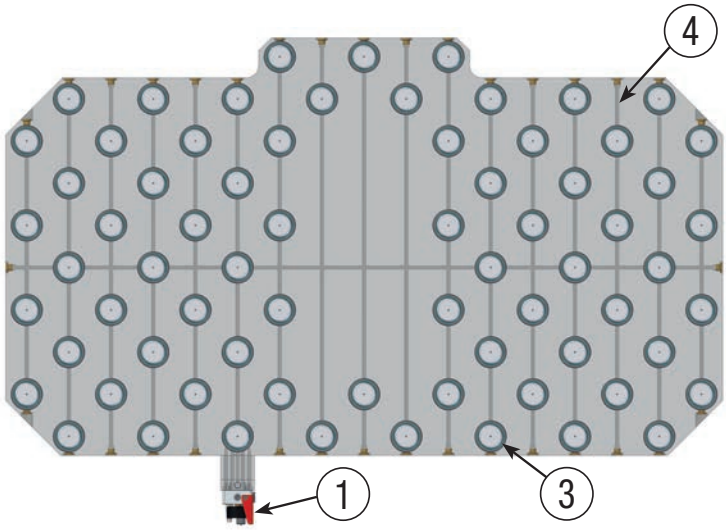

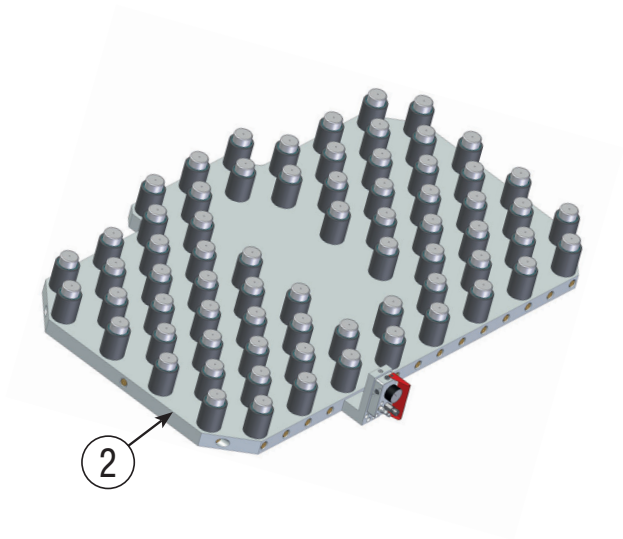

IT Per una facile progettazione e per ridurre i costi di produzione seguire le linee guida di cui sotto

(1)
- Per collegare il pannello usare, se possibile, i canali del gas esistenti.
- In alternativa collegare il pannello con tubi e raccordi.

(2)
- Resilienza materiale piastra alla temperatura minima di utilizzo ≥ 27J.
- Allungamento a rottura del materiale piastra ≥ 14%.

(3)
- Evitare interferenza tra i fori di fissaggio dei cilindri e i canali del gas.
- Selezionare cilindri con corse maggiori per aumentare il volume del sistema.

(4)
- Realizzare canali passanti e pulire adeguatamente.
- Evitare canali ciechi.

EN For easier design and manufacturing cost-saving follow the guide lines below

(1)
- When possible, use the existing gas ports to link the panel.
- Alternatively, link the panel by using hoses and connections.

(2)
- Resilience of the plate material at minimum operating temperature ≥ 27J.
- Elongation at break of plate material ≥ 14%.

(3)
- Avoid interference between the cylinder's fixing holes and the gas ports.
- Select cylinders with higher stroke to increase the volume of the system.

(4)
- Machine thru-holes and adequately clear the ports.
- Avoid blind channels.

DE Für eine bessere Empfehlung und produktionskosten zu speichern, folgen Sie die unteren Richtlinien

(1)
- Die Kontrollarmatur, wenn möglich, an den vorhandenen Tieflochbohrungen anbringen.
- Alternativ kann die Druckkontrollarmatur mit Schlauchkomponenten angeschlossen werden.

(2)
- Zähigkeit des Plattenmaterials bei minimaler Betriebstemperatur ≥ 27 J.
- Bruchdehnung des Plattenmaterials ≥ 14 %.

(4)
- Die Durchgangsbohrungen und Anschlüsse sauber fertigen.
- Die Durchgangsbohrungen nicht blind fertigen.

(3)
- Abweichungen zwischen der Lage der Befestigungsgewinde und den Verbindungsbohrungen sind zu vermeiden.
- Um das Volumen des Systems zu vergrößern, wählen Sie Gasdruckfedern mit dem nächst größeren Hub.

FR Pour une conception plus facile et de l'épargne des coûts de fabrications suivez les instructions ci-dessous

(1)
- Pour relier le panneau utiliser, si possible, les canaux du gaz existents.
- Alternativement, joindre le panneau en utilisant des tubes et des raccords.

(2)
- Résilience du matériau de la plaque à la température minimale de fonctionnement ≥ 27J.
- Allongement à la rupture du matériau de la plaque ≥ 14%.

(4)
- Réaliser des trous débouchants et nettoyez correctement.
- Eviter les trous sans issue.

(3)
- Eviter l'interférence entre les trous de fixation des ressorts et les canaux du gaz.
- Sélectionner des ressorts avec des courses majeures pour augmenter le volume du système.

ES Para facilitar el diseño y para ahorrar costes de producción siguen los lineamientos mencionados a continuación

(1)
- Para conectar el panel utilizar, si posible, los canales del gas existentes.
- En alternativa, conectar el panel con tuberías y conexiones.

(2)
- Resiliencia del material de la placa a la temperatura mínima de uso ≥ 27J.
- Alargamiento a la rotura del material de la placa ≥ 14%.

(3)
- Evitar la interferencia entre los orificios de fijacion de los cilindros y los canales de gas.
- Seleccionar los cilindros con carreras mas grande para aumentar el volumen del sistema.

(4)
- Realizar orificios pasantes por toda la placa y bien limpiar.
- Eviter les trous sans issue.

PT Para facilitar o desenho e economizar custos de produção seguir as orientações abaixo mencionados

(1)
- Para ligar o painel, se possível, usar os canais de gás existentes.
- Em alternativa conecte o painel com tubos e acessórios.

(2)
- Placa com resistencia minima a temperatura minima de > 27J.
- Alongamento de ruptura do material da placa ≥ 14%.

(3)
- Evitar a interferência entre os orifícios de fixação dos cilindros e os canais de gás.
- Escolher os cilindros com curso mais grande para aumentar o volume do sistema.

(4)
- Realizar orificios de passagem par toda a placa e bem limpar.
- Evitar orificios sem saída.

Series	Model	Rev. code	Version	Fixing pattern	Thread size D x A	Ø I		Ø C		Ø F		Ø S		Seal code	Note	Cover code
						mm	inch	mm	inch	mm	inch	mm	inch			> see pag 250
RV	350	A	E	α	M6 x 6	20	0.79	-		5	0.20	11	0.43	50GE02A	2	39TE010A
	500	A	E	β	M6 x 6	20	0.79	25	1.00	5	0.20	11	0.43	50GE02A	2	39TE001A
	750	A	E	γ	M8 x 6	26	1.02			5	0.20	11	0.43	50GE02A	2	39TE002A
	1000	A	E	γ	M8 x 6	34	1.34			5	0.20	11	0.43	50GE02A	2	39TE003A
	1200	A	E	γ	M8 x 6	34	1.34			5	0.20	11	0.43	50GE02A	2	39TE003A
	1500	A	E	γ	M8 x 6	34	1.34			5	0.20	11	0.43	50GE02A	2	39TE009A
	2400	A	E	γ	M8 x 6	40	1.57			5	0.20	11	0.43	50GE02A		39TE004A
	4200	A	E	γ	M8 x 12	60	2.36			8	0.31	15	0.59	50GE01A		39TE005A
	6600	A	E	γ	M10 x 12	80	3.15	-		8	0.31	15	0.59	50GE01A		39TE006A
	9500	A	E	γ	M10 x 13	100	3.94			8	0.31	15	0.59	50GE01A		39TE007A
	12000	A	E	γ	M10 x 13	100	3.94			8	0.31	15	0.59	50GE01A		39TE007A
	20000	A	E	γ	M12 x 16	120	4.72			8	0.31	15	0.59	50GE01A	-	39TE008A
	750	A	EV*	α	M8 x 6	20	0.79			5	0.20	11	0.43	50GE02A		39TE011A
	1000	A	EV*	α	M8 x 6	20	0.79			5	0.20	11	0.43	50GE02A		39TE011A
	1200	A	EV*	α	M8 x 6	20	0.79			5	0.20	11	0.43	50GE02A		39TE011A
	1500	A	EV*	α	M8 x 6	20	0.79			5	0.20	11	0.43	50GE02A		39TE011A
RS	350	A	E	α	M6 x 6	20	0.79			5	0.20	11	0.43	50GE02A	2	39TE010A
	500	A	E	β	M6 x 6	20	0.79	25	1.00	5	0.20	11	0.43	50GE02A	2	39TE001A
	750	A	E	γ	M8 x 6	26	1.02			5	0.20	11	0.43	50GE02A	2	39TE002A
	1000	A	E	γ	M8 x 6	34	1.34			5	0.20	11	0.43	50GE02A	2	39TE003A
	1200	A	E	γ	M8 x 6	34	1.34			5	0.20	11	0.43	50GE02A	2	39TE003A
	1500	A	E	γ	M8 x 6	34	1.34			5	0.20	11	0.43	50GE02A	2	39TE009A
	2400	A	E	γ	M8 x 6	40	1.57			5	0.20	11	0.43	50GE02A		39TE004A
	4200	A	E	γ	M8 x 12	60	2.36			8	0.31	15	0.59	50GE01A		39TE005A
	6600	A	E	γ	M10 x 12	80	3.15			8	0.31	15	0.59	50GE01A		39TE006A
	9500	A	E	γ	M10 x 13	100	3.94			8	0.31	15	0.59	50GE01A		39TE007A
RF	2400	A	E	γ	M8 x 13	40	1.57			8	0.31	15	0.59	50GE01A		39TE004A
RG	2400	A	E	γ	M8 x 16	40	1.57	-		8	0.31	15	0.59	50GE01A		39TE004A
	4200	A	E	γ	M8 x 16	60	2.36			8	0.31	15	0.59	50GE01A		39TE005A
	6600	A	E	γ	M10 x 16	80	3.15			8	0.31	15	0.59	50GE01A	-	39TE006A
RT	2400	A	E	γ	M12 x 16	53,9	2.12			8	0.31	15	0.59	50GE01A		39TE004A
	4200	A	E	γ	M12 x 16	76,2	3,00			8	0.31	15	0.59	50GE01A		39TE005A
	6600	A	E	γ	M12 x 16	80,8	3.18			8	0.31	15	0.59	50GE01A		39TE006A
	9500	A	E	γ	M12 x 16	100	3.94			8	0.31	15	0.59	50GE01A		39TE007A
S	1500	A	E	γ	M8 x 13	40	1.57			8	0.31	15	0.59	50GE01A		39TE004A
	3000	A	E	γ	M8 x 13	60	2.36			8	0.31	15	0.59	50GE01A		39TE005A
SC	150	D	E	α	M6 x 8	18	0.71			5	0.20	11	0.43	50GE02A	2	39TE012A
	250	D	E	β	M6 x 8	18	0.71	25	1.00	5	0.20	11	0.43	50GE02A	2	39TE012A
	500	D	E	α	M8 x 13	20	0.79			5	0.20	11	0.43	50GE02A	2	39TE011A
	750	D	E	α	M8 x 13	20	0.79			5	0.20	11	0.43	50GE02A	2	39TE011A
	1500	D	E	γ	M8 x 13	40	1.57			8	0.31	15	0.59	50GE01A		39TE004A
	3000	D	E	γ	M8 x 13	60	2.36			8	0.31	15	0.59	50GE01A		39TE005A
	5000	D	E	γ	M10 x 16	80	3.15	-		8	0.31	15	0.59	50GE01A	-	39TE006A
	7500	D	E	γ	M10 x 16	100	3.94			8	0.31	15	0.59	50GE01A		39TE007A
	10000	D	E	γ	M12 x 16	120	4.72			8	0.31	15	0.59	50GE01A		39TE008A
H	300	C	E	α	M6 x 8	18	0.71			5	0.20	11	0.43	50GE02A	2	39TE012A
	500	C	E	β	M6 x 8	18	0.71	25	1.00	5	0.20	11	0.43	50GE02A	2	39TE012A
	700	D	E	α	M8 x 13	20	0.79			5	0.20	11	0.43	50GE02A	2	39TE011A
	1000	D	E	α	M8 x 13	20	0.79			5	0.20	11	0.43	50GE02A	2	39TE011A
	1500	C	E	γ	M8 x 13	40	1.57			5	0.20	11	0.43	50GE02A		39TE004A
	2400	D	E	γ	M8 x 13	40	1.57			8	0.31	15	0.59	50GE01A		39TE004A
	4200	D	E	γ	M8 x 13	60	2.36	-		8	0.31	15	0.59	50GE01A		39TE005A
	6600	D	E	γ	M10 x 16	80	3.15			8	0.31	15	0.59	50GE01A	-	39TE006A
	9500	C	E	γ	M10 x 16	100	3.94			8	0.31	15	0.59	50GE01A		39TE007A
	18500	C	E	γ	M12 x 16	120	4.72			8	0.31	15	0.59	50GE01A		39TE008A
KE	750	B	ED	α	M6 x 8	24	0.94			5	0.20	11	0.43	50GE02A	1+2	39TE010A
	1000	B	ED	δ	M6 x 8	20	0.79	26	1.02	5	0.20	11	0.43	50GE02A	1+2	39TE001A
	1800	B	ED	γ	M6 x 8	26	1.02			5	0.20	11	0.43	50GE02A	1+2	39TE003A
	3000	B	ED	γ	M8 x 8	34	1.34			8	0.31	22	0.87	50GKS00208	1+2	39TE009A
	4700	B	ED	γ	M8 x 8	40	1.57			8	0.31	22	0.87	50GKS00208	1+2	39TE004A
	7500	B	ED	γ	M8 x 8	52	2.05	-		8	0.31	22	0.87	50GKS00208	1+2	39TE005A
	12000	B	ED	γ	M10 x 12	68	2.68			8	0.31	22	0.87	50GKS00208	1+2	39TE006A
	18500	B	ED	γ	M10 x 12	90	3.54			8	0.31	22	0.87	50GKS00208	1+2	39TE007A

* : Volswagen standard

E - ED - EV versions

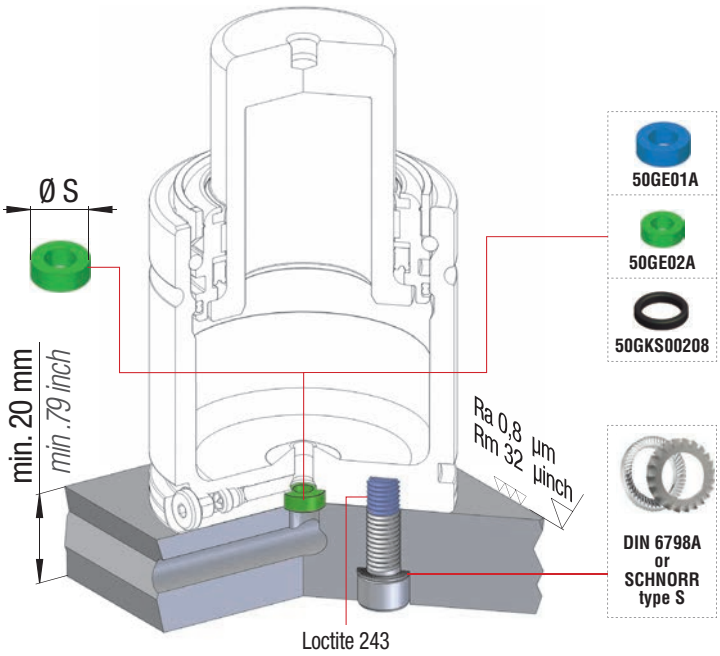

Example A > D : Thread size M8 x 13 (13 > 8)

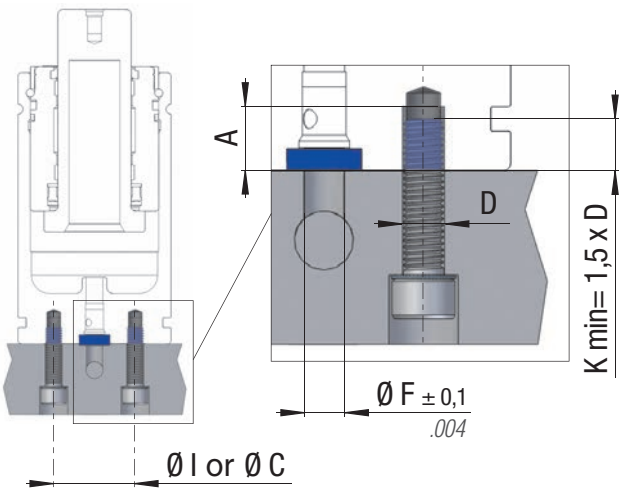

Example A ≤ D : Thread size M8 x 6 (6 ≤ 8)

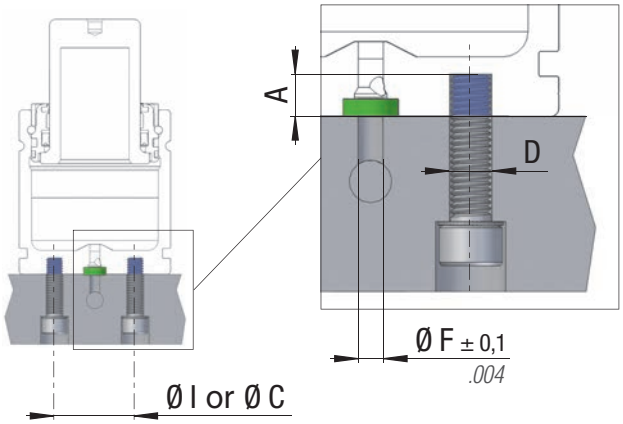

Ø I or Ø C	D	A
Interasse fissaggio Fixing c.t.c. distance Mittenabstand Entraxe Distancia centros Distância eixos	Dimensione viti Screw dimension Schraubengröße Dimension vis Tamaño tornillos Dimensão parafusos	Profondità filetti Thread depth Gewindetiefe Profondeur filet Profundidad rosca Profundidade rosca

K min	Ø F	Ø S
Minimo impegno viti Minimum thread engagement Mindest-Einschraublänge Longueur minimum à visser Recubrimiento mínimo rosca Comprimento minimo roscado	Ø Foro piastra - cilindro Ø Plate - Cylinder hole Ø Platten - Zylinder Loch Ø Trou plaque - cylindre Ø Agujero Placa - Cilindro Ø Furo Placa - Cilindro	Ø Guarnizione piastra - cilindro Ø Plate - Cylinder seal Ø Platten - Zylinder Dichtung Ø Joint plaque - cylindre Ø Junta Placa - Cilindro Ø Junta Placa - Cilindro

FIXING PATTERN

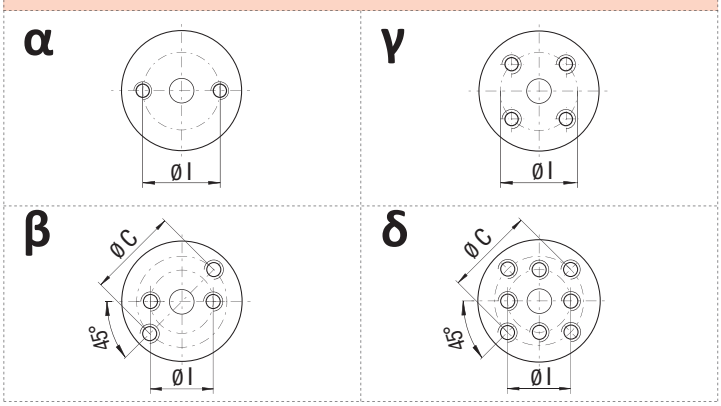

NOTE > see page 244

1	Modello con corpo liscio senza cave di fissaggio Model with straight body without fixing grooves Model mit flachem Körper ohne Befestigungsnuten Modèle avec corps lisse sans encoches de fixation Modelo con cuerpo parejo sin ranuras de fijación Modelo com corpo liso sem ranhuras de fixação
2	Modello con corpo senza foro di caricamento laterale Model with body without side charging port Model mit Körper ohne Nebenladeloch Modèle avec corps sans trou de charge latéral Modelo con cuerpo sin hueco de carga Modelo com corpo sem orifício de carregamen

IT Corse e ingombri uguali al cilindro autonomo
EN Strokes and sizes same to selfcontained cylinder
DE Hüben und Abmessungen gleiche zu den Autonomen Gdf
FR Courses et ecombrement égaux à ceux du Cylindre autonome
ES Carreras y dimensiones iguales a las del cilindro autónomo
PT Cursos e dimensões iguais às do cilindro autonómo

Series	Model	Rev. code	Version	Fixing pattern	Thread size D x A	Ø I mm	Ø I inch	Ø F mm	Ø F inch	Ø S mm	Ø S inch	Seal code	Note	Cover code > see pag 250
ML	1000	D	E	α	M6 x 7	17	0,67	5	0.20	7,5	0.29	50GE04A	1+2	-
	1800	D	E	γ	M6 x 8	26	1,02	8* or 10	0.31* or 0.39	14,5	0.57	50GE03A	1+2	39TE003A
	3000	D	E	γ	M8 x 8	34	1,34			14,5	0.57	50GE03A	1+2	39TE009A
	4700	D	E	γ	M8 x 8	40	1,57			14,5	0.57	50GE03A	1+2	39TE004A
	7500	D	E	γ	M8 x 8	52	2,05			14,5	0.57	50GE03A	1+2	39TE005A
	12000	D	E	γ	M10 x 8	68	2,68			14,5	0.57	50GE03A	1+2	39TE006A

* : dimensione preferita - preferred size - bevorzugte Größe - dimension préférée - tamaño preferido - tamanho preferido

E version

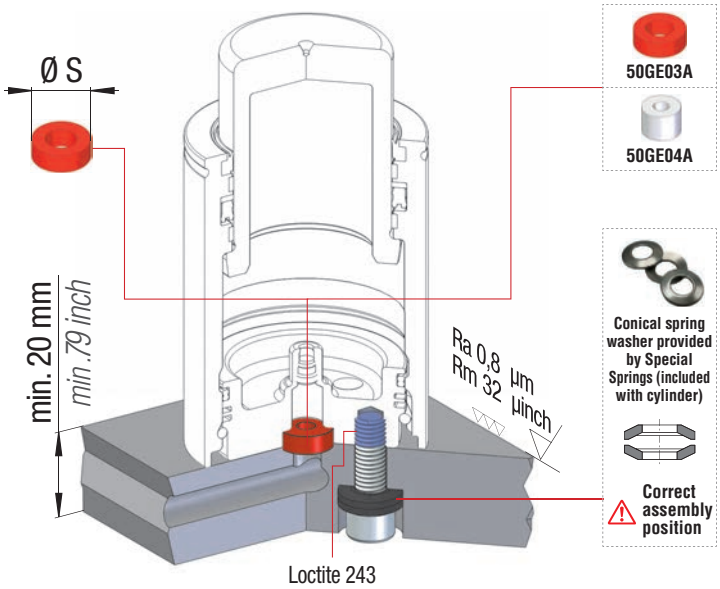

Example thread size M8 x 8

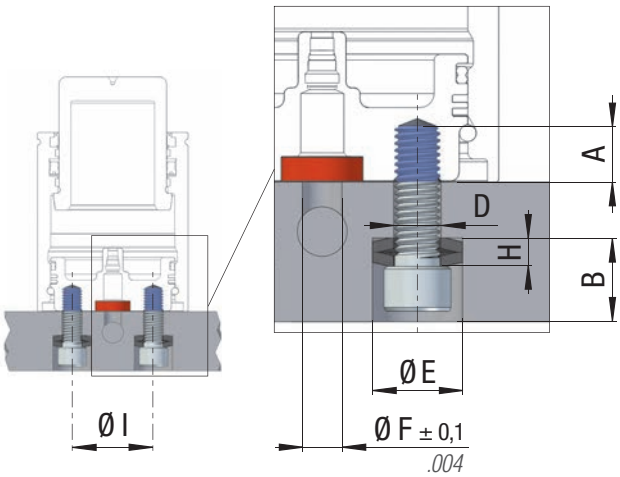

Ø I	D	A	B
Interasse fissaggio	Dimensione viti	Profondità filetti	Profondità lamatura
Fixing c.t.c. distance	Screw dimension	Thread depth	Depth of counterbore
Mittenabstand	Schraubengröße	Gewindetiefe	Senkungstiefe
Entraxe	Dimension vis	Profondeur filet	Profondeur du lamage
Distancia centros	Tamaño tornillos	Profundidad rosca	Profundidad del contrataladro
Distância eixos	Dimensão parafusos	Profundidade rosca	Profundida do alojamento

Ø E	Ø F	Ø S	H
Ø lamatura	Ø Foro piastra - cilindro	Ø Guarnizione piastra - cilindro	Spessore rosette
Ø counterbore	Ø Plate - Cylinder hole	Ø Plate - Cylinder seal	Thickness of washers
Ø Senkung	Ø Platten - Zylinder Loch	Ø Platten - Zylinder Dichtung	Dicke Sicherheitsscheiben
Ø lamage	Ø Trou plaque - cylindre	Ø Joint plaque - cylindre	Epaisseur des rondelles
Ø contrataladro	Ø Agujero Placa - Cilindro	Ø Junta Placa - Cilindro	Espesor de las arandelas
Ø alojamento	Ø Furo Placa - Cilindro	Ø Junta Placa - Cilindro	Espessura das arruelas

Sostituire viti di fissaggio e rosette coniche ogni 1.000.000 di cicli.
Replace fixing screws and conical spring washers every 1 million cycles.
Alle 1 Mio. Hübe Befestigungsschrauben und Sicherheitsscheiben austauschen.
Remplacez les vis de fixation et les rondelles coniques à chaque million de cycles.
Reemplazar los tornillos de fijación y las arandelas cónicas cada 1 millón de ciclos.
Substituir a cada 1 milhão de ciclos os parafusos e arreulas de segurança.

Model	Ø E mm	Ø E inch	B mm	B inch	H mm	H inch	Washer code for placement
ML 1000	≥ 10,25	≥ .40	≥ 9,15	≥ .36	3,15	.12	49RC06A
ML 1800	≥ 10,25	≥ .40	≥ 9,15	≥ .36	3,15	.12	49RC06A
ML 3000	≥ 17,3	≥ .68	≥ 12	≥ .47	4	.16	49RCHS08A
ML 4700	≥ 18,3	≥ .72	≥ 12	≥ .47	4	.16	49RC08A
ML 7500	≥ 18,3	≥ .72	≥ 12	≥ .47	4	.16	49RC08A
ML 12000	≥ 23,3	≥ .92	≥ 15	≥ .59	5	.20	49RC10A

FIXING PATTERN

α

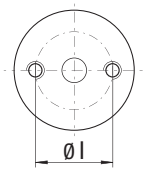

γ

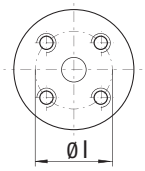

IT Corse e ingombri uguali al cilindro autonomo
EN Strokes and sizes same to selfcontained cylinder
DE Hüben und Abmessungen gleiche zu den Autonomen Gdf
FR Courses et ecombrement égaux à ceux du Cylindre autonome
ES Carreras y dimensiones iguales a las del cilindro autónomo
PT Cursos e dimensões iguais às do cilindro autonómo

NOTE

1
Modello con corpo liscio senza cave di fissaggio
Model with straight body without fixing grooves
Model mit flachem Körper ohne Befestigungsnuten
Modèle avec corps lisse sans encoches de fixation
Modelo con cuerpo parejo sin ranuras de fijación
Modelo com corpo liso sem ranhuras de fixação

2
Modello con corpo senza foro di caricamento laterale
Model with body without side charging port
Model mit Körper ohne Nebenladeloch
Modèle avec corps sans trou de charge latéral
Modelo con cuerpo sin hueco de carga
Modelo com corpo sem orifício de carregamen

Series	Model	Rev. code	Version	Fixing pattern	Thread size D	Ø F		Ø S		Seal code	Note
						mm	inch	mm	inch		
RV	170 *	C	E	ε	M6	5	0.20	14,5	0.57	50GE05A	2
RS	170 *	C	E	ε	M6	5	0.20	14,5	0.57	50GE05A	2
M	90 *	B	E	ε	M6	5	0.20	14,5	0.57	50GE05A	2
MS	90 *	B	E	ε	M6	5	0.20	14,5	0.57	50GE05A	2

* : sicurezza OSAS e OPAS non disponibile - Safety features OSAS and OPAS not available - Sicherheitsfeatures OSAS und OPAS nicht verfügbar - Dispositifs de sécurité OSAS et OPAS non disponibles - Dispositivos de seguridad OSAS y OPAS no disponibles - Dispositivos OSAS e OPAS não disponiveis

E version

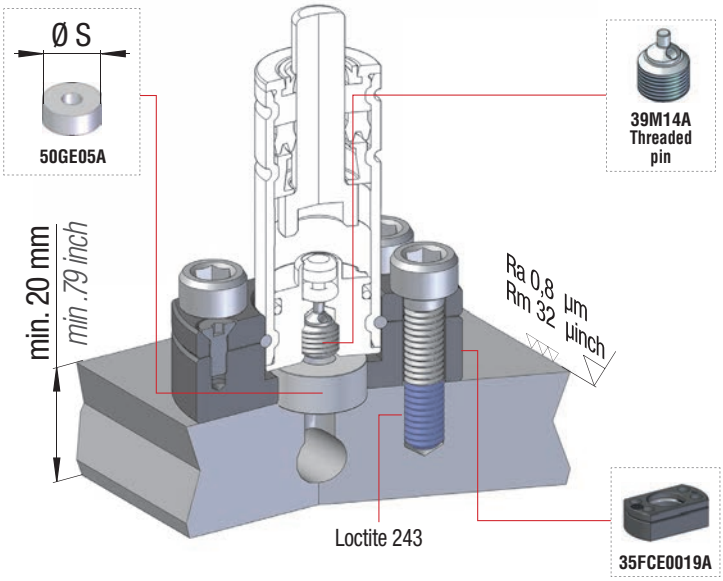

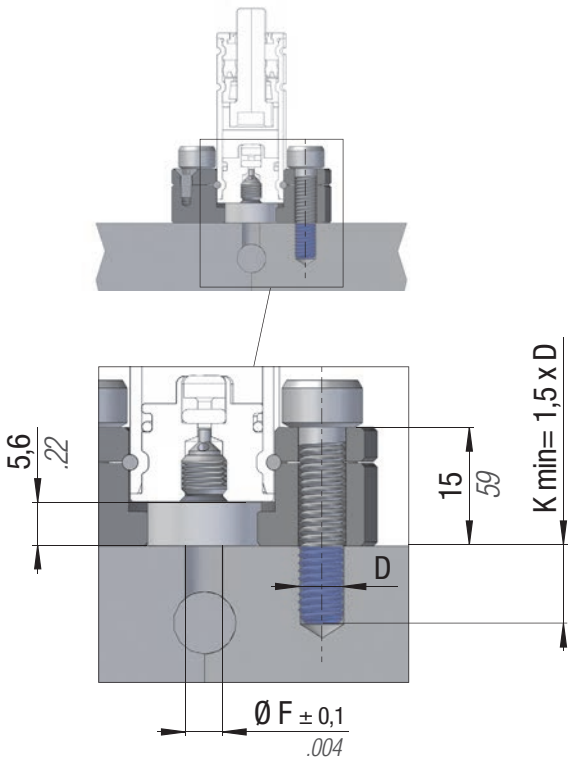

D	K min	Ø F	Ø S
Dimensione viti Screw dimension Schraubengröße Dimension vis Tamaño tornillos Dimensão parafusos	Minimo impegno viti Minimum thread engagement Mindest-Einschraublänge Longueur minimum à visser Recubrimiento mínimo rosca Comprimento minimo roscado	Ø Foro piastra - cilindro Ø Plate - Cylinder hole Ø Platten - Zylinder Loch Ø Trou plaque - cylindre Ø Agujero Placa - Cilindro Ø Furo Placa - Cilindro	Ø Guarnizione piastra - cilindro Ø Plate - Cylinder seal Ø Platten - Zylinder Dichtung Ø Joint plaque - cylindre Ø Junta Placa - Cilindro Ø Junta Placa - Cilindro

FIXING PATTERN

ε

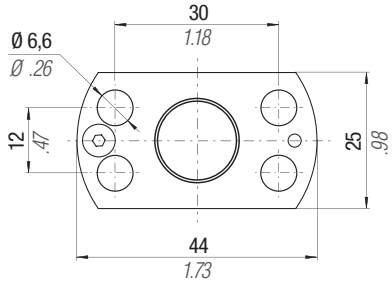

NOTE

1	Modello con corpo liscio senza cave di fissaggio Model with straight body without fixing grooves Model mit flachem Körper ohne Befestigungsnuten Modèle avec corps lisse sans encoches de fixation Modelo con cuerpo parejo sin ranuras de fijación Modelo com corpo liso sem ranhuras de fixação
2	Modello con corpo senza foro di caricamento laterale Model with body without side charging port Model mit Körper ohne Nebenladeloch Modèle avec corps sans trou de charge latéral Modelo con cuerpo sin hueco de carga Modelo com corpo sem orifício de carregamen

IT Corse uguali al cilindro autonomo
EN Strokes same to selfcontained cylinder
DE Hüben gleiche zu den Autonomen Gdf
FR Courses égaux à ceux du Cylindre autonome
ES Carreras iguales a las del cilindro autónomo
PT Cursos iguais às do cilindro autonómo

HOW TO ORDER

RV 750 - 050 - A - EV

- Series
- Model
- Stroke
- Revision code
- Version

IT Stato di fornitura

Tutti i cilindri Easy manifold e le coperture per i fori, sono forniti con guarnizione o nipplo e foglio di installazione.

EN Supply status

All the Easy manifold Cylinders and the hole covers, are supplied with square seal or nipple and installation guideline.

DE Lieferumfang

Alle Gasdruckfedern und Verschlussplatten für das Verbundplattensystem werden mit den nötigen Dichtungen / Verbindungsstücken und den Installationsrichtlinien ausgeliefert.

FR Etat de fourniture

Tous les vérins Easy Manifold et les couvertures pour les trous, sont fournis avec joint ou coupleur et feuille d'installation.

ES Estado de abastecimiento

Todos los cilindros Easy Manifold y coberturas para los agujeros, se abasteceran con junta o el Tetón y la hoja de instalación.

PT Estado de abastecimento

Todos os cilindros Easy Manifold e as capas para os buracos, são fornecidos com junta ou conector e folha de instalação.

EN easy manifold system

Series	Model	Revision code	Version	Fixing pattern	Thread size A x Pmin	Ø I mm	Ø I inch	Ø D mm	Ø D inch	Ø F mm	Ø F inch	Ø S mm	Ø S inch	Seal code	Note	Cover code > see pag 250
ML	1800	C	EN	γ	M6 x 8	26	1.02	-	-	8	0.31	-	-	39NMLNC	-	39TE003A
	3000				M8 x 8	34	1.34									39TE009A
	4700					40	1.57									39TE004A
	7500					52	2.05									39TE005A
	12000				M10 x 8	68	2.68									39TE006A

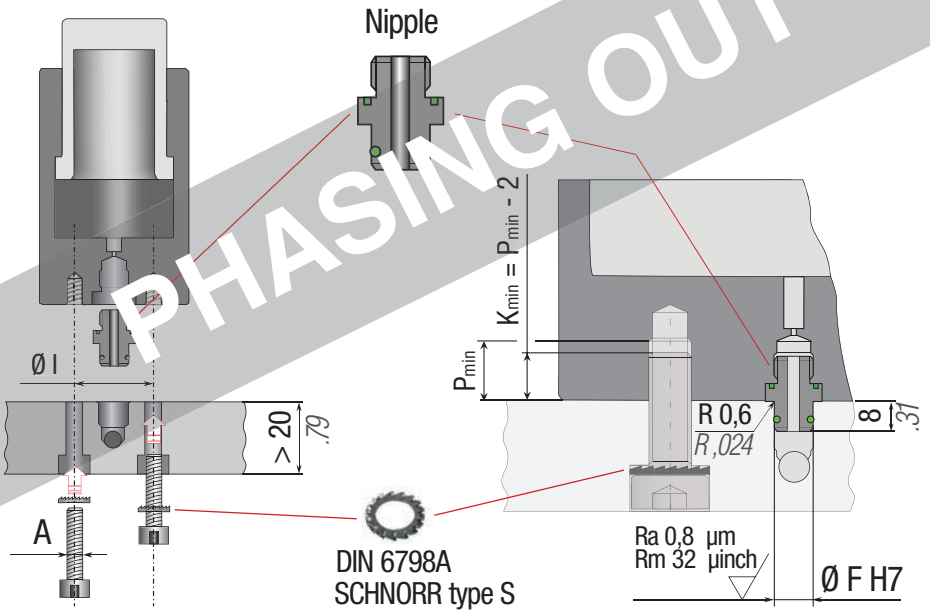

PHASING OUT

Easy manifold control panel

code 39CP01A

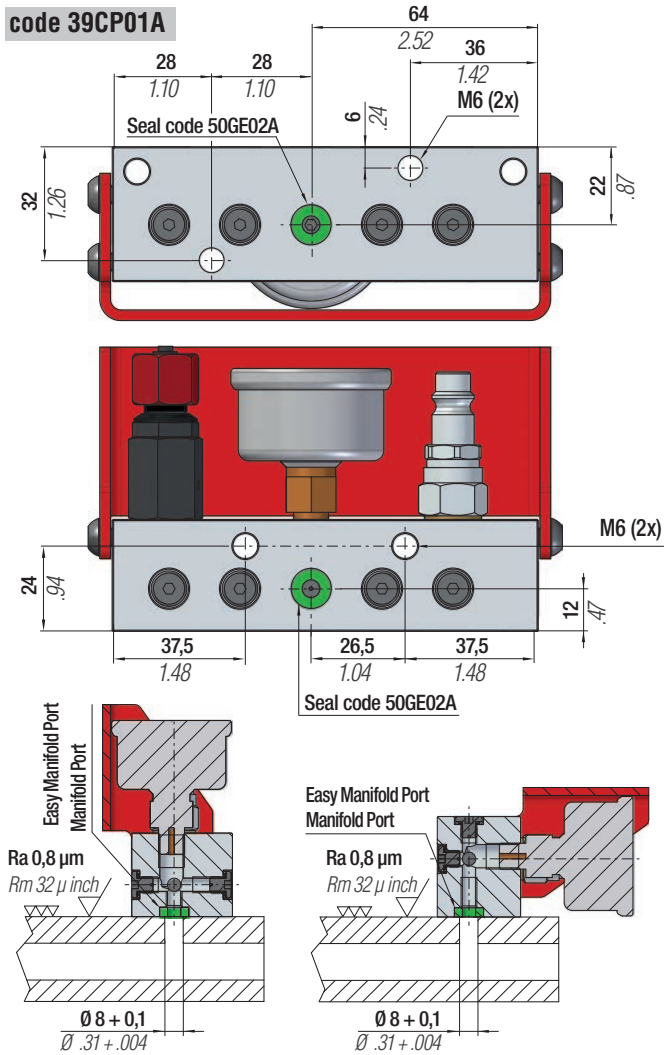

code 39CPVC

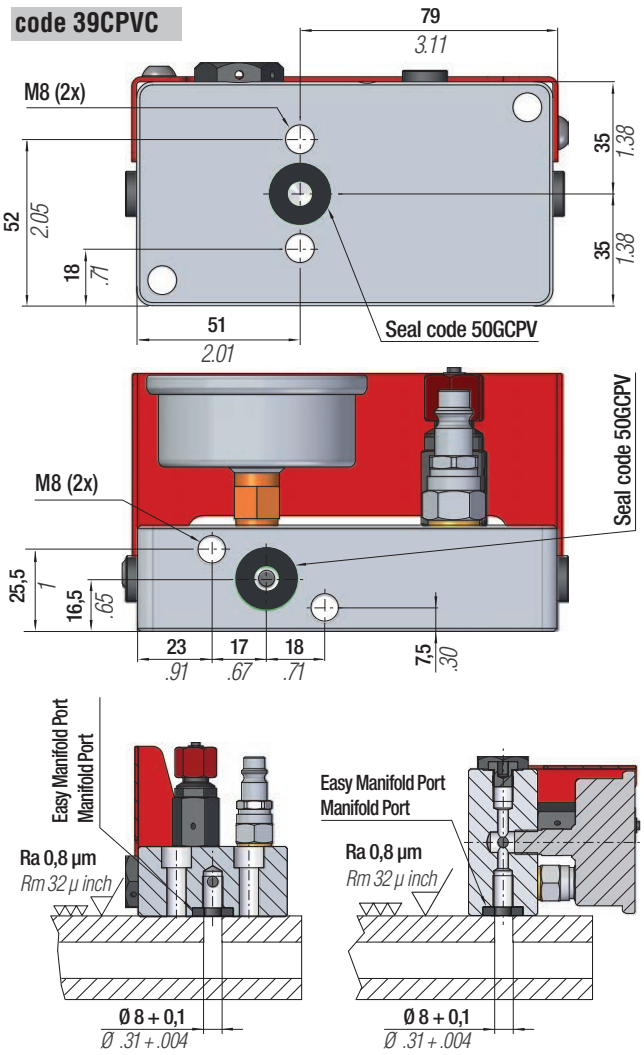

code 39MCPC

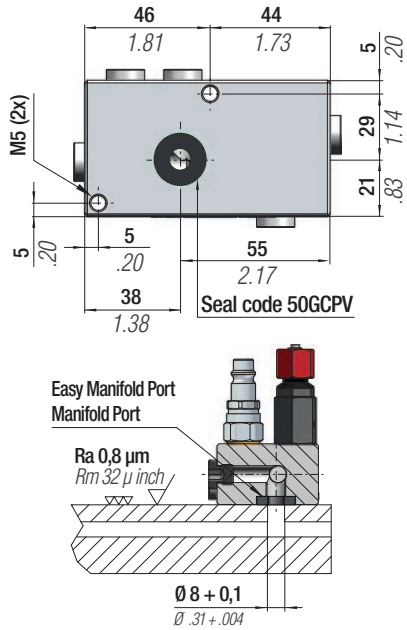

code 39CP14A

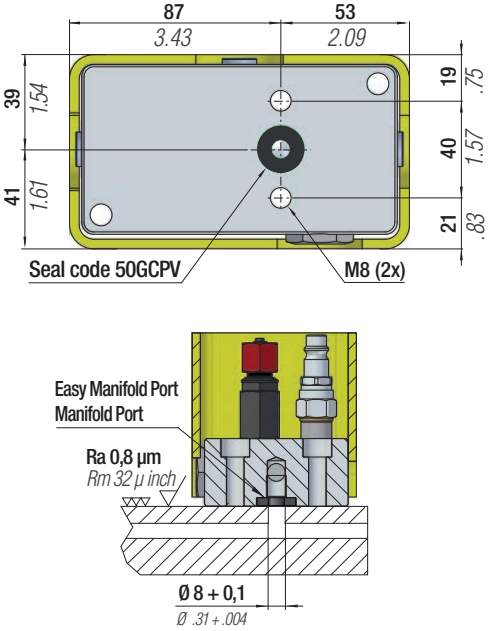

code 39CP07A

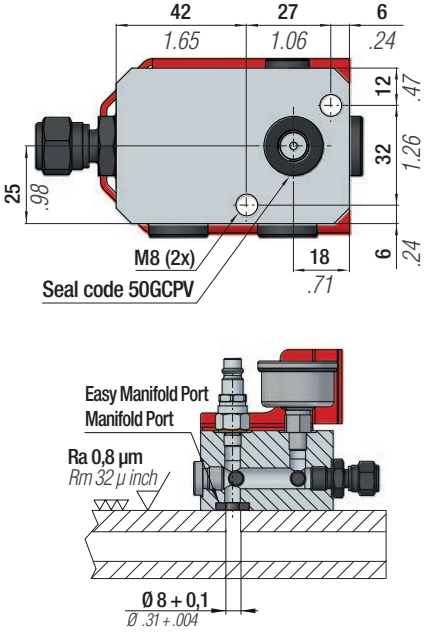

How to plug holes

IT Quando è richiesta una riduzione della forza del sistema, o del numero di cilindri, è possibile tappare i fori non utilizzati con una copertura dotata di guarnizione, che utilizza gli stessi fissaggi dei cilindri.

FR Quand une réduction de la force du système ou du nombre des vérins est requise, on peut boucher les trous qui ne sont pas utilisés, avec un couverture équipée avec un joint, qui utilise les mêmes trous de fixations des vérins.

EN When a reduction either of the system's force, or of the number of cylinders, is required, it is possible to plug the holes which are not used, with a cover provided with a square seal, through the same fixing hoses of the cylinders.

ES Quando se necesita de una reducción de la fuerza del sistema, o del número de cilindros, puede tapar los agujeros no utilizados con una cobertura equipada de junta, que utiliza los mismos agujeros de los cilindros.

DE Mit den Verschlussplatten werden nicht benötigte Bohrungen verschlossen und abgedichtet. Dadurch können einzelne Gasdruckfedern aus einem System entfernt und Kräfte in einem bestimmten Bereich reduziert werden.

PT Quando você solicita uma redução na força do sistema, ou o número de cilindros, pode tapar os buracos não utilizados com uma tampa com vedação, que usa o mesmo buracos dos cilindros.

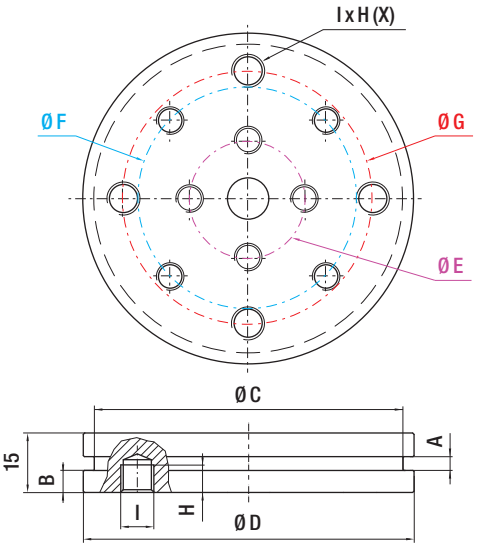

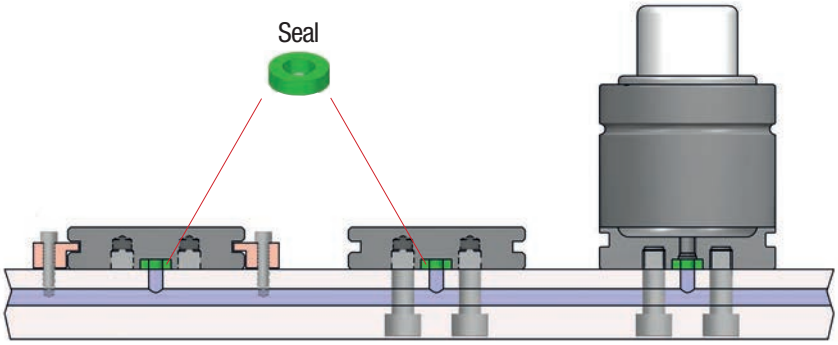

Code	A mm	A inch	B mm	B inch	Ø C mm	Ø C inch	Ø D mm	Ø D inch	Ø E mm	Ø E inch	Ø F mm	Ø F inch	Ø G mm	Ø G inch	I (x)	H mm	H inch	Seal Code	Fixing
39TE012A	3,5	0.14	4	0.16	27	1.06	32	1.26	18	0.71	-	-	-	-	M6 (2x)	10	0.39	50GE02A	FS2.. 32
39TE010A									20	0.79	24	0.94	-	-					
39TE001A					33	1.3	38	1.50	20	0.79	-	-	-	-	M6 (4x)				FS2.. 38
39TE011A					40	1.06	45	1.77			-	-	-	-	M8 (2x)				FS2.. 45
39TE002A					40	1.57			26	1.02	-	-	-	-	M8 (4x)			50GE01A	
39TE003A	5	0.20	8	0.31	43	1.69	50	1.97	26	1.02	-	-	-	-	M6 (4x)				FS2.. 50
									-	-	34	1.34	-	-	M8 (4x)				
39TE009A					56	2.2	63	2.48	34	1.34	-	-	-	-					FS2.. 63
39TE004A					67	2.64	75	2.95	40	1.57	-	-	-	-					FS2.. 75
									-	-	53,9	2.12	-	-	M12 (4x)				
39TE005A					87	3.43	95	3.74	52	2.05	60	2.36	-	-	M8 (4x)				FS2.. 95
									-	-	-	-	76,2	3.00	M12 (4x)				
39TE006A					112	4.41	120	4.72	80	3.15	-	-	68	2.68	M10 (4x)				FS2.. 120
									-	-	80,8	3.18	-	-	M12 (4x)				
39TE007A					142	5.59	150	5.91	100	3.94	-	-	90	3.54	M10 (4x)				FS2.. 150
									-	-	100	3.94	-	-	M12 (4x)				
39TE008A	8	0.31			187	7.36	195	7.68	120	4.72	-	-	-	-	M12 (4x)				FS2.. 195

Mounting recommendations

⚠ It is always required Loctite 243 or equivalent

Chiave dinamometrica
Torque wrench
Drehmomentschlüssel
Clé dynamométrique
Llave dinamométrica
Chave dinamométrica

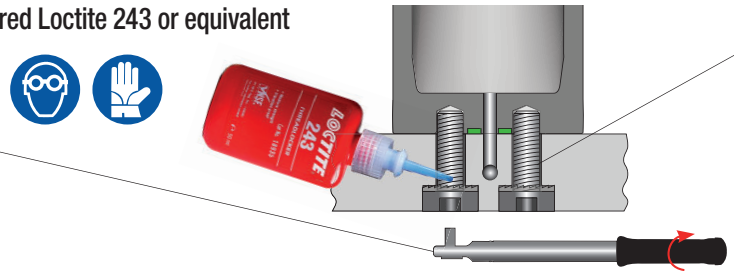

Torque force		
M6	class 8.8	max 10,4 Nm
M8	class 8.8	max 24,6 Nm
M10	class 8.8	max 52,4 Nm
M12	class 8.8	max 90 Nm

IT Raccomandazioni

- L' uso di viti di classe superiore alla 8.8, come 9.8, 10.9 e 12.9, é sempre possibile (questa indicazione non vale per gli ML, MP e MQ).
- Si raccomanda di NON SUPERARE i valori della coppia di serraggio indicati per la classe 8.8 per qualsiasi classe di viti utilizzata.
- Impegnare sempre il filetto il più possibile, almeno il valore di Kmin.
- Massima attenzione nel montaggio della guarnizione di collegamento tra cilindro e piastra.
- Utilizzare SEMPRE i fori di fissaggio previsti.
- Massima attenzione alla corretta coppia di serraggio da applicare alle viti.
- Usare SEMPRE rondelle anti svitamento su cilindri e pannelli.
- Usare SEMPRE frena filetti tipo Loctite 243 su cilindri e pannelli.
- Non caricare il sistema Easy Manifold con pressione superiore alla massima consentita per specifico modello di cilindro.

EN Recommendations

- The use of screws of higher class than 8.8, such as 9.8, 10.9 and 12.9, is always allowed (this information is not valid for the Series ML, MP e MQ).
- DO NOT EXCEED the fixed values for torque force indicated for class 8.8, in any other class of screws used.
- ALWAYS engage thread as much as possible at least Kmin.
- Extreme caution when assembling the connecting seal between plate and cylinder.
- ALWAYS use the fixing holes provided.
- Extreme caution to tightening torque to be applied to screws.
- ALWAYS use lock washers on cylinders and panels.
- ALWAYS use thread lock LOCTITE 243 on cylinders and panels.
- Do not charge the easy manifold system over the maximum allowed pressure for each cylinder model.

DE Hinweise

- Schrauben mit einer Festigkeit von 8.8 verwenden. Höhere Festigkeitsklassen wie 9.8, 10.9 und 12.9 sind möglich (Diese Angabe gilt nicht für die Baureihen ML, MP und MQ).
- Das Drehmoment der Festigkeitsklasse 8.8 für andere Festigkeitsklassen nicht überschreiten.
- Die komplette Gewindelänge ausnutzen, mind. Kmin.
- Vorsicht bei der Montage der Dichtungen zwischen den Gasdruckfedern und der Platte.
- Äußerste Vorsicht bzgl. des korrekten Drehmoments beim Einschrauben.
- Alle Befestigungsgewinde verwenden.
- IMMER Sicherungsscheiben auf die Zylindern und Kontrollarmaturen, verwenden.
- IMMER eine Schraubensicherung wie z.B. Loctite 243 auf die Zylindern und Kontrollarmaturen, verwenden.
- Das Easy Manifold System nicht mit einem höheren Druck laden als dem, der speziell für das Modell der Gasdruckfeder empfohlen wirdw.

FR Reccomandacions

- L'usage de vis de classe supérieure au 8.8, tout comme 9.8, 10.9 et 12.9,est toujours possible (cette information n'est pas valable pour les séries ML, MP et MQ).
- N'EXCEDEZ PAS la valeur de la couple se serrage indiqués pour la classe 8.8 pour n'importe quelle autre classe de vis utilisée.
- Engager toujours le filetages plus que possible, et au moin Kmin.
- Une extrême vigilance est recommandée pour l'assemblage du joint entre la plaque et le vérin.
- Utiliser TOUJOURS les trous de fixation prévus.
- Bien veiller à appliquer le couple de serrage correct aux vis.
- TOUJOURS utiliser les rondelles de verrouillage avec les cylindres et les panneaux.
- TOUJOURS utiliser la colle frein filet LOCTITE 243 avec les cylindres et les panneaux.
- Ne pas charger le système manifold au delà de la pression autorisée pour chaque modèle de vérin.

ES Recomendaciones

- La utilización de los tornillos superiores a 8,8, como 9.8, 10.9 y 12.9, siempre es posible (esta indicación no se aplica a ML, MP y MQ).
- Le recomendamos que NO HAY QUE SUPERAR los valores de las especificaciones de torsión para tornillos de clase 8.8 utilizados para cualquier clase.
- Siempre enganchar la rosca tanto como sea posible, al menos para Kmin.
- Máxima atención en el montaje de la junta de conexión entre placa y cilindro.
- SIEMPRE use los agujeros de fijación previstos.
- Máxima atención al correcto par de torsión que se aplica a los tornillos.
- Utilizar SIEMPRE arandelas autoblocantes por los cilindros y paneles.
- Utilizar SIEMPRE fijador de rosca tipo Loctite 243 por los cilindros y paneles.
- No cargar el sistema Easy Manifold con preción superior a la máxima permitida para cada tipo de cilindro.

PT Recomendações

- O uso de limitadores superiores a 8,8, tal como 9,8, 10,9 e 12,9, é sempre possível (não valido para as linhas ML, MP e MQ).
- Recomendamos que você NÃO ULTRAPASSE os valores das especificações de torque para a classe 8,8 por os limitadores utilizados para qualquer classe.
- Sempre envolver a rosca, tanto quanto possÌvel, pelo menos para Kmin.
- Máxima atenção quando fixar os vedantes conectores entre a placa e cilindro.
- Use SEMPRE os furos de fixação fornecidos.
- Máxima atenção no torque de aperto aplicado nos parafuso.
- Utilizar SEMPRE as anilhas de travamento nos cilindros e painéis.
- Utilizar SEMPRE o fixador de rosca LOCTITE 243 nos cilindros e painéis.
- Não carregar o sistema EASY MANIFOLD acima da pressão máxima recomendada para cada modelo de cilindro.

MANIFOLD SYSTEM

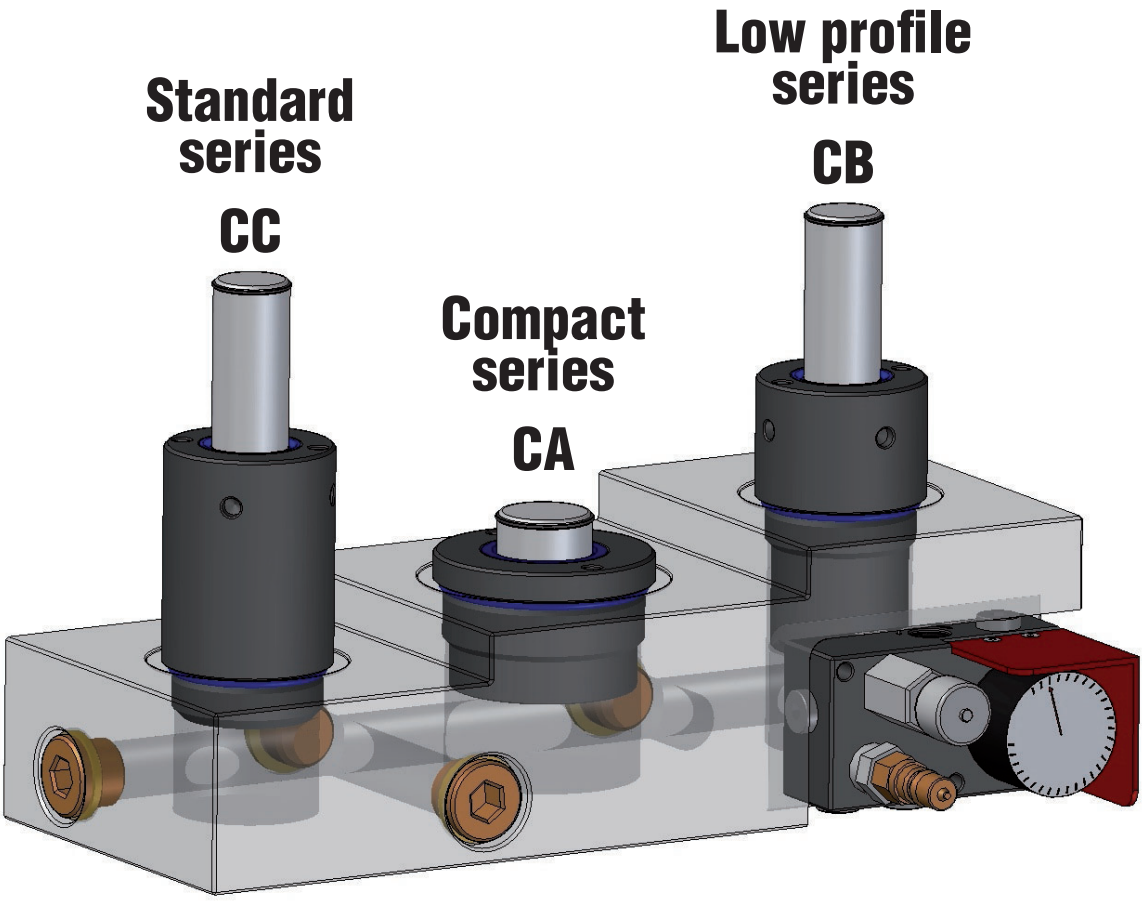

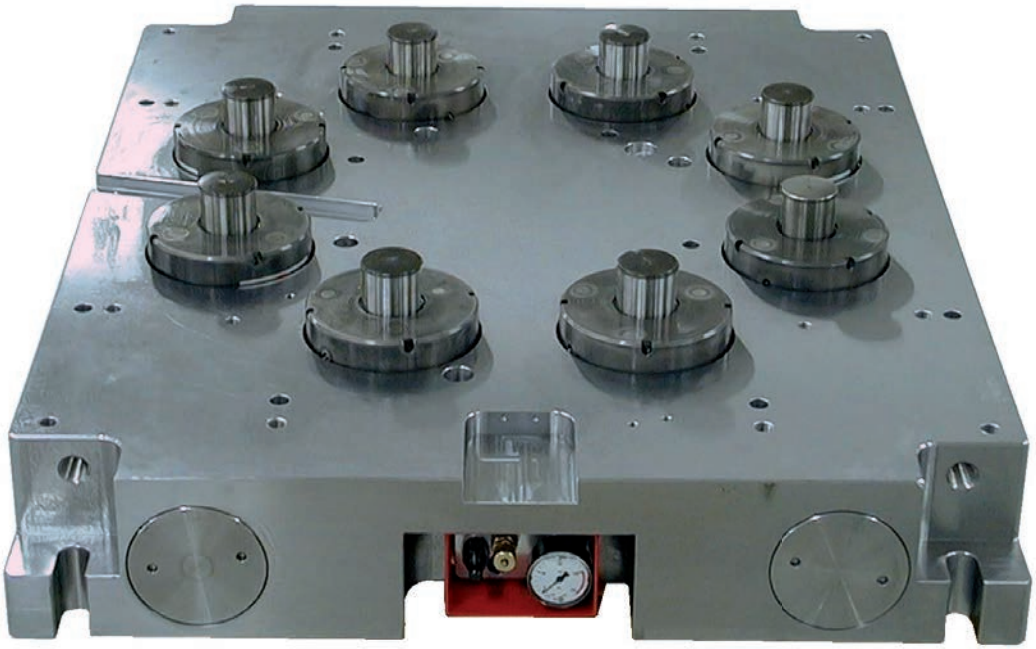

MANIFOLD SYSTEM

IT SISTEMA MANIFOLD

- Alternativa ai cilindri autonomi collegati
- Minimo incremento di pressione e forza
- Minimo ingombro
- Assenza di tubi e raccordi
- Grandi forze concentrate
- Monitoraggio e modifica della pressione facilitati attraverso il pannello di controllo
- Facilità di montaggio
- Facilità di manutenzione
- Lunga durata

CARATTERISTICHE TECNICHE

- Cilindri con tenuta pistone
- Raschiatore di protezione da contaminanti
- Doppia guida autolubrificata
- Corpo cilindro nitrurato con durezza ~ Hv 700
- Corpo cilindro lappato con rugosità ~ Ra ≤ 0,05 µ
- Stelo pistone nitrurato con durezza ~ Hv 700
- Stelo pistone lappato con rugosità ~ Ra ≤ 0,05 µ
- Pressione massima di caricamento 110 bar a 20°C
- Pressione minima di caricamento 30 bar a 20°C
- Velocità massima 0,6 m/sec
- Progettati in conformità alla Direttiva PED 2014/68/EU e EN 13445:2015

DE TANKPLATTENSYSTEM

- Alternativ zu Gasdruckfedern in Verbundanordnung
- Sehr geringer Druck- bzw. Kraftanstieg
- Kleine Einbauabmessungen
- Keine Schlauchverbindungen nötig
- Hohe Kräfte auf engstem Raum
- Einfache Überwachung und Druckänderung über Kontrollarmatur
- Leichte Montage
- Einfache Wartung
- Lange Lebensdauer

TECHNISCHE DATEN

- Gasdruckfedern mit Kolbendichtung
- Schmutzabstreifer
- Doppelte selbstschmierende Führung
- Nitrierter Zylinderkörper, Härte ~ Hv 700
- Geläppter Zylinderkörper, Rauigkeit ~ Ra ≤ 0,05 µ
- Kolbenstange nitriert, Härte ~ Hv 700
- Geläppte Kolbenstange, Rauigkeit ~ Ra ≤ 0,05 µ
- Max. Fülldruck 110 bar bei 20 °C
- Min. Fülldruck 30 bar bei 20 °C
- Max. Kolbengeschwindigkeit 0,6 m/s
- Konstruktion nach Druckgeräterichtlinie PED 2014/68/EU und EN 13445:2015

ES SISTEMA MANIFOLD

- Alternativa a los cilindros autónomos conectados
- Incremento mínimo de presión y fuerza
- Dimensiones mínimas
- Ausencia de tubos y conectores
- Concentración de grandes fuerzas
- Monitorización y modificación de la presión asignada a través del panel de control
- Facilidad de montaje
- Facilidad de mantenimiento
- Larga vida útil

CARACTERÍSTICAS TÉCNICAS

- Cilindros con guarnición en el pistón
- Escudo protector de agentes externos contaminantes
- Doble guía autolubrificada
- Cuerpo del cilindro nitrurado con dureza ~ Hv 700
- Cuerpo del cilindro lapeado con rugosidad ~ Ra ≤ 0,05µ
- Vástago nitrurado con dureza ~ Hv 700
- Vástago lapeado con rugosidad ~ Ra ≤ 0,05µ
- Presión máxima de carga 110 bar a 20ºC
- Presión mínima de carga 30 bar a 20ºC
- Velocidad máxima 0,6m/s
- Diseñados de acuerdo a la Directiva PED 2014/68/EU y EN 13445:2015

EN MANIFOLD SYSTEM

- Alternative choice to hose system
- Low increase of force and pressure
- Minimal heights
- No hoses and/or fittings
- Highest force in the minimum space
- Easy check and charge of pressure through the panel
- Easy mounting
- Easy maintenance
- Long lasting

TECHNICAL FEATURES

- Piston sealed cylinders
- Rod wiper against contaminants
- Double self lubricating guiding elements
- Nitred body with hardness of ~ Hv 700
- Lapped body with roughness of ~ Ra ≤ 0,05 µ
- Nitred piston rod with hardness of ~ Hv 700
- Lapped piston rod with roughness of ~ Ra ≤ 0,05 µ
- Maximum charging pressure 110 bar a 20°C
- Minimum charging pressure 30 bar a 20°C
- Maximum speed 0,6 m/sec
- In compliance with PED 2014/68/EU and EN 13445:2015 Directive

FR SYSTÈME MULTIPLE

- Solution alternative au système interconnecté par tuyaux
- Faible augmentation de la force et de la pression
- Hauteurs minimales
- Utilisation d'aucun tuyau ni adaptateur
- Force maximale pour un encombrement minimum
- Vérification aisée de la pression et rechargement facilité grâce au dispositif de gonflage
- Montage facile
- Maintenance facilitée
- Longévité optimale

CARACTÉRISTIQUES TECHNIQUES

- Vérins avec joint de piston
- Dévêtisseur protégeant de la poussière et de tous contaminants
- Doubles éléments de guidage auto-lubrifiants
- Corps trempé à ~Hv 700
- Corps rodé avec rugosité de ~Ra <=0.05µ
- Piston nitruré, dureté de ~Hv 700
- Piston rodé avec rugosité de ~Ra <=0.05µ
- Pression de charge maximale 110 bar à 20°C
- Pression de charge minimale 30 bar à 20°C
- Vitesse maximale 0.6 m/sec
- Conformément à la directive PED2014/68/EU er EN 13445:2015

PT SISTEMA MANIFOLD

- Alternativa aos cilindros autónomos interligados
- Incremento mínimo de pressão e força
- Mínimo espaço
- Ausência de tubos e "racords"
- Grande força concentrada
- Monitorização e modificação da pressão facilitada através do painel de controlo
- De fácil montagem
- De fácil manutenção
- Longa duração

CARACTERÍSTICAS TÉCNICAS

- Cilindros com estanquidade do êmbolo
- Raspador para protecção contra contaminantes
- Duplo guiamento autolubrificado
- Corpo do cilindro nitrurado com dureza - Hv 700
- Corpo do cilindro polido com rugosidade ~Ra ≤ 0,05 µ
- Êmbolo nitrurado com dureza - Hv 700
- Êmbolo polido com rugosidade ~Ra ≤ 0,05 µ
- Pressão máxima de carregamento 110 bar a 20ºC
- Pressão mínima de carregamento 30 bar a 20ºC
- Velocidade máxima 0,6 m/s
- Projectados em conformidade com a Directiva PED 2014/68/EU e EN 13445:2015

CA 2500

PED 2014/68/EU

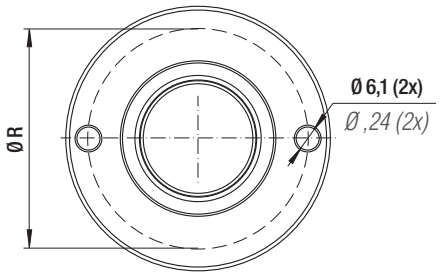

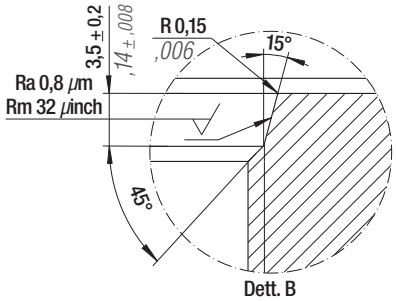

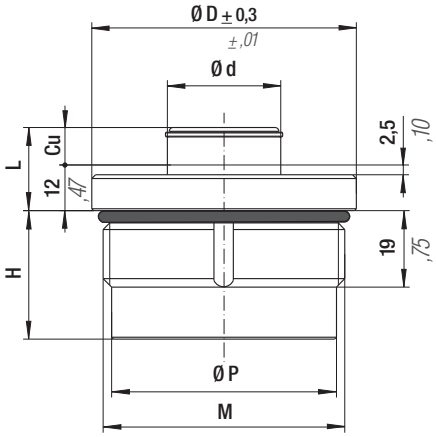

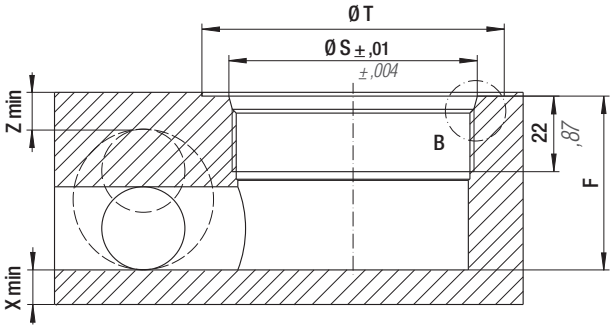

Max Speed			P max	P min	S		Maintenance kit
0,8 m/s		N2	110 bar / 1595 psi	20 bar / 290 psi	22,9 cm² / 3,55 in²		39BMCA02500A

MODEL	Fo daN	Fo lb	M	Cu mm	Cu inch	L mm	L inch	H mm	H inch	Ø D mm	Ø D inch	Ø d mm	Ø d inch	Ø P mm	Ø P inch	Ø R mm	Ø R inch	Ø T mm	Ø T inch	Ø S mm	Ø S inch	F mm	F inch	Xmin mm	Xmin inch	Zmin mm	Zmin inch
CA 2500 - 006 - A	2520	5665	M 64 X 2	6	0.24	18	0.71	30	1.18	70	2.76	30	1.18	59,5	2.34	58	2.28	80	3.15	65,9	2.59	33	1.30	10	0.39	8	0.31
CA 2500 - 010 - A	2520	5665	M 64 X 2	10	0.39	22	0.87	34	1.34	70	2.76	30	1.18	59,5	2.34	58	2.28	80	3.15	65,9	2.59	37	1.46	10	0.39	8	0.31
CA 2500 - 015 - A	2520	5665	M 64 X 2	15	0.59	27	1.06	39	1.54	70	2.76	30	1.18	59,5	2.34	58	2.28	80	3.15	65,9	2.59	42	1.65	10	0.39	8	0.31
CA 2500 - 020 - A	2520	5665	M 64 X 2	20	0.79	32	1.26	44	1.73	70	2.76	30	1.18	59,5	2.34	58	2.28	80	3.15	65,9	2.59	47	1.85	10	0.39	8	0.31

CB 1000

PED 2014/68/EU

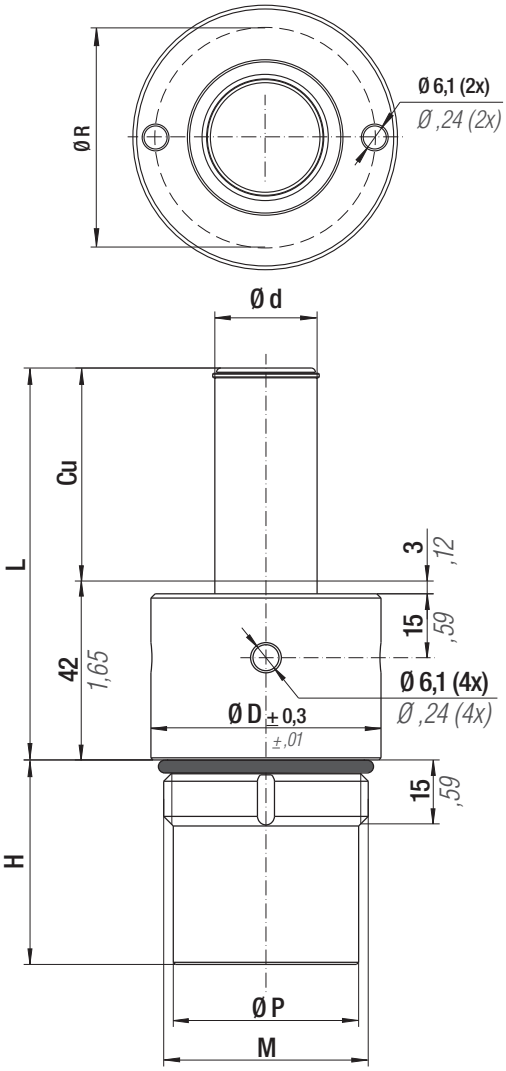

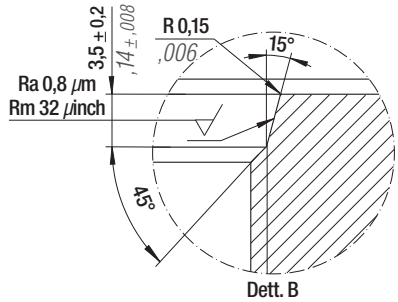

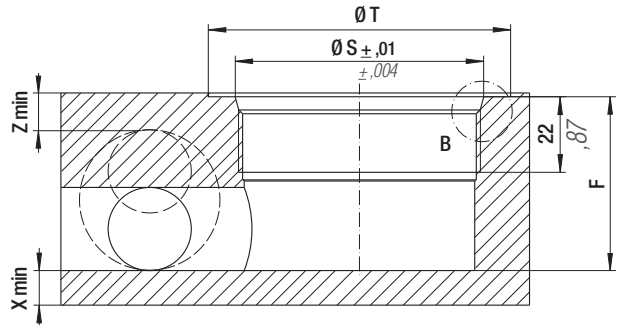

Max Speed			P max	P min	S		Maintenance kit	
0,8 m/s		N2	110 bar 1595 psi	20 bar 290 psi	9,62 cm² 1,49 in²		39BMCC01000A	

MODEL	Fo		M	Cu		L		H		Ø D		Ø d		Ø P		Ø R		Ø T		Ø S		F		Xmin		Zmin	
	daN	lb		mm	inch	mm	inch	mm	inch	mm	inch	mm	inch	mm	inch	mm	inch	mm	inch	mm	inch	mm	inch	mm	inch	mm	inch
CB 1000 - 025 - A	1060	2383	M 48 X 2	25	0.98	67	2.64	23	0.91	54	2.13	24	0.95	43,5	1.71	44	1.73	64	2.52	49,9	1.97	26	1.02	10	0.39	8	0.31
CB 1000 - 038 - A	1060	2383	M 48 X 2	38	1.50	80	3.15	36	1.42	54	2.13	24	0.95	43,5	1.71	44	1.73	64	2.52	49,9	1.97	39	1.54	10	0.39	8	0.31
CB 1000 - 050 - A	1060	2383	M 48 X 2	50	1.97	92	3.62	48	1.89	54	2.13	24	0.95	43,5	1.71	44	1.73	64	2.52	49,9	1.97	51	2.01	10	0.39	8	0.31
CB 1000 - 075 - A	1060	2383	M 48 X 2	75	2.95	117	4.61	73	2.87	54	2.13	24	0.95	43,5	1.71	44	1.73	64	2.52	49,9	1.97	76	2.99	10	0.39	8	0.31
CB 1000 - 100 - A	1060	2383	M 48 X 2	100	3.94	142	5.59	98	3.86	54	2.13	24	0.95	43,5	1.71	44	1.73	64	2.52	49,9	1.97	101	3.98	10	0.39	8	0.31
CB 1000 - 150 - A	1060	2383	M 48 X 2z	150	5.91	192	7.56	148	5.83	54	2.13	24	0.95	43,5	1.71	44	1.73	64	2.52	49,9	1.97	151	5.94	10	0.39	8	0.31

MANI FOLD

CB 2500

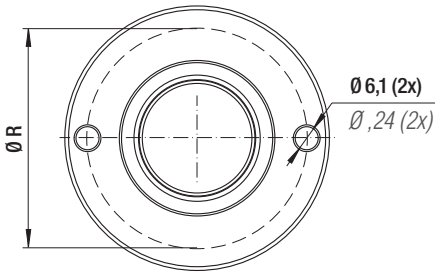

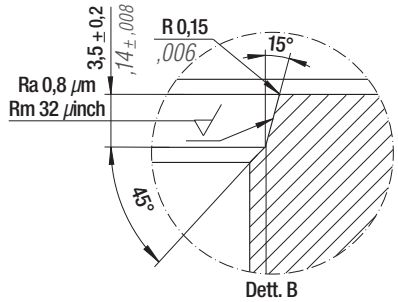

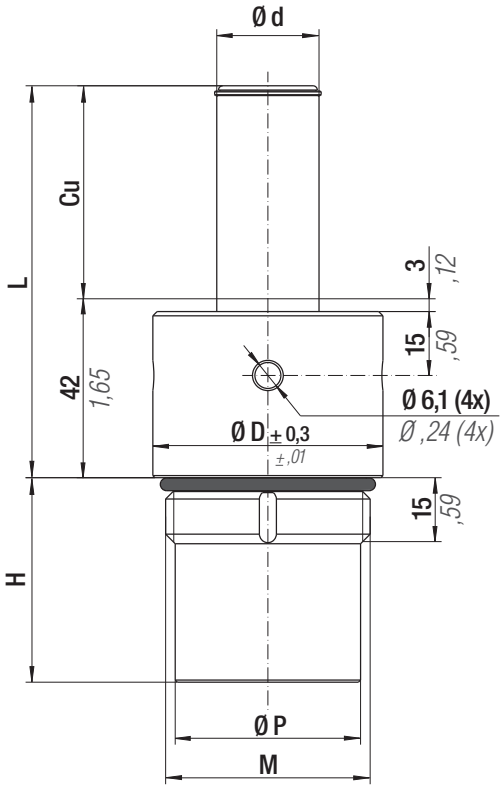

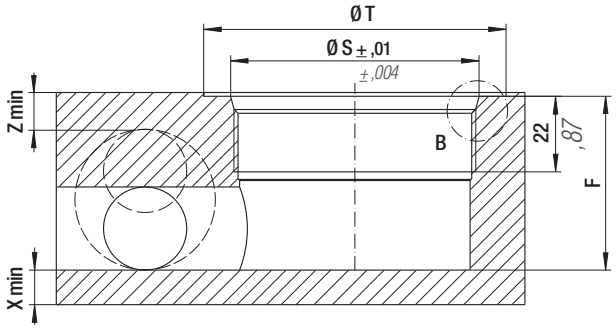

Max Speed	°F	°C		P max	P min	S		Maintenance kit
0,8 m/s	32 - 176	0 - 80	N_2	110 bar / 1595 psi	20 bar / 290 psi	22,9 cm² / 3,55 in²		39BMCB02500A

MODEL	Fo daN	Fo lb	M	Cu mm	Cu inch	L mm	L inch	H mm	H inch	Ø D mm	Ø D inch	Ø d mm	Ø d inch	Ø P mm	Ø P inch	Ø R mm	Ø R inch	Ø T mm	Ø T inch	Ø S mm	Ø S inch	F mm	F inch	Xmin mm	Xmin inch	Zmin mm	Zmin inch
CB 2500 - 025 - A	2520	5665	M 64 X 2	25	0.98	67	2.64	23	0.91	70	2.76	30	1.18	59,5	2.34	58	2.28	80	3.15	65,9	2.59	26,0	1.02	10	0.39	8	0.31
CB 2500 - 038 - A	2520	5665	M 64 X 2	38	1.5	80	3.15	36	1.42	70	2.76	30	1.18	59,5	2.34	58	2.28	80	3.15	65,9	2.59	39,0	1.54	10	0.39	8	0.31
CB 2500 - 050 - A	2520	5665	M 64 X 2	50	1.97	92	3.62	48	1.89	70	2.76	30	1.18	59,5	2.34	58	2.28	80	3.15	65,9	2.59	51,0	2.01	10	0.39	8	0.31
CB 2500 - 075 - A	2520	5665	M 64 X 2	75	2.95	117	4.61	73	2.87	70	2.76	30	1.18	59,5	2.34	58	2.28	80	3.15	65,9	2.59	76,0	2.99	10	0.39	8	0.31
CB 2500 - 100 - A	2520	5665	M 64 X 2	100	3.94	142	5.59	98	3.86	70	2.76	30	1.18	59,5	2.34	58	2.28	80	3.15	65,9	2.59	101,0	3.98	10	0.39	8	0.31
CB 2500 - 150 - A	2520	5665	M 64 X 2	150	5.91	192	7.56	148	5.83	70	2.76	30	1.18	59,5	2.34	58	2.28	80	3.15	65,9	2.59	151,0	5.94	10	0.39	8	0.31

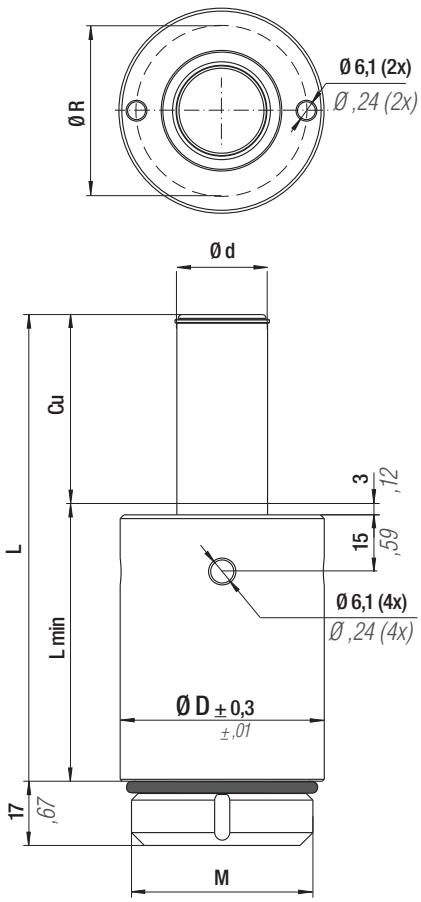

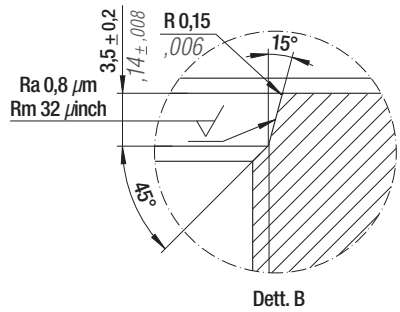

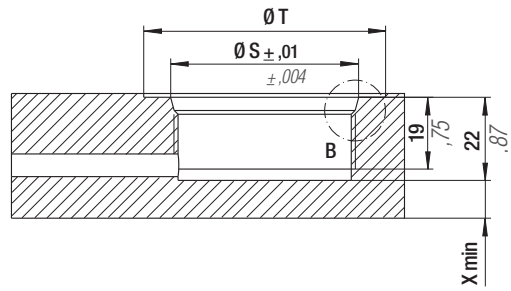

Max Speed	°F	°C		P max	P min	S		Maintenance kit
0,8 m/s	32 - 176	0 - 80	N2	110 bar / 1595 psi	20 bar / 290 psi	4,90 cm² / 0,76 in²		39BMCC00500A

MODEL	Fo		M	Cu		L		L min		Ø D		Ø d		Ø R		Ø T		Ø S		Xmin	
	daN	lb		mm	inch	mm	inch	mm	inch	mm	inch	mm	inch	mm	inch	mm	inch	mm	inch	mm	inch
CC 0500 - 012 - A	540	1214	M 36 X 2	12,5	0.49	45,5	1.79	33,0	1.30	42	1.65	12	0.47	32	1.26	52	2.05	37,9	1.49	6	0.24
CC 0500 - 025 - A	540	1214	M 36 X 2	25	0.98	70,5	2.78	45,5	1.79	42	1.65	12	0.47	32	1.26	52	2.05	37,9	1.49	6	0.24
CC 0500 - 038 - A	540	1214	M 36 X 2	38	1.50	96,5	3.80	58,5	2.30	42	1.65	12	0.47	32	1.26	52	2.05	37,9	1.49	6	0.24
CC 0500 - 050 - A	540	1214	M 36 X 2	50	1.97	120,5	4.74	70,5	2.78	42	1.65	12	0.47	32	1.26	52	2.05	37,9	1.49	6	0.24
CC 0500 - 075 - A	540	1214	M 36 X 2	75	2.95	170,5	6.71	95,5	3.76	42	1.65	12	0.47	32	1.26	52	2.05	37,9	1.49	6	0.24
CC 0500 - 100 - A	540	1214	M 36 X 2	100	3.94	220,5	8.68	120,5	4.74	42	1.65	12	0.47	32	1.26	52	2.05	37,9	1.49	6	0.24

MANI FOLD

CC 1000

PED 2014/68/EU

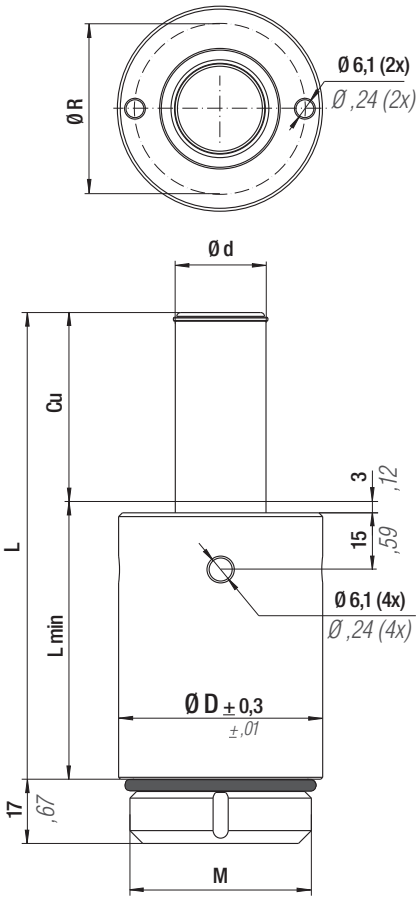

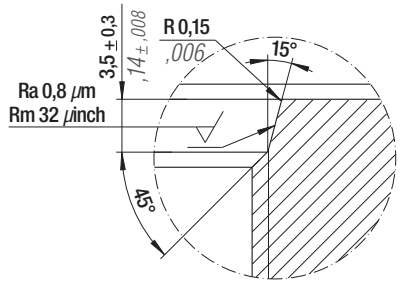

Dett. B

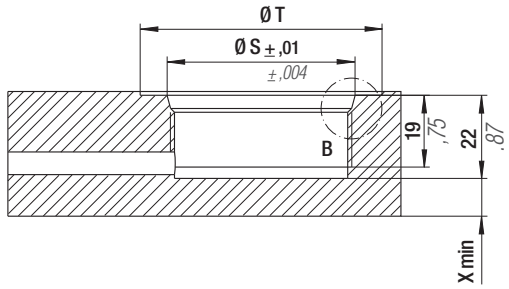

Max Speed	°F	°C		P max	P min	S		Maintenance kit
0,8 m/s	32 - 176	0 - 80	N_2	110 bar / 1595 psi	20 bar / 290 psi	9,62 cm² / 1,491 in²		39BMCC01000A

MODEL	Fo daN	Fo lb	M	Cu mm	Cu inch	L mm	L inch	L min mm	L min inch	Ø D mm	Ø D inch	Ø d mm	Ø d inch	Ø R mm	Ø R inch	Ø T mm	Ø T inch	Ø S mm	Ø S inch	Xmin mm	Xmin inch
CC 1000 - 025 - A	1060	2383	M 48 X 2	25	0.98	73,5	2.89	48,5	1.91	54	2.13	24	0.95	44	1.73	64	2.52	49,9	1.97	10	0.39
CC 1000 - 038 - A	1060	2383	M 48 X 2	38	1.50	99,5	3.92	61,5	2.42	54	2.13	24	0.95	44	1.73	64	2.52	49,9	1.97	10	0.39
CC 1000 - 050 - A	1060	2383	M 48 X 2	50	1.97	123,5	4.86	73,5	2.89	54	2.13	24	0.95	44	1.73	64	2.52	49,9	1.97	10	0.39
CC 1000 - 075 - A	1060	2383	M 48 X 2	75	2.95	173,5	6.83	98,5	3.88	54	2.13	24	0.95	44	1.73	64	2.52	49,9	1.97	10	0.39
CC 1000 - 100 - A	1060	2383	M 48 X 2	100	3.94	223,5	8.80	123,5	4.86	54	2.13	24	0.95	44	1.73	64	2.52	49,9	1.97	10	0.39
CC 1000 - 150 - A	1060	2383	M 48 X 2	150	5.91	323,5	12.74	173,5	6.83	54	2.13	24	0.95	44	1.73	64	2.52	49,9	1.97	10	0.39

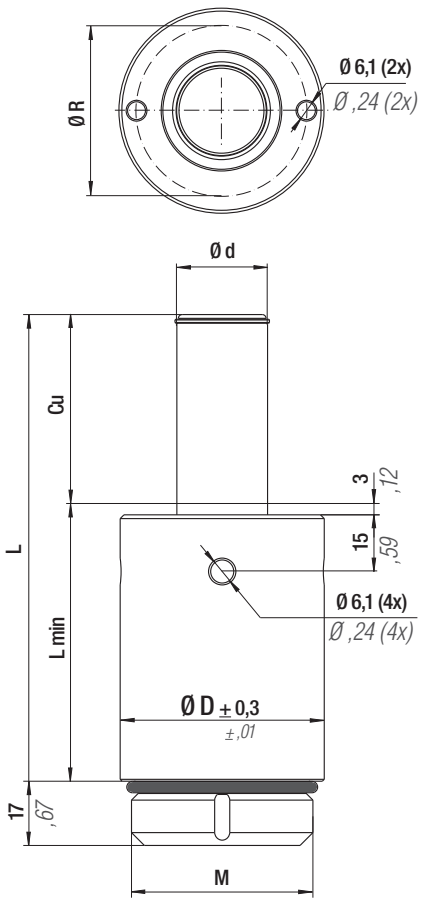

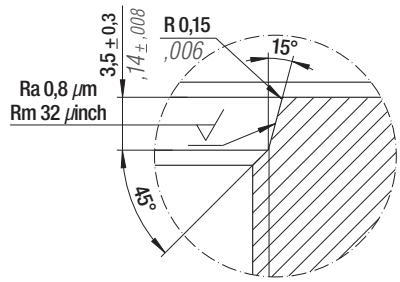

Dett. B

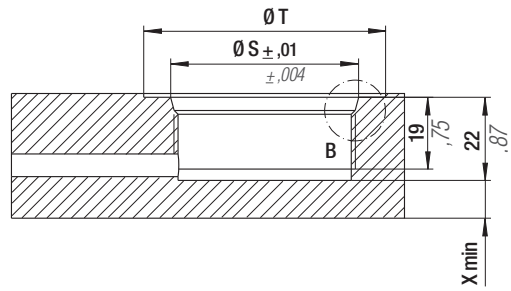

Max Speed	°F	°C		P max	P min	S		Maintenance kit
0,8 m/s	32 - 176	0 - 80	N_2	110 bar / 1595 psi	20 bar / 290 psi	22,9 cm² / 3,55 in²		39BMCB02500A

MODEL	Fo		M	Cu		L		L min		Ø D		Ø d		Ø R		Ø T		Ø S		Xmin	
	daN	lb		mm	inch	mm	inch	mm	inch	mm	inch	mm	inch	mm	inch	mm	inch	mm	inch	mm	inch
CC 2500 - 025 - A	2520	5665	M 64 X 2	25	0.98	73,5	2.89	48,5	1.91	70	2.76	30	1.18	58	2.28	80	3.15	65,9	2.59	10	0.39
CC 2500 - 038 - A	2520	5665	M 64 X 2	38	1.50	99,5	3.92	61,5	2.42	70	2.76	30	1.18	58	2.28	80	3.15	65,9	2.59	10	0.39
CC 2500 - 050 - A	2520	5665	M 64 X 2	50	1.97	123,5	4.86	73,5	2.89	70	2.76	30	1.18	58	2.28	80	3.15	65,9	2.59	10	0.39
CC 2500 - 075 - A	2520	5665	M 64 X 2	75	2.95	173,5	6.83	98,5	3.88	70	2.76	30	1.18	58	2.28	80	3.15	65,9	2.59	10	0.39
CC 2500 - 100 - A	2520	5665	M 64 X 2	100	3.94	223,5	8.80	123,5	4.86	70	2.76	30	1.18	58	2.28	80	3.15	65,9	2.59	10	0.39
CC 2500 - 150 - A	2520	5665	M 64 X 2	150	5.91	323,5	12.74	173,5	6.83	70	2.76	30	1.18	58	2.28	80	3.15	65,9	2.59	10	0.39

MANI FOLD

SW - SECONDARY WIPER

IT Oltre alla protezione SKUDO installata come standard sulle serie KE, RS ed MS, Special Springs offre una completa gamma di raschiatori secondari per migliorare le prestazioni dei cilindri a gas utilizzati in ambienti molto contaminati.
I nuovi raschiatori secondari in poliuretano sono progettati per un perfetto fitting con i vari modelli di cilindri. Vedi le tabelle per i dati tecnici.
I raschiatori secondari sono ordinabili separatamente dal cilindro e installabili dall'utilizzatore o, se richiesti al momento dell'ordine, installati direttamente in fabbrica da Special Springs.

EN In addition to the SKUDO protection, which is standard on series KE, RS and MS, Special Springs offers a complete range of secondary wipers to improve performances of nitrogen cylinders used in heavy contamined environments.
The new secondary wipers, made in polyurethane, are designed for a perfect fitting with many series of nitrogen cylinders. See the charts for technical data.
The secondary wipers can be ordered separately from the cylinders. They can be assembled by user or, if requested with the order, by Special Springs.

DE Neben dem SKUDO-Schutz, der standardmäßig auf der Produktreihe KE, RS und MS installiert ist, bietet Special Springs ein komplettes Sortiment an Sekundärabstreifer zur Verbesserung der Leistungen von Gasdruckfedern, die in stark kontaminierten Umgebungen eingesetzt werden.
Die neuen Sekundärabstreifer, hergestellt aus Polyurethan, sind für eine perfekte Montage mit vielen Serien von Gasdruckfedern ausgelegt. Siehe die Tabelle für technische Daten.
Die Sekundärabstreifer können separat von den Gasdruckfedern bestellt und vom Anwender montiert werden oder, falls in der Bestellung gewünscht, werkseitig vormontiert von Special Springs.

FR En plus de la protection SKUDO installée en standard sur les séries KE, RS et MS, Special Springs offre une gamme complète de joints racleurs secondaires pour améliorer les performances des ressorts à gaz utilisés dans les environnements fortement contaminés.
Les nouveaux joints racleurs secondaires, fabriqués en polyuréthane, sont conçus pour une parfaite fixation avec de nombreuses séries de ressorts à gaz. Voir les tableaux pour les données techniques.
Les joints racleurs secondaires peuvent être commandés séparément des cylindres et assemblés par l'utilisateur ou, si demandé dans la commande, seront assemblés en usine par Special Springs.

ES Además de la protección SKUDO instalada como estándar en las series KE, RS y MS, Special Springs ofrece una gama completa de rascadores secundarios para mejorar las prestaciones de los cilindros de nitrógeno utilizados en entornos muy contaminados.
Los nuevos rascadores secundarios de poliuretano están diseñados para un ajuste perfecto con muchas series de cilindros de nitrógeno. Consulte las tablas para obtener información técnica.
Los rascadores secundarios se pueden pedir por separado de los cilindros y ser montados por el usuario o, si se solicita en el pedido, se montarán en la fábrica por Special Springs.

PT Além da protecção SKUDO instalada como padrão na série KE, RS e MS, Special Springs oferece uma gama completa de raspadores secundários para melhorar os desempenhos dos cilindros de nitrogênio utilizados em ambientes muito contaminados.
Os novos raspadores secundários, feitos de poliuretano, são projetados para um perfeito montagem com muitas séries de cilindros de nitrogênio. Veja a guia abaixo para obter dados técnicos.
Os raspadores secundários podem ser encomendados separadamente dos cilindros e montados pelo usuário ou, se solicitado com a ordem, serão montados na fábrica por Special Springs.

SW - SECONDARY WIPER

Cylinder Code	A mm	B mm	Secondary Wiper Code
M 300	2	4	59SW001
RV / RT 350	2	4	59SW002
RV / RT 500	2	4	59SW003
RV / RF / RG / RT 750	2	4	59SW004
RV / RF / RG / RT 1000	2	5	59SW005
RV / RF / RT 1200	2	5	59SW005
RV / RF / RG / RT 1500	2,5	5,5	59SW006
RV / RF / RG / RT 2400	2,5	5,5	59SW007
RV / RG / RT 4200	2,5	5,5	59SW008
RV / RG / RT 6600	2,5	5,5	59SW009
RV / RT 9500	3	6	59SW010
RV 12000	3	6	59SW011
RV 20000	3	6	59SW012
H 300	2	4	59SW002
H 500 / HF 500	2	4	59SW003
HT 500	2	4	59SW047
H 700	2	4	59SW004
HT 700	2	4	59SW048
H 1000	2	5	59SW005
HT 1000	2	5	59SW049
H 1500	2,5	5,5	59SW006
H 2400	2,5	5,5	59SW007

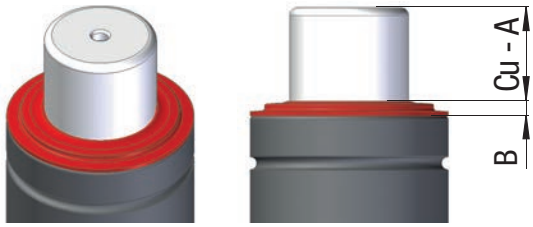

A = Nominal stroke reduction Cu = Nominal Stroke

Cylinder Code	A mm	B mm	Secondary Wiper Code
H 4200	2,5	5,5	59SW008
H 6600	2,5	5,5	59SW009
H 9500	3	6	59SW010
H 18500	3	6	59SW013
SC 150	2	4	59SW014
SC / SCF 250	2	4	59SW015
SC 500	2	4	59SW016
S / SC 750	2	5	59SW017
SC 1500	2,5	5,5	59SW018
SC 3000	2,5	5,5	59SW019
SC 5000	3	6	59SW020
SC 7500	3	6	59SW021
SC 10000	3	6	59SW022

⚠ The installation of the secondary wiper will require the removal of the active safety marker OSM where mounted.

Cylinder Code	A mm	B mm	Ø D mm	Secondary Wiper Code
M 50	-	9,5	15	59SW023
M 70	-	9,5	18	59SW024
M 90 rev. A	0,5	10,5	22	59SW025
M 200 rev. A	0,5	10,5	28	59SW026
M 90 rev. B	0,5	10,5	22	59SW045
M 200 rev. B	0,5	10,5	28	59SW046
RV 170	1,5	9,5	22	59SW027
RV 320	1,5	9,5	28	59SW028
ML 300	1,5	11,5	29	59SW030
ML 500	1,5	11,5	36	59SW031
ML 1000	1,5	11,5	42	59SW032
ML 1800	0,5	11,5	54	59SW033
ML 3000	0,5	11,5	67	59SW034
ML 4700	0,5	11,5	79	59SW035
ML 7500	0,5	11,5	100	59SW036
ML 12000	0,5	11,5	125	59SW037

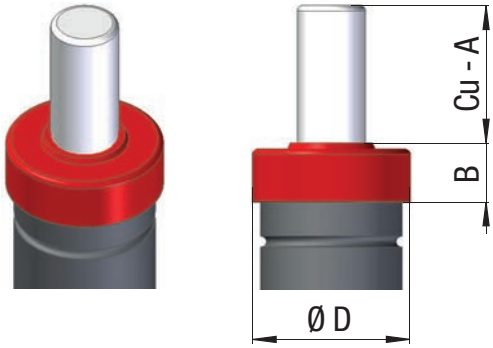

A = Nominal stroke reduction Cu = Nominal Stroke

Cylinder Code	A mm	B mm	Ø D mm	Secondary Wiper Code
MP 500	1,5	33	36	59SW043
MP 1000	1,5	19	42	59SW044

HOW TO ORDER

E.g. How to order a gas spring with Secondary Wiper **already installed**

= RV 2400-63-A-W

Identification letter for Secondary Wiper

Part Number for gas spring

E.g. How to order **only** the Secondary Wiper

= 59SW007

Part Number for Secondary Wiper

LINKED SYSTEM

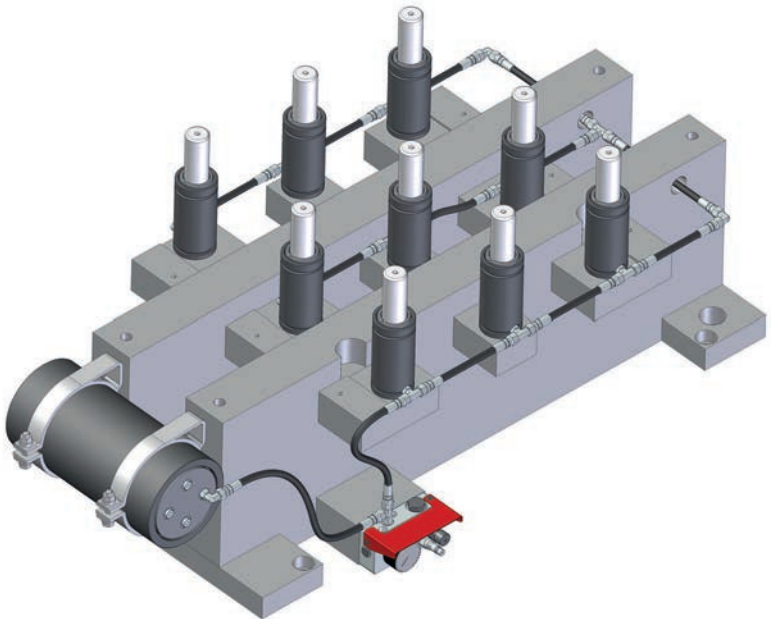

IT VANTAGGI

- Pressione uguale in tutti i cilindri
- Controllo della pressione = controllo della forza
- Aumento/riduzione della pressione = aumento/riduzione della forza attraverso il pannello di controllo anche durante lo stampaggio senza intervento diretto sui cilindri
- Utilizzo di polmoni di compensazione per un ridotto incremento della pressione a fine compressione
- Gestione di impianti e forze diverse nello stesso stampo (uso multipannello MCPC+AUMCP)
- Stop di sicurezza con uso pressostato
- Utilizzo tappo di sicurezza con disco di rottura CE
- Flessibilità di collegamento con tubi e raccordi EO - 24°, JIC 37°, Minimess, Micro 32°, ORFS

I cilindri collegabili a sistema (codice modello + N/NA) sono forniti privi di valvola unidirezionale e con corpo/fondello speciale dove previsto. Per le serie S/SC/H/KE/RV/RS/RF/RG/RT/LS è possibile trasformare i cilindri autonomi in cilindri collegabili a sistema semplicemente rimuovendo i dispositivi di tenuta dal foro di caricamento. Scaricare completamente la pressione prima di questa operazione. Qualora si rendesse necessario rimuovere uno qualsiasi dei componenti installati, scaricare completamente la pressione attraverso il pannello.

EN BENEFITS

- Same pressure in all cylinders
- Pressure control = force control
- Increase/decrease of pressure = increase/decrease of force by control panel even during stamping operation without direct acting to the cylinders
- Lower pressure increase by using compensation tank
- Possibility to manage different systems and forces in the same tool by using the multipanel MCPC+AUMCP
- Safe stop function through pressure switch
- Use of the safety plug with rupture disc CE
- Flexible linking by using hose and connection EO - 24°, JIC 37°, Minimess, Micro 32°, ORFS and couplings and many useful accessories

The hosed system cylinders (model code + N/NA) are supplied without charging valve and with special body/end plate when specified. However S/SC/H/KE/RV/RS/RF/RG/RT/LS series can be converted from self-contained to hosed system by simply removing the charging valve. Be sure that all pressure is exhausted before starting this operation. In case it's necessary to remove any of the installed components, pressure must be fully exhausted through the control panel.

DE VORTEILE

- Identischer Druck in allen Zylindern
- Druckkontrolle = Kraftkontrolle
- Steigerung/Minderung des Drucks = Erhöhung/Verringerung der Kraft über die Steuerung, auch während der Formung ohne direkten Eingriff an den Zylindern
- Einsatz von Ausgleichbehältern zur Reduzierung von Druckerhöhungen
- Verwaltung verschiedenartiger Anlagen und Leistungen in demselber Werkzeug über die Multisteuerung MCPC+AUMCP
- Sicherheitsstopp per Druckwächter
- Verwendung eines Sicherheitsverschlusses mit Berstscheibe (CE-Kennzeichnung)
- Flexibilität bei der Verbindung mit Rohren und Anschlüssen EO - 24°, JIC 37°, Minimess, Micro 32°, ORFS

Zylinder im verbund (Modellcode + N/NA) werden ohne Einwegventile und, sofern vorgesehen, mit speziellem Gehäuse/Boden geliefert. Für die Serien S/SC/H/KE/RV/RS/RF/RG/RT/LS können die autonomen arbeitenden Zylinder in Zylinder im verbund abgeändert werden, indem die Dichtungsvorrichtungen an der Luftzufuhröffnung entfernt werden. Lassen Sie die Druckluft vor diesem Arbeitsschritt komplett ab. Falls es sich als notwendig erweisen sollte, einen der installierten Komponenten zu entfernen, muss vorher die Druckluft mittels der Steuerung vollständig abgelassen werden.

FR AVANTAGES

- La même pression dans tous les ressorts
- Contrôle de la pression = contrôle de la force
- Augmentation/réduction de la pression = augmentation/réduction de la force par l'intermédiaire du panneau de contrôle, même durant le moulage, sans aucune intervention directe sur les ressorts
- Utilisation de réservoirs de compensation produisant une petite augmentation de la pression à la fin de la compression
- Gestion d'installations et de forces différentes sur le même outil (utilisation multi-panneaux MCPC+AUMCP)
- Arrêt de sécurité à l'aide d'un pressostat
- Utilisation d'un bouchon de sécurité avec disque de rupture CE
- Souplesse du raccordement à l'aide de tubes et de raccords EO - 24°, JIC 37°, Minimess, Micro 32°, ORFS

⚠ Les ressorts pouvant être reliés à un système (référence modèle + N/NA) sont livrés sans la vanne unidirectionnelle et avec corps/fond spécial si prévu. Pour les séries S/SC/H/KE/RV/RS/RF/RG/RT/LS, il est possible de transformer les ressorts autonomes en cylindres pouvant être reliés à un système en ôtant simplement les dispositifs d'étanchéité du trou de chargement. Décharger complètement la pression avant d'effectuer cette opération. S'il est nécessaire de démonter un des composants installés, décharger complètement la pression par l'intermédiaire du panneau de contrôle.

ES VENTAJAS

- La misma presión en todos los cilindros
- Control de la presión = control de la fuerza
- Aumento/reducción de la presión=aumento/reducción de la fuerza mediante el panel de control incluso en operaciones de estampación sin actuación directa sobre los cilindros
- Pueden emplearse pulmones de compensación para reducir el aumento de la presión al final de la compresión
- Gestión de equipos y fuerzas distintas sobre el mismo molde (uso multipanel MCPC+AUMCP)
- Parada de emergencia con presostato
- Tapón de seguridad con disco de ruptura CE
- Flexibilidad de conexión con tubos y acoplamientos EO - 24°, JIC 37°, Minimess, Micro 32°, ORFS

⚠ Los cilindros para su conexión en sistema (código modelo + N/NA) se sirven sin válvula unidireccional y con cuerpo/base especiales en los casos en que se requieran. En las series S/SC/H/KE/RV/RS/RF/RG/RT/LS, los cilindros autónomos pueden transformarse en cilindros para su conexión en sistema simplemente quitando los dispositivos de estanqueidad del orificio de carga. Antes de realizar esta operación, vaciar completamente la presión. Si fuera necesario quitar alguno de los componentes instalados, vaciar completamente la presión mediante el panel de control.

PT VANTAGENS

- Pressão igual em todos os cilindros
- Controlo da pressão = controlo da força
- Aumento/redução da pressão = aumento/redução da força através do painel de controlo também durante a estampagem sem intervenção directa sobre os cilindros
- Utilização dos tanques de compensação para redução do aumento da pressão no final da compressão
- Gestão de instalações e de várias forças na mesma Ferramenta (uso do multi-painel MCPC+AUMCP)
- Stop de segurança com utilização do pressostato
- Utilização de Bujão de segurança com disco de rotura CE
- Flexibilidade de ligação com tubos e ligações EO - 24°, JIC 37°, Minimess, Micro 32°, ORFS

⚠ Os cilindros ligáveis em sistema (código do modelo + N/NA) são fornecidos sem válvula unidireccional e com corpo/extremidade especial. Para a série S/SC/H/KE/RV/RS/RF/RG/RT/LS, é possível transformar os cilindros autónomos em cilindros ligáveis em sistema, bastando remover os dispositivos de retenção do orifício de carga. Descarregar completamente a pressão antes desta operação. No caso de ser necessário remover um dos componentes instalados, descarregar completamente a pressão através do painel de controlo.

LINKED SYSTEM OPERATING INSTRUCTION

IT Conservare tubi e raccordi lontano da fonti di calore e luce solare diretta (raggi UV).

EN Store hoses and fittings away from heat sources and direct sunlight (UV radiation).

DE Lagern Sie Schläuche und Anschlussstücke fern von Wärmequellen und direktem Sonnenlicht (UV-Strahlung).

FR Conserver tuyaux et raccords à l'écart de toute source de chaleur et de la lumière directe du soleil.

ES Almacene mangueras y conexiones lejos del calor y de la luz solar directa (rayos UV).

PT Manter mangueiras e conexões longe do calor e da luz do sol.

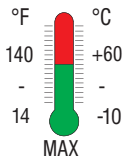

20% ÷ 60%
20°C / 68°F

IT Conservare tubi e raccordi protetti da alte temperature e dal contatto con oli di stampaggio, solventi, acidi e fluidi aggressivi in genere (ad es. soda e cloruri).

EN Keep hoses and fittings protected against high temperatures and contact with oils, solvents, acids and aggressive fluids in general (e.g. soda and chlorides).

DE Halten Sie Schläuche und Anschlussstücke geschützt vor hohen Temperaturen und dem Kontakt mit Schmierstoffen für die Metallbearbeitung, Lösungsmitteln, Säuren und aggressiven Flüssigkeiten im Allgemeinen (z. B. Soda und Chloride).

FR Protégez les tuyaux et les raccords contre les températures élevées et le contact avec les huiles, les solvants, les acides et les fluides agressifs en général (par exemple, la soude et les chlorures).

ES Almacene mangueras y conexiones protegidos de altas temperaturas y del contacto con aceites de moldeo, solventes, ácidos y fluidos agresivos en general (por ejemplo, soda y cloruros).

PT Manter tubos e conexões longe de altas temperaturas e de contato com oleos, solventes, acidos ou qualquer outro elemento agressivo aos materiais (ex. solda, cloro, etc..).

IT Nella produzione del tubo rispettare le istruzioni operative indicate nel manuale d'uso della pressa pneumo-idraulica 39PR06.

EN When producing the hoses, follow the instructions given in the user manual of the hydraulic press 39PR06.

DE Bei der Herstellung des Schlauchs die Angaben in der Betriebsanleitung der pneumo-hydraulischen Schlauchpresse 39PR06 beachten.

FR Lors de la fabrication des tuyaux, suivez les instructions données dans le manuel d'utilisation de la presse hydraulique 39PR06.

ES Para la producción de las mangueras, siga las instrucciones de funcionamiento indicadas en el manual del usuario de la prensa neumohidráulicas 39PR06.

PT Para cravamento das mangueiras, respeitar as orientações do manual de instruções da prensa pneumatica 39PR06.

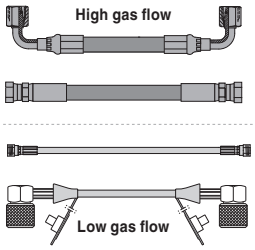

IT Selezionare tubi e raccordi idonei per l'applicazione.

EN Select hoses and fittings suitable for the system.

DE Für die Anwendung geeignete Schläuche und Anschlussstücke auswählen.

FR Sélectionnez les tuyaux et les raccords adaptés au système.

ES Seleccione mangueras y conexiones adecuados para la necesidad.

PT Selecionar os tubos e conexões de acordo com a necessidade.

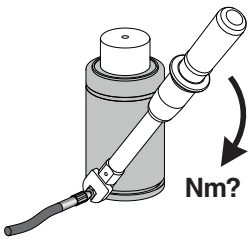

IT Rispettare la corretta coppia di serraggio dei raccordi indicata a catalogo per ogni modello.

EN Respect the correct tightening torque of the fittings as specified in the catalogue for each model.

DE Das richtige Anziehdrehmoment der Anschlüsse, wie im Katalog für jedes Modell angegeben, beachten.

FR Respectez le couple de serrage correct des raccords comme indiqué dans le catalogue pour chaque modèle.

ES Respete el par de apriete de las conexiones indicado en el catálogo para cada modelo.

PT Respeitar o torque correto para cada conexão indicado no catalogo para cada modelo.

LINKED SYSTEM OPERATING INSTRUCTION

RIGHT

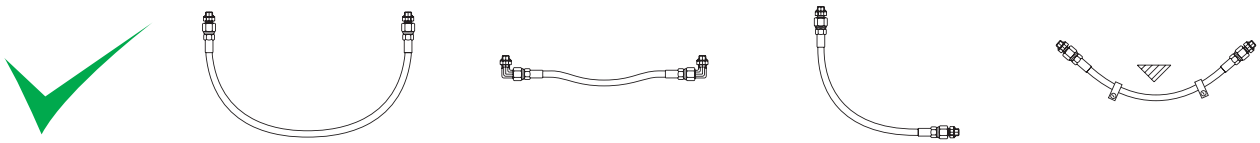

WRONG

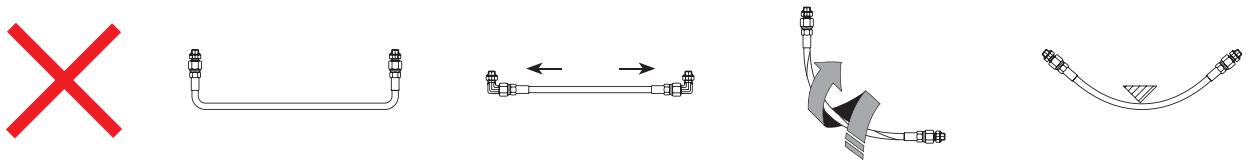

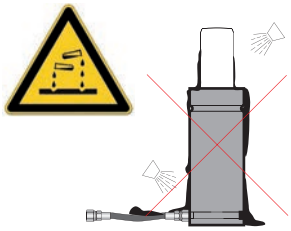

IT Evitare il contatto con solventi, acidi e fluidi aggressivi in genere (soda, cloruri) durante l'uso.

EN Avoid contact with solvents, acids and aggressive fluids in general (e.g. soda and chlorides) during use.

DE Bei Verwendung den Kontakt mit Lösungsmitteln, Säuren und aggressiven Flüssigkeiten im Allgemeinen (Soda, Chloride) vermeiden.

FR Évitez le contact avec les solvants, les acides et les fluides agressifs en général (par exemple, la soude et les chlorures) pendant l'utilisation.

ES Evite el contacto con solventes, ácidos y fluidos agresivos en general (por ejemplo, soda y cloruros) durante el uso.

PT Evitar que tubos e conexões mantenham contato com oleos, solventes, acidos ou qualquer outro elemento agressivo aos materiais (ex. solda, cloro, etc..).

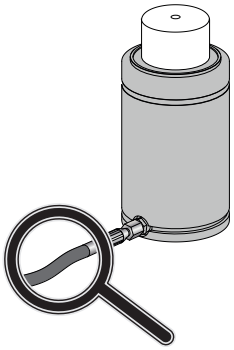

IT Verificare ad ogni manutenzione dello stampo lo stato dei tubi e in particolare:
- Assenza di deterioramento dei tubi dovuto a sfregamenti, corrosione, tagli o schiacciamenti.
- Posizione dei tubi come da progetto. - Corretto serraggio dei raccordi.

EN Check at each maintenance of the die the condition of the hoses and specifically:
- absence of hose deterioration due to rubbing, wear, cutting or crushing.
- positioning of the hoses corresponding to the project's specifications. - Correct tightening of the fittings.

DE Bei jeder Wartung des Werkzeugs den Zustand der Schläuche prüfen und insbesondere:
- keine Beschädigung der Schläuche durch Reibung, Korrosion, Schneiden, Quetschen.
- die Position der Schläuche entsprechend der Konstruktion. - Das richtige Anziehen der Anschlüsse.

FR Vérifiez à chaque entretien du moule l'état des tuyaux et plus précisément:
- absence de détérioration des tuyaux par frottement, usure, coupure ou écrasement.
- positionnement des tuyaux conforme aux spécifications du projet. - Serrage correct des raccords.

ES Compruebe el estado de las mangueras en cada mantenimiento del troquel, en particular:
- Ausencia de deterioro de las mangueras debido a roces, corrosión, cortes o aplastamientos.
- Posicionamiento de las mangueras según el proyecto. - Correcto apriete de las conexiones.

PT Verificar a cada manutenção do ferramental as condições das mangueiras e especificamente:
- Se as mangueiras não posseum nenhum dano, desgaste, corte ou fissura.
- Se as conexões estão nas mesmas posições indicadas no projeto. - Aperto correto das conexões.

LIFE WARRANTY

IT Se correttamente installati, utilizzati e non esposti a fattori di rischio, la durata in funzionamento di tubi e raccordi è attesa almeno pari a quella dei cilindri.

EN If correctly installed and used, without being exposed to risk factors, the expected lifetime of hoses and fittings is at least equal to the one of gas springs.

DE Bei sachgemäßem Einbau bzw. Anwendung und ohne Einwirken von Risikofaktoren wird erwartet, dass die Lebensdauer der Schläuche und Anschlüsse mindestens so lang ist wie die der Gasdruckfedern.

FR S'ils sont correctement installés et utilisés, sans être exposé à des facteurs de risque, la durée de vie attendue des tuyaux et des raccords est au moins égale à celle des ressorts à gaz.

ES Si correctamente instalados, utilizados y no expuestos a factores de riesgo, la vida útil esperada de mangueras y conexiones es al menos igual a la de los cilindros.

PT Se corretamente instalados e utilizados, a vida util das mangueiras e conexões são no minimo a mesma vida util dos cilindros.

LINKED SYSTEM SELECTION

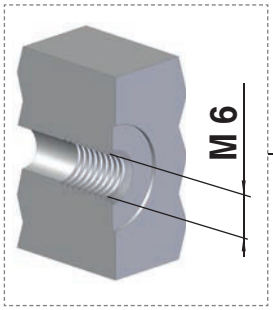

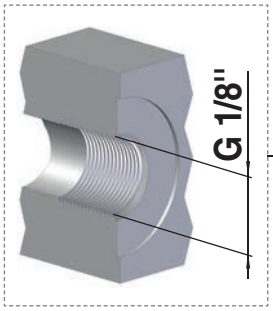

MINIMESS - CONNECTIONS
S12,65x1,5

MICRO - CONNECTIONS
M8x1

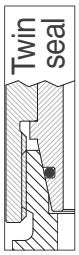

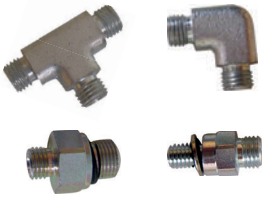

JIC 37°- CONNECTIONS
7/16"-20 UNF

ORFS - CONNECTIONS
9/16"-18 UNF

EO - 24° - CONNECTIONS
M12x1,5

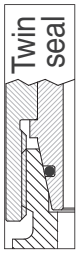

TM

Low gas flow

TSM

Low gas flow

TNC

High gas flow

HY 400

High gas flow

HY 500

High gas flow

ACCESSORIES

IT
- Pressa trasportabile con pompa pneumo-idraulica
- Idonea per raccordi dritti, 45° e 90°

EN
- Transportable press with hydraulic manual pump
- Suitable for straight, 45° and 90° fittings

DE
- Transportabele Presse mit manueller Hydraulikpumpe
- Geeignet für gerade, 45° und 90° Anschlüsse

FR
- Presse transportable avec pompe oléodynamique manuelle
- Utilisable avec raccords droits, 45° et 90°

ES
- Prensa transportable con bomba oleodinámica manual
- Puede ser utilizada con tuberías derechas, 45° y 90°

PT
- Prensa transportável com bomba hidráulica manual
- Pode ser usado com tubos retos, 45° e 90°

code 39PR06

code 58UT022A (included)

IT Utensile rimuovi morsetti con calamita
EN Magnet tool to remove pressing jaws
DE Magnetwerkzeug für die Entfernung von Pressbacken
FR Outil magnétique pour enlever les mâchoires de pressage
ES Herramienta magnética para la remoción de las mordazas de prensado
PT Ferramenta magnética para remover os mordentes de prensar

code 58UT001A (optional)

IT Forbice taglia tubo
EN Scissor for hose
DE Schlauchschneideschere
FR Ciseaux coupe-tube
ES Tijeras cortatubos
PT Tesouras corta tubos

code 58UT023A (optional)

IT Lampada led con magnete
EN LED Light with magnet
DE LED-Lampe mit Magnet
FR Lampe à LED magnétique
ES Lámpara LED con imán
PT Lâmpada LED com íman

			H L P L x P x H	Kg	°F °C
AIR	7 bar *110 psi*	100 TON *110 US TON*	380 x 430 x 400 mm *15 x 17 x 16 inch*	38 kg *84 lb*	-5 ÷ 40 °C *23 ÷ 104 °F*

CONNECTIONS	ORFS "TSM" *HOSE Ø 5,5*	Micro 32° - JIC 37° "TSM" *HOSE Ø 5,5*	Minimess "TM" *HOSE Ø 5,1*	JIC 37° "TNC" *HOSE Ø 8,1*	EO 24° "HY 500" *HOSE Ø 11*	ORFS "HY 400" *HOSE Ø 12,7*
	p. 284	p. 272 - 279	p. 274	p. 272	p. 268	p. 282

PRESSING JAWS	code 39MTR10 (optional)	code 39MTR11 (optional)	code 39MTR12 (optional)	code 39MTR13 (optional)

Ordering example: **39PR06A + 39MTR11** — Pressing jaws for Jic 37° "TNC" HOSE Ø 8,1

HY 500 EO - 24° Hose Ø 11 mm

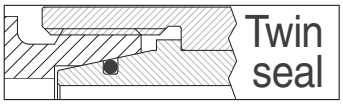

SPECIAL SPRINGS

code 36HY50001...

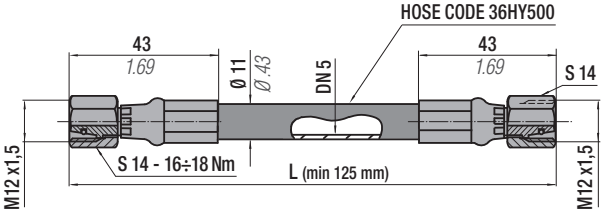

code 36HY50002...

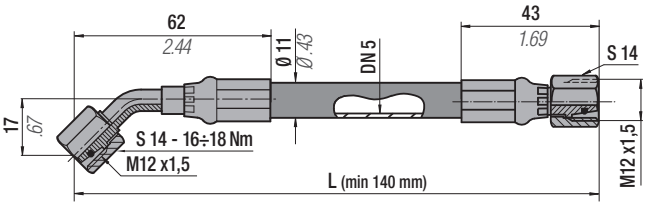

code 36HY50003...

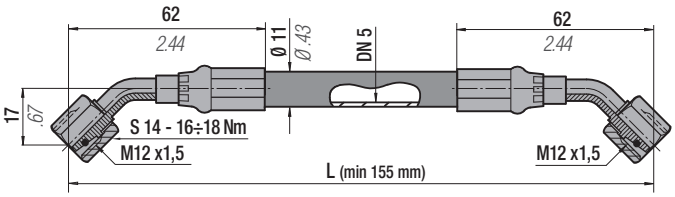

code 36HY50004...

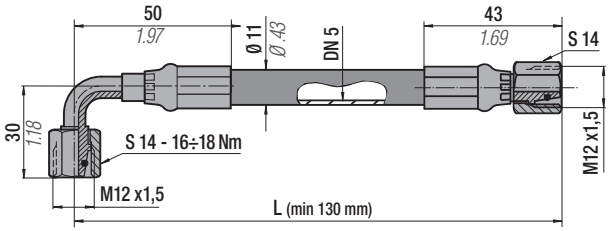

code 36HY50005...

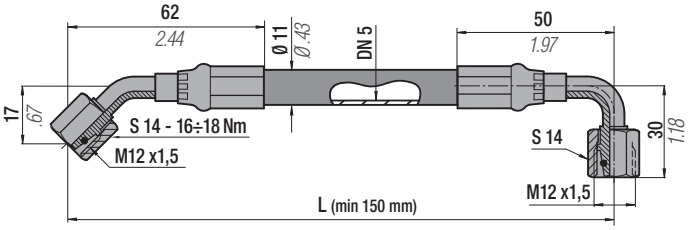

code 36HY50006...

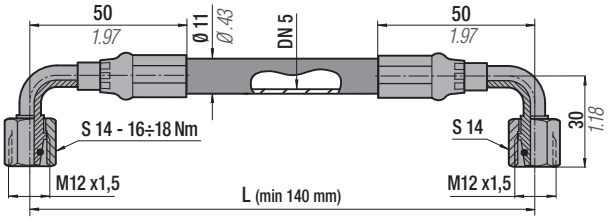

Technical data				
"L" min	See each type	-	Volume	18 ml/metre
Operation pressure	345 bar	*5003 psi*	Dimension	3/16" (external ø 11 mm)
Burst Pressure	1380 bar at 20°C	*20010 psi at 68°F*	Material	Thermoplastic
R (bending radius)	40 mm	*1.57 in*	Standard	SAE 100R8
Operation temperature	-40+ 100°C	*-38 +212°F*	Outer casing	Perforated

Lunghezza richiesta comprensiva di raccordi terminali
Length upon request including end hose fittings
Länge Anfrage einschließlich Ende Schlaucharmaturen

Longueur requise, y compris des raccords d'extrémité
Longitud requerida, incluyendo accesorios de los extremos
Comprimento necessário incluindo todos os acessórios

L = 5 mm upword increase - Example (36HY50001 0300; 36HY50001 0305; ...)

code: 36FF11A

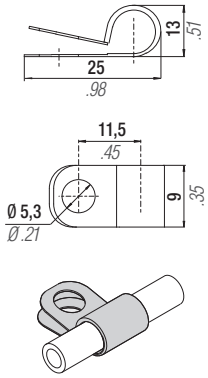

HOSE FITTINGS

code 36P2401

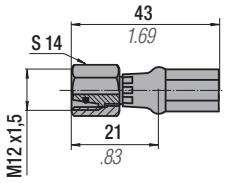

code 36P2402

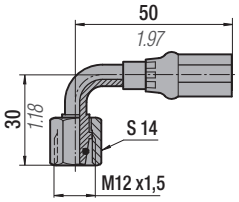

code 36P2403

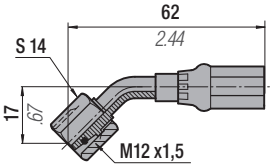

*All dimensions in **mm**/inch*

Raccordi tubo-cilindro/pannello - Hose-cylinder/panel connections - Anschlüsse zwischen schlauch und Zylinder/Kontrollarmatur - Raccords tuyau-cylindre/tableau - Conexiones sistema de cilindros/panel - Racord tubo-cilindro/painel

code 36R2401

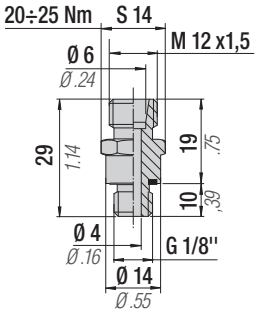

code 36R2402

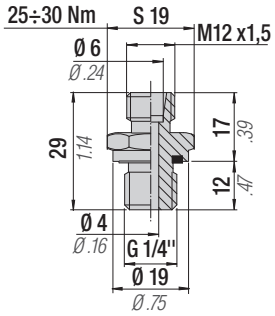

Raccordi di derivazione - Offtake connections - Anschlüßstutzen - Raccords de dérivation - Racores - Racord de derivação

code 36R2403

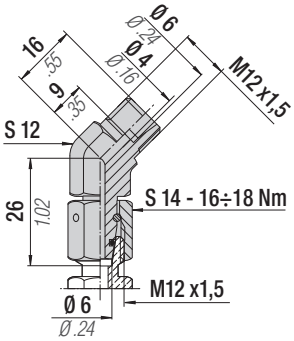

code 36R2404

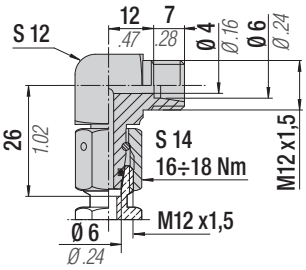

code 36R2405

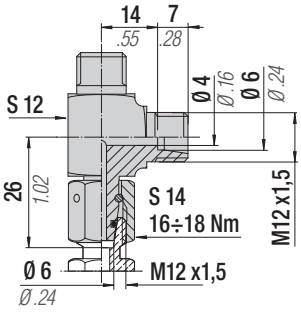

code 36R2406

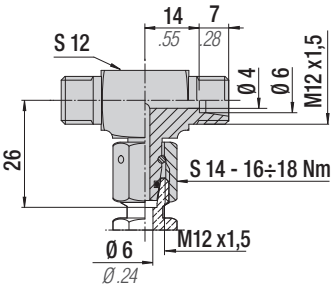

Raccordi tubo-tubo - Hose-hose connections - Anschlüsse zwischen Schlauch und Schlauch - Raccords tuyau-tuyau - Conexiones de tubo a tubo - Racord tubo-tubo

code 36R2407

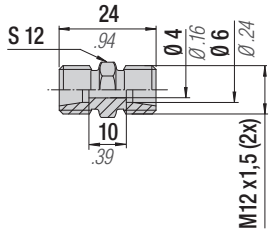

code 36R2408

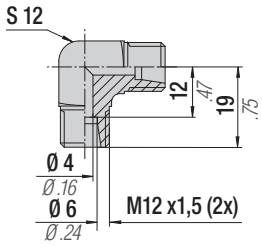

code 36R2409

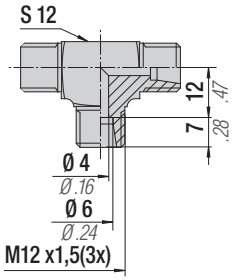

code 36R2410

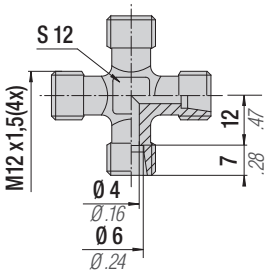

*All dimensions in **mm**/inch*

EO - 24°

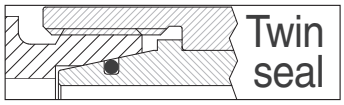

Esempi di installazione - Installation examples - Einbaubeispiele - Exemples de montage - Ejemplos de instalación - Exemplos de instalação

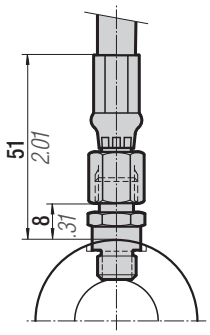

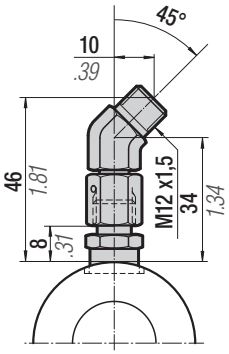

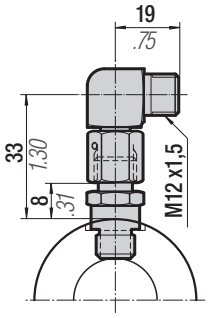

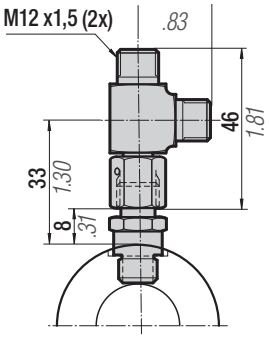

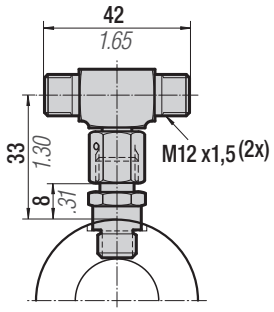

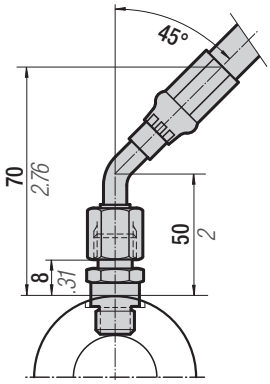

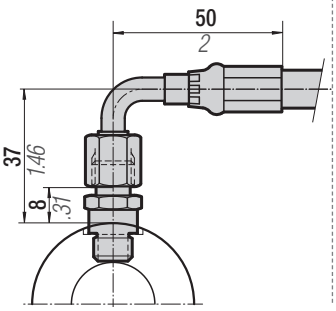

*All dimensions in **mm**/inch*

THIS PAGE IS INTENTIONALLY LEFT BLANK

TNC JIC 37° Hose Ø 8,1 mm

code TNC 7/16...

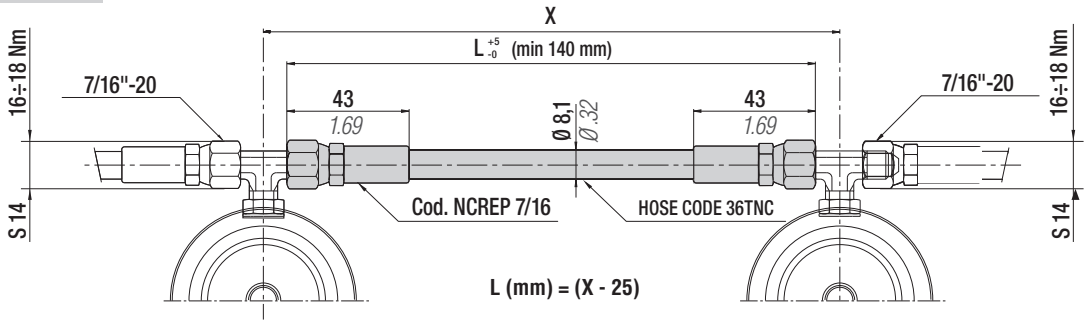

Technical data				
"L" min	See above	*5.51 in*	Volume	12,6 ml/metre
Operation pressure	420 bar	*6090 psi*	Dimension	1/8" (external ø 8,1 mm)
Burst Pressure	1680 bar at 20°C	*24360 psi at 68°F*	Material	Thermoplastic
R (bending radius)	25 mm	*0.98 in*	Standard	SAE 100R8
Operation temperature	-40+ 100°C	*-38 +212°F*	Outer casing	Perforated

Lunghezze standard (mm) inclusive di n. 2 raccordi NCREP 7/16
Standard lengths (mm) inclusive of no. 2 connections NCREP 7/16
Standard-Länge (mm) einsch. 2 NCREP 7/16 -Anschlüssen

Longueur standard (mm) comprenant 2 raccords NCREP 7/16
Longitud estándar (mm) con 2 racores incluidos NCREP 7/16
Comprimento standard (mm) incluído nas 2 ligações NCREP 7/16

L = 5 mm upword increase - Example (TNC 7/16 140 mm; TNC 7/16 145 mm ...)

code: 36FF09A

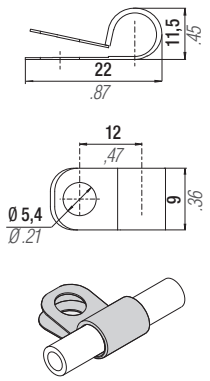

TSM JIC 37° Hose Ø 5,5 mm

code TSM7/16...

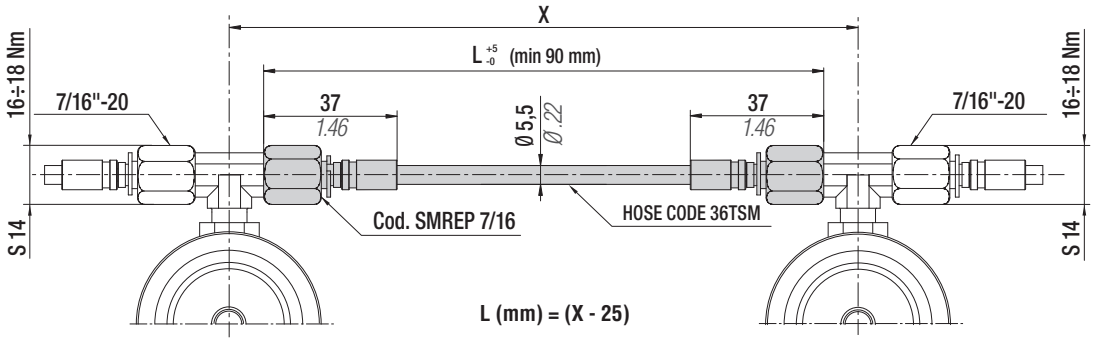

Technical data				
"L" min	See above	*3.54 in*	Volume	3 ml/metre
Operation pressure	630 bar	*9135 psi*	Dimension	5/64" (external ø 5,5 mm)
Burst Pressure	1890 bar at 20°C	*27400 psi at 68°F*	Material	Thermoplastic
R (bending radius)	20 mm	*0.79 in*	Standard	-
Operation temperature	-40+ 100°C	*-38 +212°F*	Outer casing	Perforated

Lunghezze standard (mm) inclusive di n. 2 raccordi SMREP 7/16
Standard lengths (mm) inclusive of no. 2 connections SMREP 7/16
Standard-Länge (mm) einsch. 2 SMREP 7/16 -Anschlüssen

Longueur standard (mm) comprenant 2 raccords SMREP 7/16
Longitud estándar (mm) con 2 racores incluidos SMREP 7/16
Comprimento standard (mm) incluído nas 2 ligações SMREP 7/16

L = 10 mm upword increase - Example (TSM 7/16 90 mm; TSM 7/16 100 mm ...)

code: 36FF06A

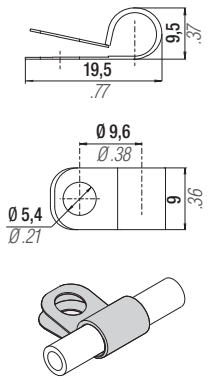

*All dimensions in **mm**/inch*

Raccordi tubo-cilindro/pannello - Hose-cylinder/panel connections - Anschlüsse zwischen schlauch und Zylinder/Kontrollarmatur - Raccords tuyau-cylindre/tableau - Conexiones sistema de cilindros/panel - Racord tubo-cilindro/painel

code RTC-D

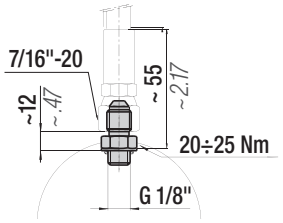

code RTC-M

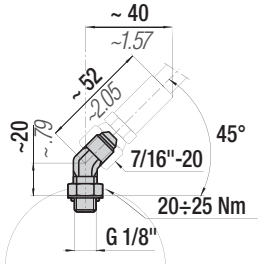

code RTC-R

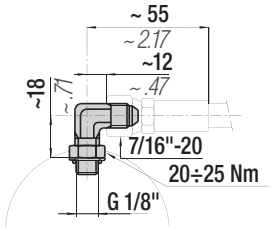

code RTC-L

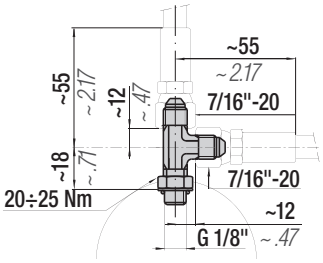

code RTC-T

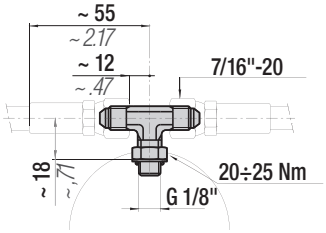

code 36J01A

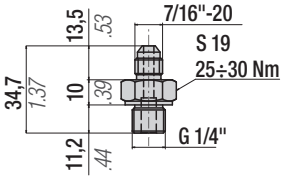

Raccordi di derivazione - Offtake connections - Anschlüßstutzen - Raccords de dérivation - Racores - Racord de derivação

code RDR

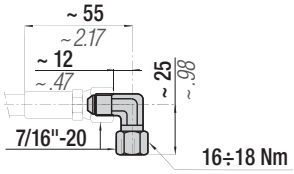

code RDT

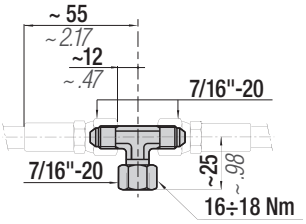

code RDM

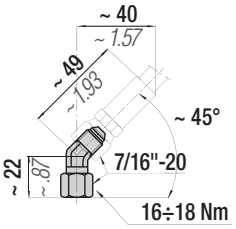

code RDL

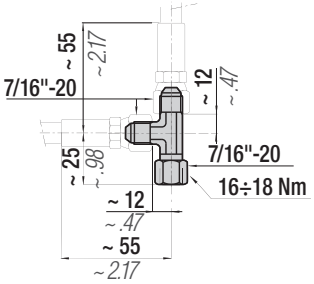

Raccordi tubo-tubo - Hose-hose connections - Anschlüsse zwischen Schlauch und Schlauch - Raccords tuyau-tuyau - Conexiones de tubo a tubo - Racord tubo-tubo

code RTT-D

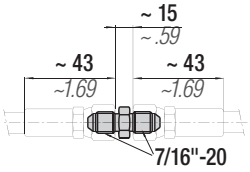

code RTT-R

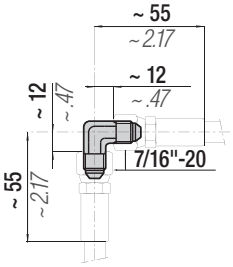

code RTT-T

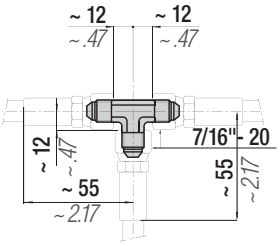

code RTT-C

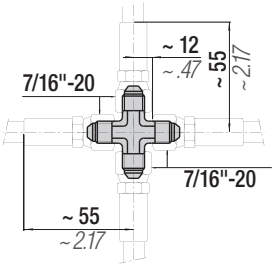

⚠ Available ONLY for loose supply

JIC 37° Hose Ø 8 mm TNB

PARKER made

Hose	Hose fittings
code 36TNB	**code 36NBREP7/16**

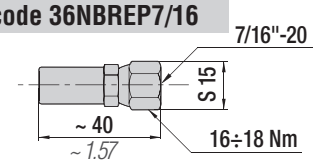

Technical data		
"L" min	140 mm	5.51 in
Operation pressure	415 bar	6017 psi
Burst Pressure	1655 bar at 20°C	24000 psi at 68°F
R (bending radius)	13 mm	0.51 in
Operation temperature	-40+ 100°C	-38 +212°F

*All dimensions in **mm**/inch*

TM MINIMESS
Hose Ø 5,1 mm

SPECIAL SPRINGS

code TMD

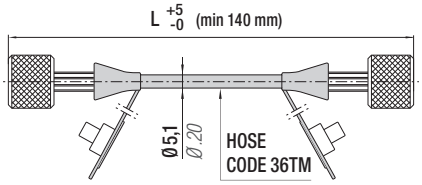

code TMD...-1

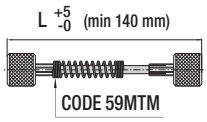

code TMD...-2

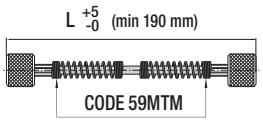

code TMDR

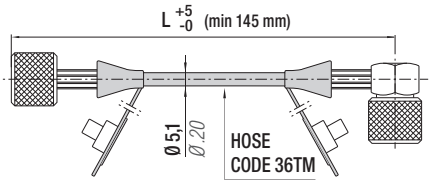

code TMDR...-1

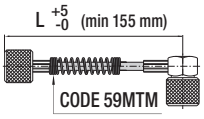

code TMDR...-3

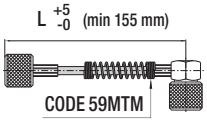

code TMDR...-2

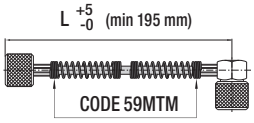

code TMR

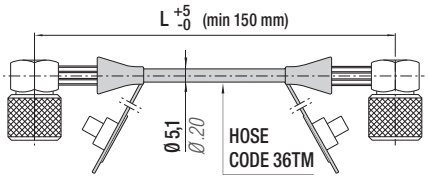

code TMR...-3

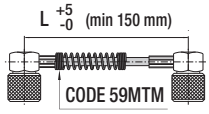

code TMR...-2

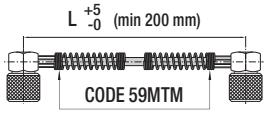

code TMR...V1

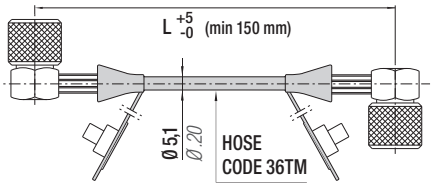

code TMR...V1-3

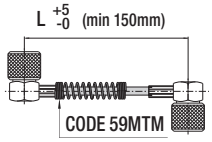

code TMR...V1-2

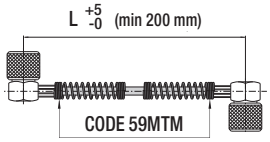

code TMR...V2

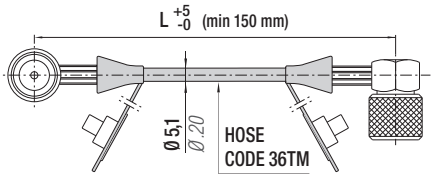

code TMR...V2-3

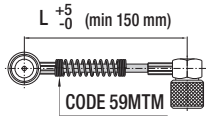

code TMR...V2-2

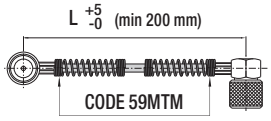

code TMR...V3

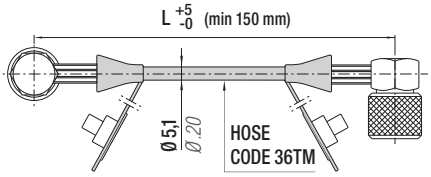

code TMR...V3-3

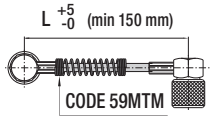

code TMR...V3-2

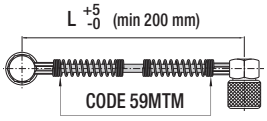

Technical data

"L" min (TMD - TMDR)	See above	-	Operation temp.	-20 +100°C	-2 +212°F
"L" min (TMR - TMR...)	See above	-	Dimension hose	5/64'' (external ø 5,1 mm)	
Operation pressure	630 bar	9135 psi	Material hose	Polyamid	
Burst Pressure	1950 bar at 20°C	28275 psi at 68°F	Standard	-	
R (bending radius)	20 mm	0.79 in	Outer casing hose	Perforated	

Lunghezze standard (mm) inclusive di n.2 raccordi e tappi
Standard lengths (mm) inclusive of no.2 connections and plugs
Standard-Länge (mm) einsch.2 und Stopfen Anschlüssen

Longueur standard (mm) comprenant 2 raccords et bouchons
Longitud estándar (mm) con 2 racores incluidos y tapones
Comprimentzo standard (mm) incluído nas 2 ligações e tampões

standard L = 140 mm min. - 5 mm upword increase - Example (TMD140; TMDR145; TMR150; TMR160V1; TMR170V2; ...)

code: 59MTM

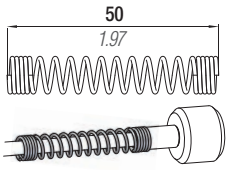

Protezione antipiega
Anti-kink protection
Knickschutzwendel
Protection anti-croquage
Protección anti-pliegue
Proteção anti-dobra

HOSE FITTINGS

code 36MREPD

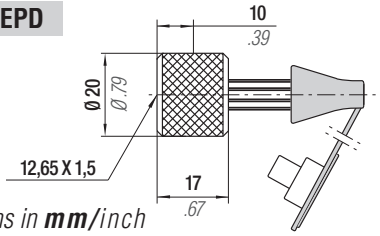

code 36MREPR

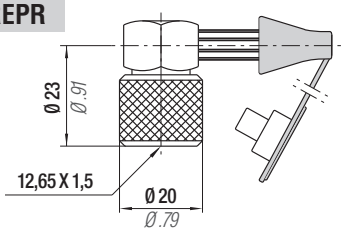

code: 36FF06A

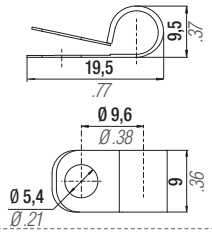

*All dimensions in **mm**/inch*

CODE	G	I		H		L		S	C		Ø D		E	
		mm	inch	mm	inch	mm	inch	S - ...÷... Nm	mm	inch	mm	inch	mm	inch
RMTC 1)	G 1/8"	8	0.31	30	1.18	41	1.61	S14 - 20÷25 Nm	12	0.47	19,5	0.77	4	0.16
RMTC01 1)	G 1/4"	10	0.39	31	1.22	39	1.54	S19 - 25÷30 Nm	12	0.47	17	0.67	3	0.12
RMTC02 2)	G 1/8"	8	0.31	30	1.18	-	-	S14 - 20÷25 Nm	12	0.47	-	-	4	0.16
RMTC03 2)	G 1/4"	10	0.39	31	1.22	-	-	S19 - 25÷30 Nm	12	0.47	-	-	3	0.12
RMPT 1)	7/16-20	11	0.43	30	1.18	43	1.69	S17 - 20÷25 Nm	12	0.47	19,5	0.77	3	0.12

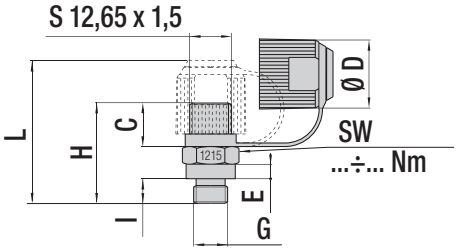

1) Con valvola unidirezionale - With one way valve - Mit Rückschlagventil - Avec valve unidirectionnelle - Con válvula unidireccional - Com válvula unidireccional
2) Senza valvola unidirezionale - Without one way valve - Ohne Rückschlagventil - Sans valve unidirectionnelle - Sin válvula unidireccional - Sem válvula unidireccional

code RMTT

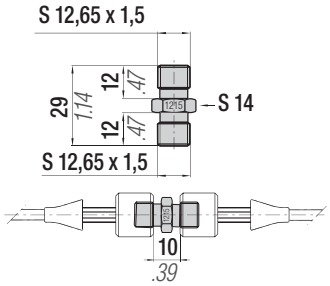

Blocchetto di distribuzione - Distribution block - Gasverteilstück - Plot de distribution - Bloque de distribución - Bloco de distribuição

BDM01...

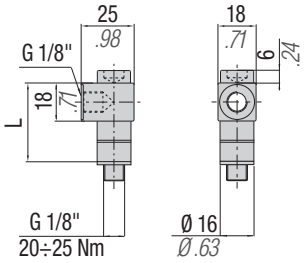

CODE	L	
	mm	inch
39BDM0102	24	0.94
39BDM01	38,5	1.52
39BDM0103	48	1.89

BDM02...

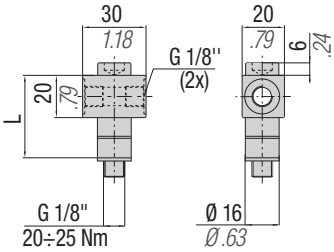

CODE	L	
	mm	inch
39BDM0202	26	1.02
39BDM02	40,5	1.59
39BDM0203	50	1.97

BDM03...

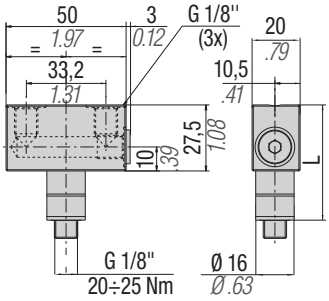

CODE	L	
	mm	inch
39BDM0302	33,5	1.32
39BDM0301	48	1.89
39BDM0303	57,5	2.26

BDM04...

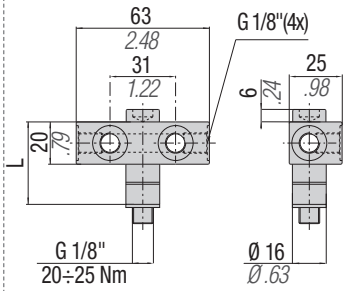

CODE	L	
	mm	inch
39BDM0402	26	1.02
39BDM04	40,5	1.59
39BDM0403	50	1.97

BDM...

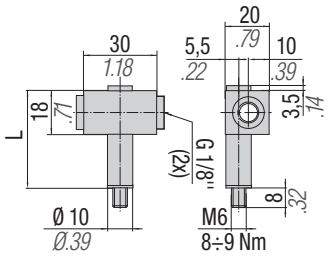

CODE	L	
	mm	inch
39BDM05	26	1.020
39BDM06	42	1.65

BDM...

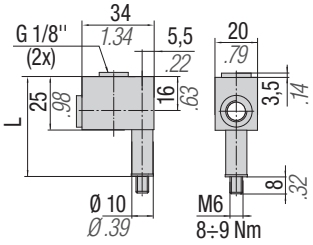

CODE	L	
	mm	inch
39BDM07	33	1.30
39BDM08	49	1.93

*All dimensions in **mm**/inch*

CONNECTIONS MINIMESS HEAVY DUTY STAINLESS STEEL G 1/8"

Raccordi tubo-cilindro/pannello - Hose-cylinder/panel connections - Anschlüsse zwischen schlauch und Zylinder/Kontrollarmatur - Raccords tuyau-cylindre/tableau - Conexiones sistema de cilindros/panel - Racord tubo-cilindro/painel

code 39BDM0901

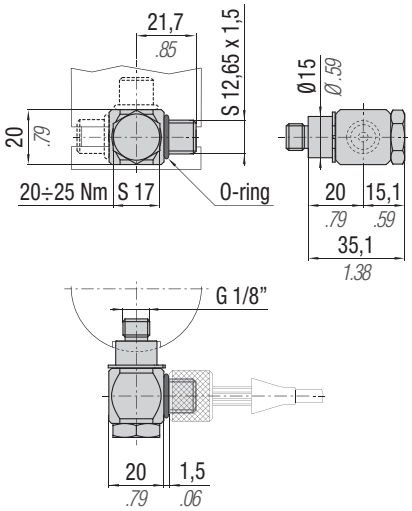

code 39BDM0902

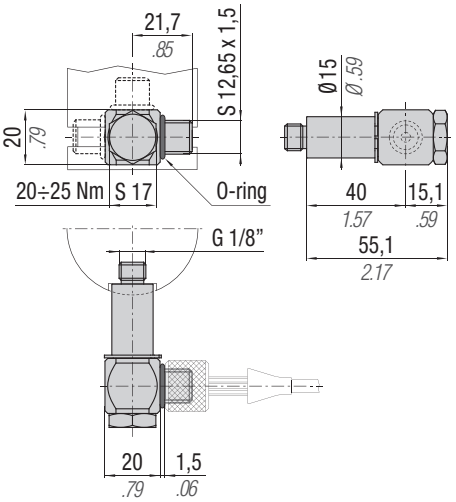

code 39BDM1001

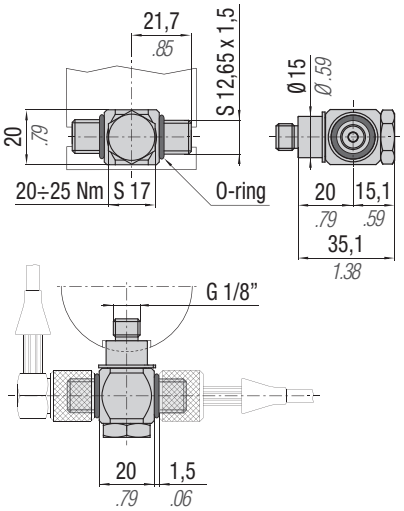

code 39BDM1002

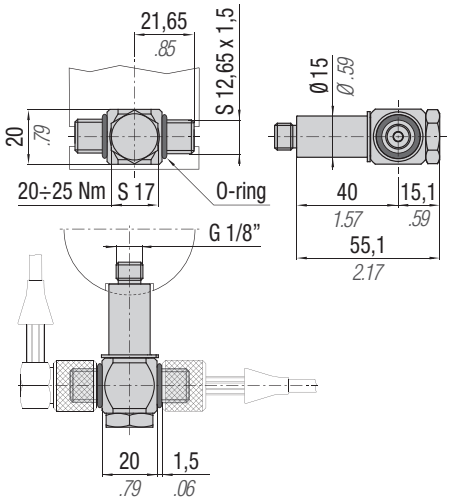

Blocchetto di distribuzione - Distribution block - Gasverteilstück - Plot de distribution - Bloque de distribución - Bloco de distribuição

code 39BDM1101

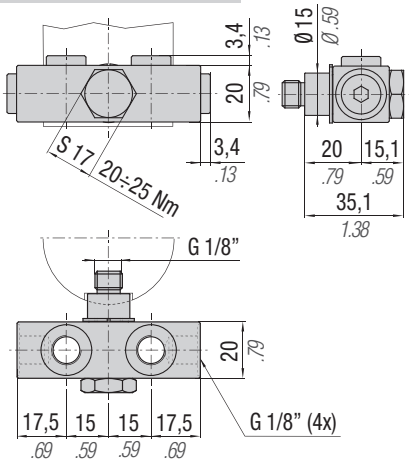

code 39BDM1102

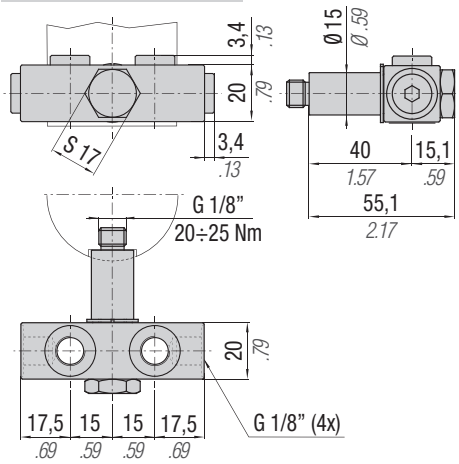

CONNECTIONS MINIMESS HEAVY DUTY STAINLESS STEEL M6

Raccordi tubo-cilindro/pannello - Hose-cylinder/panel connections - Anschlüsse zwischen schlauch und Zylinder/Kontrollarmatur - Raccords tuyau-cylindre/tableau - Conexiones sistema de cilindros/panel - Racord tubo-cilindro/painel

code 39BDM1201

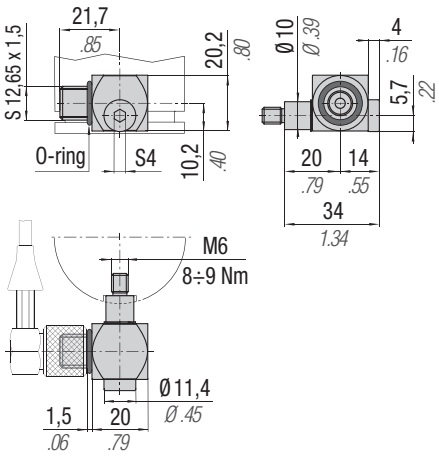

code 39BDM1202

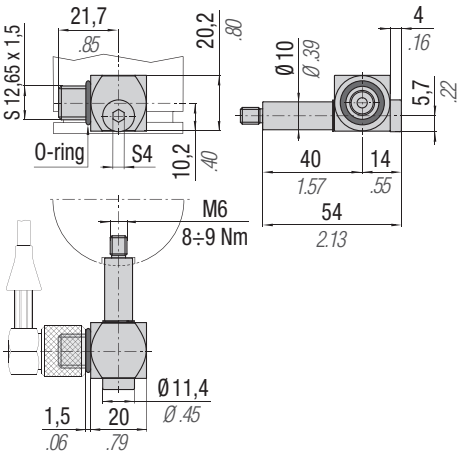

code 39BDM1301

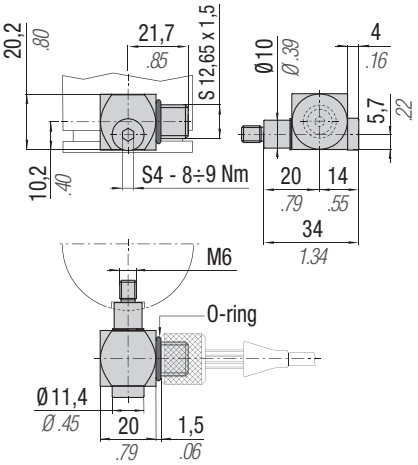

*All dimensions in **mm**/inch*

MINIMESS HEAVY DUTY
STAINLESS STEEL M6

code 39BDM1302

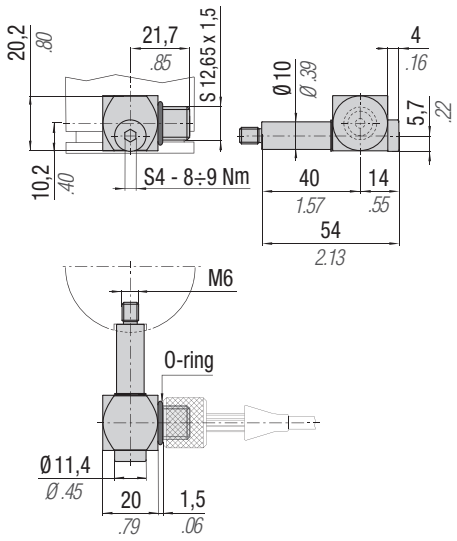

code 39BDM1401

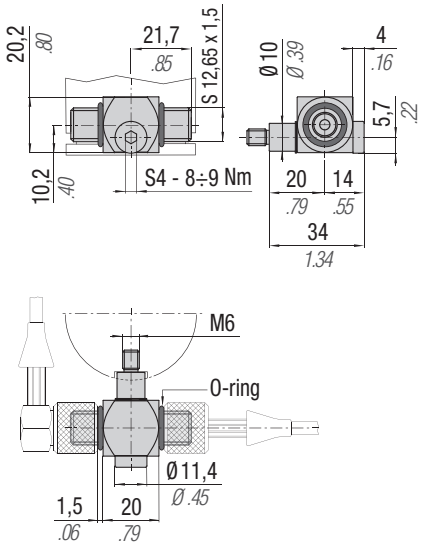

code 39BDM1402

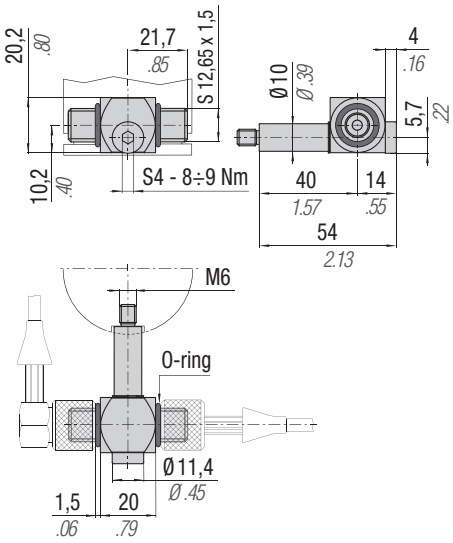

code 39BDM1601

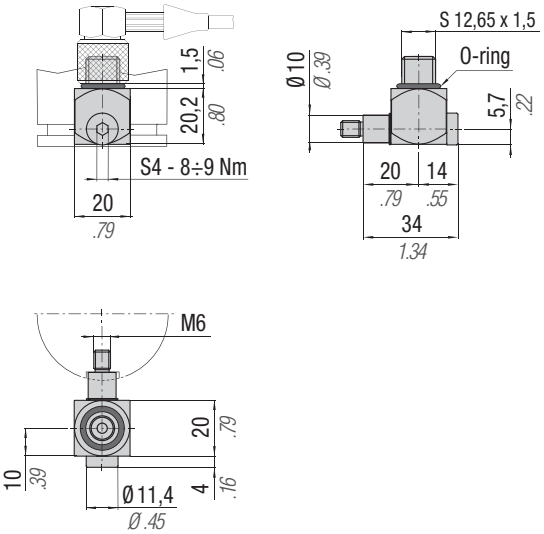

code 39BDM1602

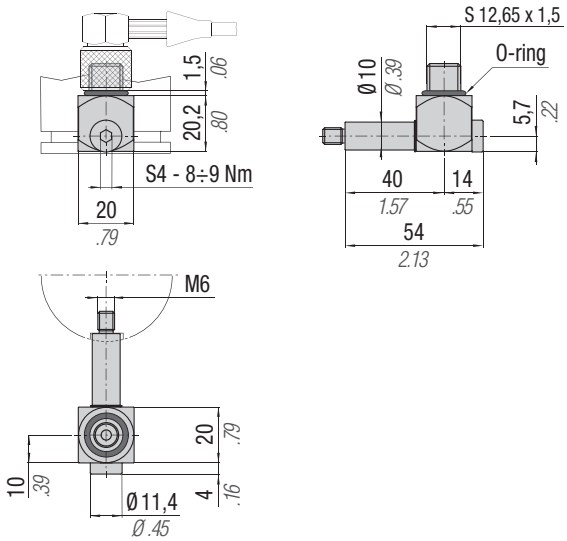

Blocchetto di distribuzione - Distribution block - Gasverteilstück - Plot de distribution - Bloque de distribución - Bloco de distribuição

code 39BDM1501

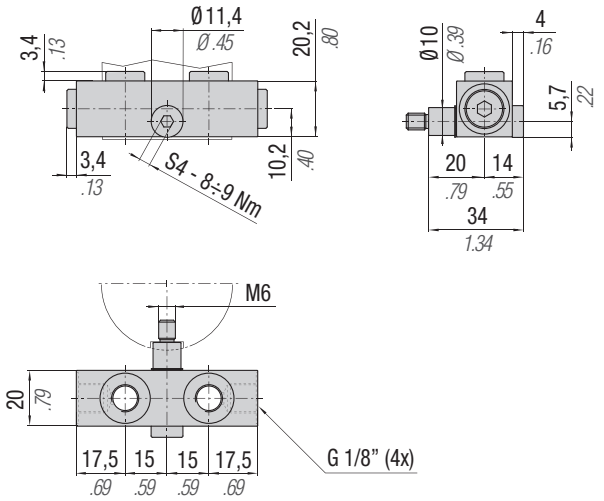

code 39BDM1502

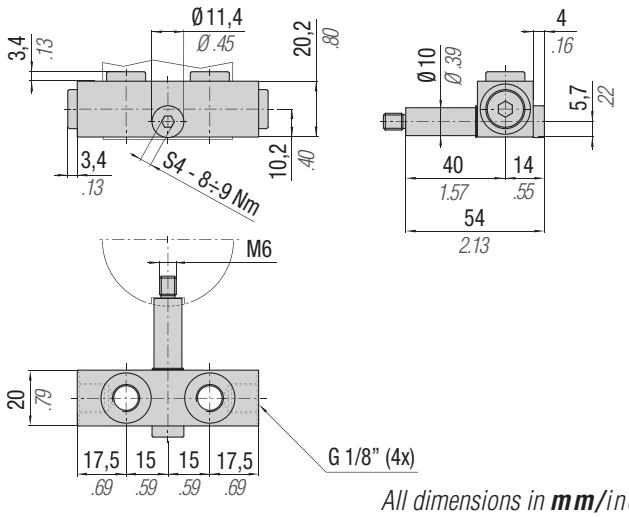

*All dimensions in **mm**/inch*

TSM MICRO 32° Hose Ø 5,5 mm

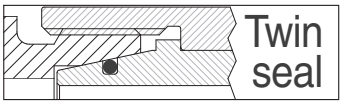

SPECIAL SPRINGS

code TSMM8...

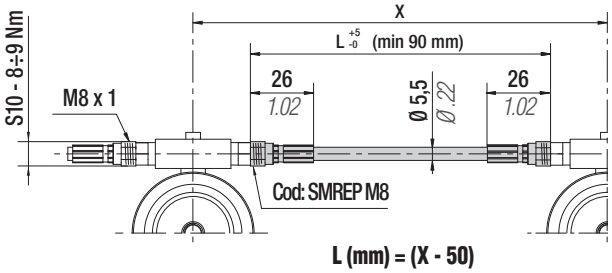

L = 10 mm upword increase
Example (TSMM8 090 mm; TSMM8 100 mm ...)

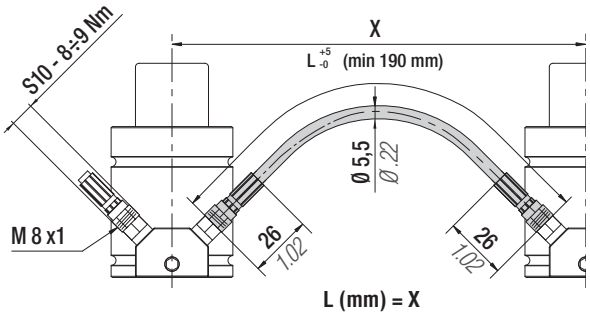

L = 10 mm upword increase
Example (TSMM8 190 mm; TSMM8 200 mm ...)

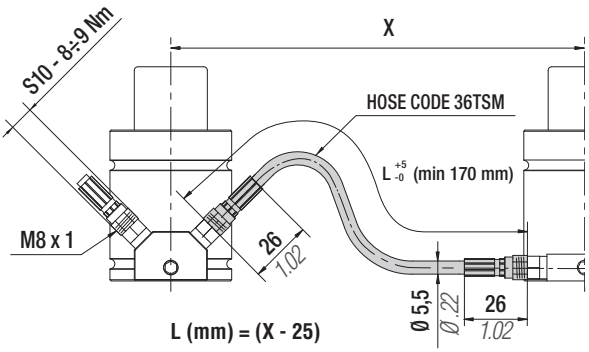

L = 10 mm upword increase
Example (TSMM8 170 mm; TSMM8 180 mm ...)

code: 36FF06A

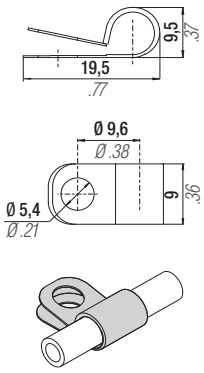

Technical data				
"L" min	See each type	*3.54 in*	Volume	3 ml/metre
Operation pressure	630 bar	*9135 psi*	Dimension	5/64'' (external ø 5,5 mm)
Burst Pressure	1890 bar at 20°C	*27400 psi at 68°F*	Material	Thermoplastic
R (bending radius)	20 mm	*0.79 in*	Standard	-
Operation temp.	-40 +100°C	*-38 +212°F*	Outer casing	Perforated

Lunghezze standard (mm) inclusive di n.2 raccordi SMREP M8
Standard lengths (mm) inclusive of no. 2 connections SMREP M8
Standard-Länge (mm) einsch. 2 SMREP-Anschlüssen M8

Longueur standard (mm) comprenant 2 raccords SMREP M8
Longitud estándar (mm) con 2 racores incluidos SMREP M8
Comprimento standard (mm) incluído nas 2 ligações SMREP M8

CONNECTIONS MICRO 32°

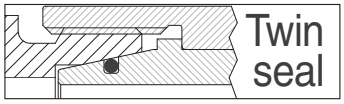

Blocchetto tubo-cilindro - Hose-cylinder block - Block, bestehend aus Schlauch-Zylinder - Bloc tube- cylindre - Bloque tubo-cilindro - Bloqueio do tubo-cilindro

PHASING OUT see p.281

code BDSM01

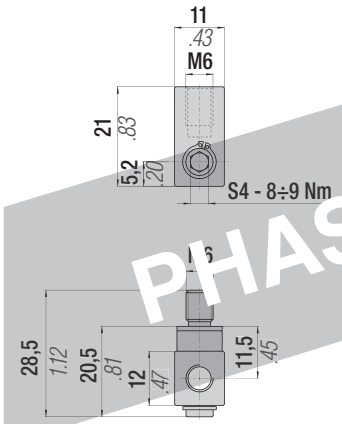

code BDSM02

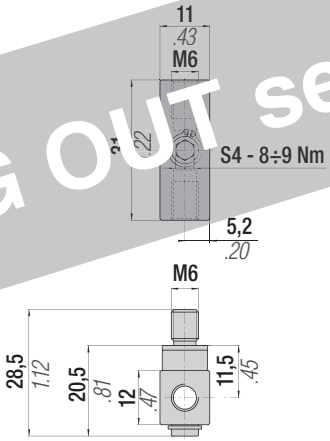

code BDSM02-45

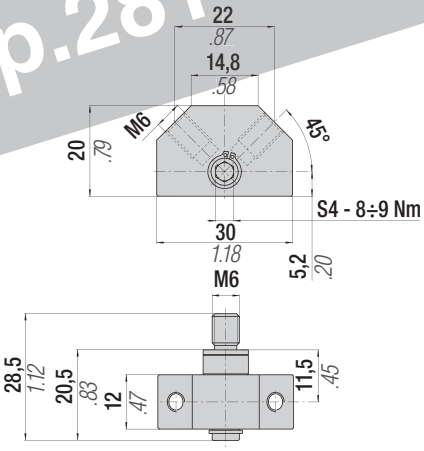

*All dimensions in **mm**/inch*

MICRO 32° and JIC 37°
Hose Ø 5,5 mm

TSM

code TSM01A...

code: 36FF06A

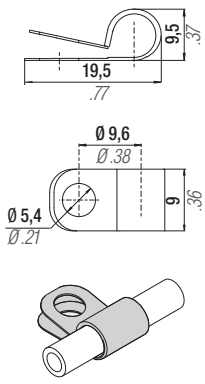

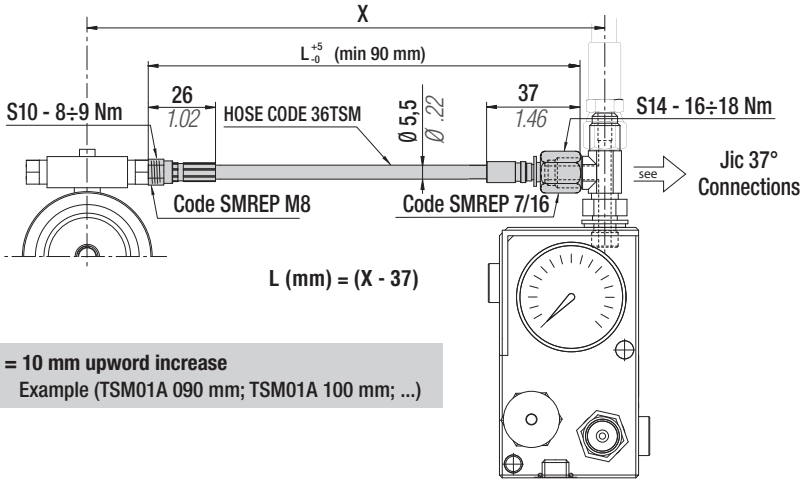

L = 10 mm upword increase
Example (TSM01A 090 mm; TSM01A 100 mm; ...)

Technical data				
"L" min	See each type	*3.54 in*	Volume	3 ml/metre
Operation pressure	630 bar	*9135 psi*	Dimension	5/64" (external ø 5,5 mm)
Burst Pressure	1890 bar at 20°C	*27400 psi at 68°F*	Material	Thermoplastic
R (bending radius)	20 mm	*0.79 in*	Standard	-
Operation temp.	-40 +100°C	*-38 +212°F*	Outer casing	Perforated

Lunghezze standard (mm) inclusive di n.2 raccordi SMREP M8
Standard lengths (mm) inclusive of no. 2 connections SMREP M8
Standard-Länge (mm) einsch. 2 SMREP-Anschlüssen M8

Longueur standard (mm) comprenant 2 raccords SMREP M8
Longitud estándar (mm) con 2 racores incluidos SMREP M8
Comprimento standard (mm) incluído nas 2 ligações SMREP M8

MICRO 32° and MINIMESS
Hose Ø 5,1 mm

TM

code 36TM01A...

code: 36FF06A

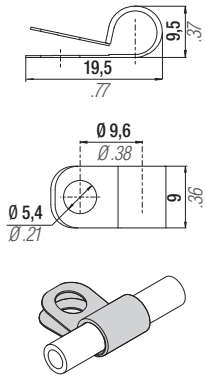

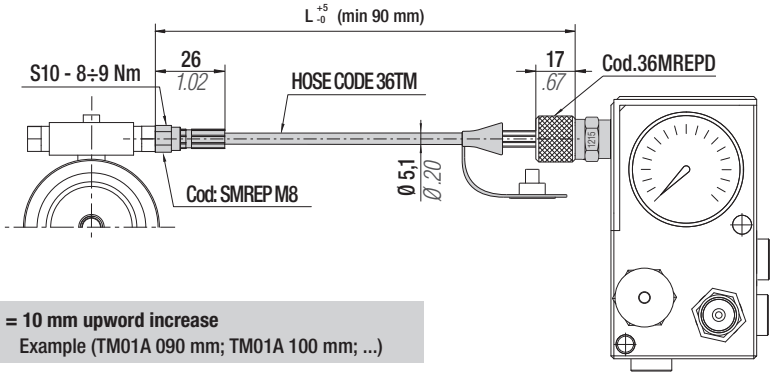

L = 10 mm upword increase
Example (TM01A 090 mm; TM01A 100 mm; ...)

Technical data				
"L" min	See each type	-	Volume	3 ml/metre
Operation pressure	630 bar	*9135 psi*	Dimension hose	5/64" (external ø 5,1 mm)
Burst Pressure	1950 bar at 20°C	*28275 psi at 68°F*	Material hose	Polyamid
R (bending radius)	20 mm	*0.79 in*	Standard	-
Operation temp.	-20 +100°C	*-2 +212°F*	Outer casing hose	Perforated

Lunghezze standard (mm) inclusive di n.2 raccordi e tappi
Standard lengths (mm) inclusive of no.2 connections and plugs
Standard-Länge (mm) einsch.2 und Stopfen Anschlüssen

Longueur standard (mm) comprenant 2 raccords et bouchons
Longitud estándar (mm) con 2 racores incluidos y tapones
Comprimentzo standard (mm) incluído nas 2 ligações e tampões

*All dimensions in **mm**/inch*

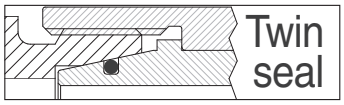

Raccordi tubo-cilindro/pannello - Hose-cylinder/panel connections - Anschlüsse zwischen schlauch und Zylinder/Kontrollarmatur - Raccords tuyau-cylindre/tableau - Conexiones sistema de cilindros/panel - Racord tubo-cilindro/painel

code MT

(only M 50, M70, M90, M90 TBM, M90 TEM, M90 TBI, M200 RV 170 - 320 rev.B)

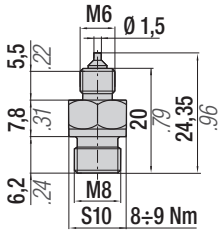

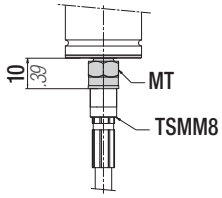

code MB

(only M 50, M70, M90, M90 TBM, M90 TEM, M90 TBI, M200 RV 170 - 320 rev.B)

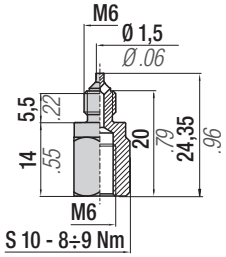

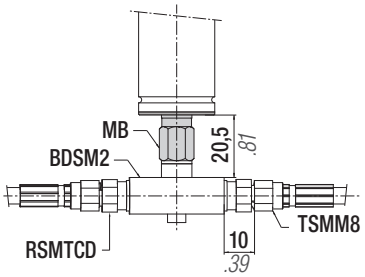

code RSMTCD

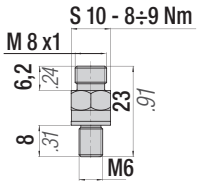

code 36M08A

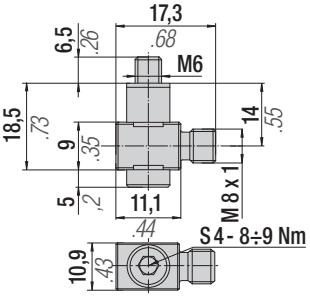

code 36M09A

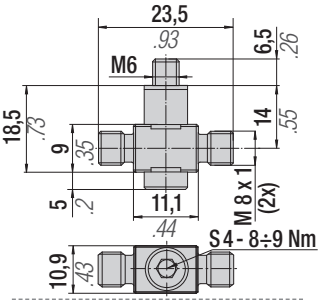

code 36M10B

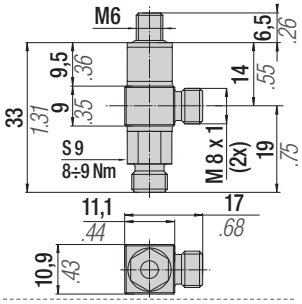

code 36M11B

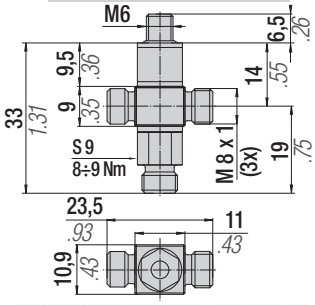

code RSMPTD

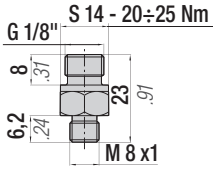

code 36M03A

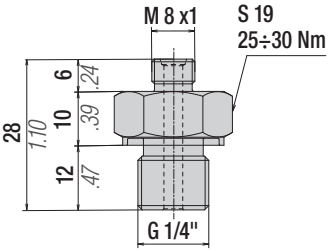

Raccordi di derivazione - Offtake connections - Anschlüßstutzen - Raccords de dérivation - Racores - Racord de derivação

code 36M02A

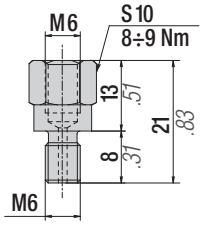

code 36M04A

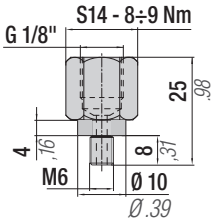

code 36MTC

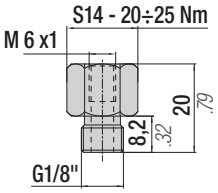

code 36MTR

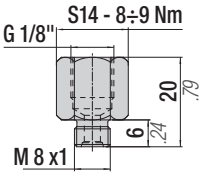

code 36M01A

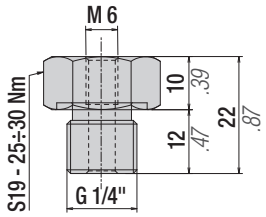

code 36M12A

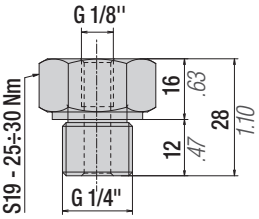

code 36M21A

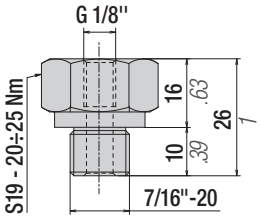

*All dimensions in **mm**/inch*

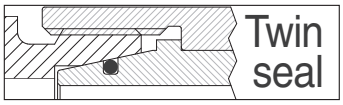

MICRO 32° CONNECTIONS

Raccordi tubo-tubo - Hose-hose connections - Anschlüsse zwischen Schlauch und Schlauch - Raccords tuyau-tuyau - Conexiones de tubo a tubo - Racord tubo-tubo

code 36MTTD

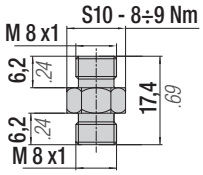

code 36RTTJM

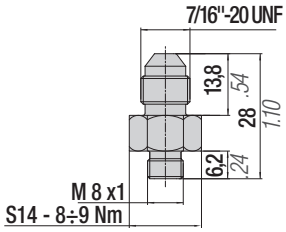

code 36M05A

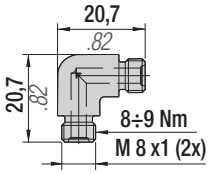

code 36M06A

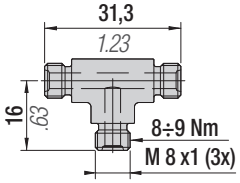

code 36M07A

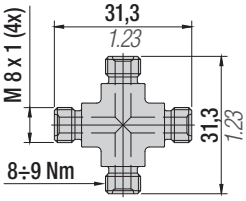

MICRO 32° HEAVY DUTY STAINLESS STEEL CONNECTIONS

Raccordi tubo-cilindro/pannello - Hose-cylinder/panel connections - Anschlüsse zwischen schlauch und Zylinder/Kontrollarmatur - Raccords tuyau-cylindre/tableau - Conexiones sistema de cilindros/panel - Racord tubo-cilindro/painel

code 36M15A

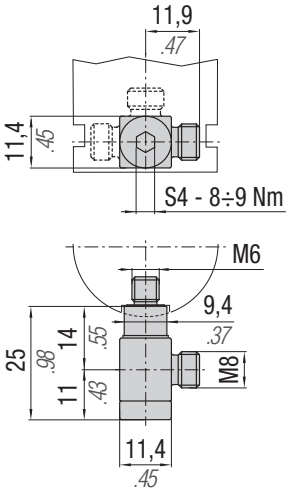

code 36M16A

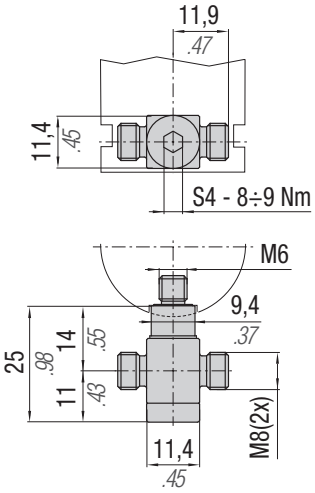

code 36M17A

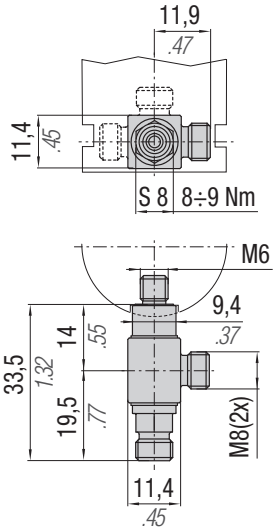

code 36M18A

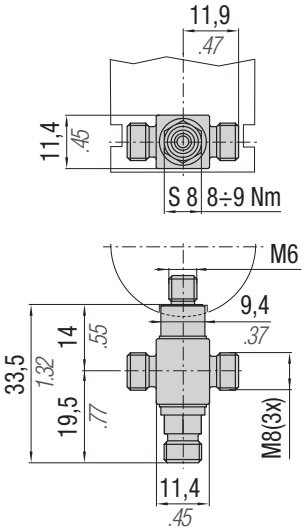

*All dimensions in **mm**/inch*

ORFS - O-ring face seal
Hose Ø 12,7 mm

code 36HY40016...

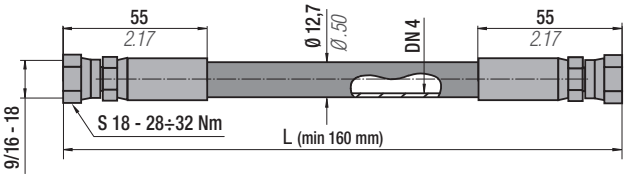

code 36HY40017...

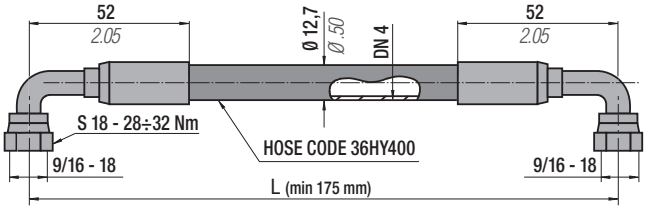

code 36HY40018...

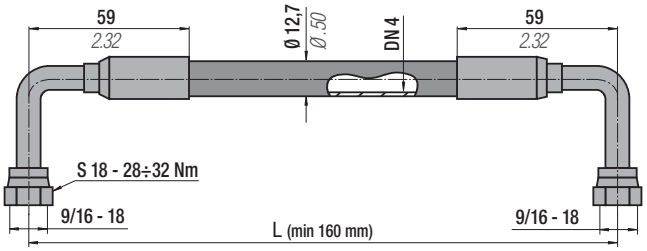

code 36HY40019...

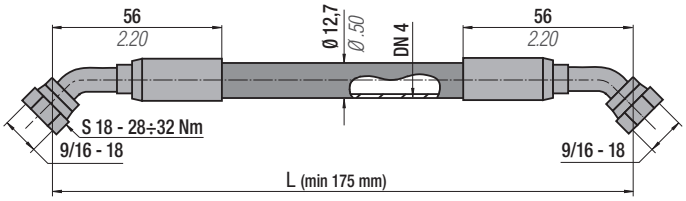

code 36HY40020...

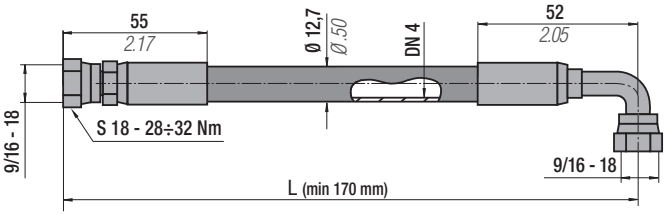

code 36HY40021...

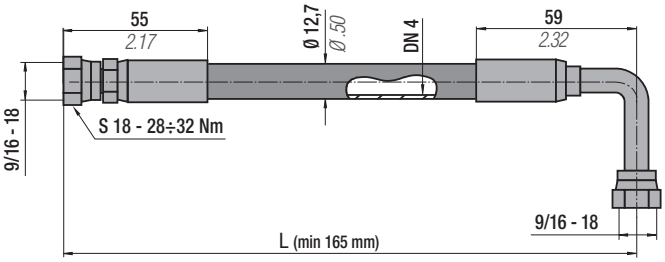

code 36HY40022...

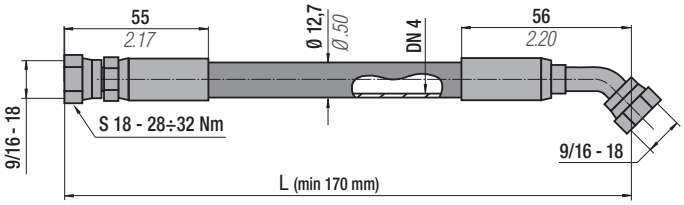

code 36HY40023...

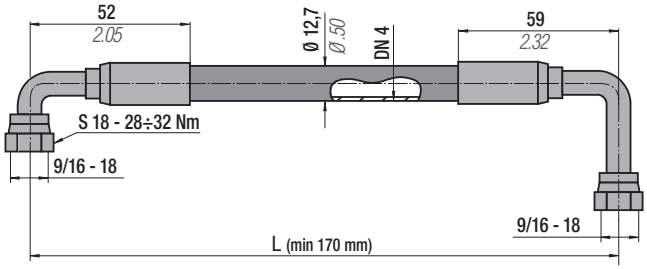

code 36HY40024...

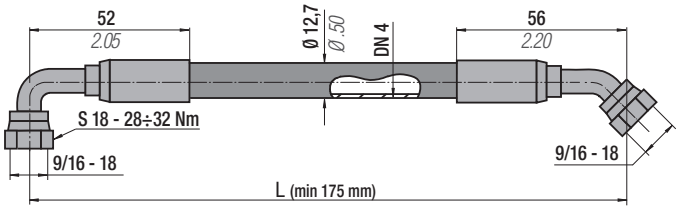

code 36HY40025...

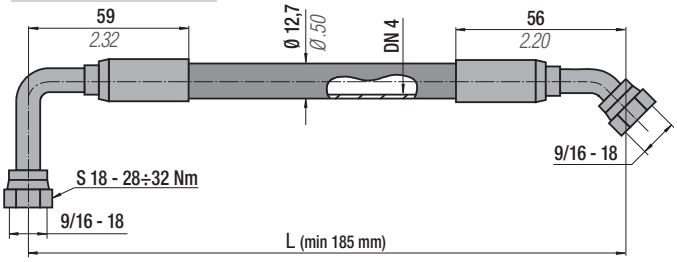

*All dimensions in **mm**/inch*

ORFS - O-ring face seal
Hose ø 12,7 mm

code 36HY40026...

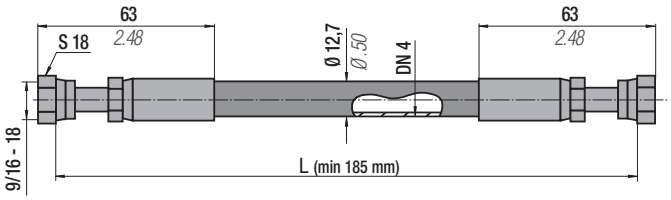

code 36HY40027...

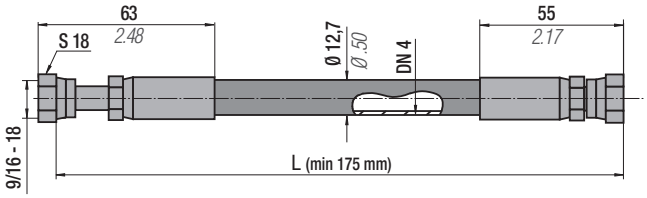

code 36HY40028...

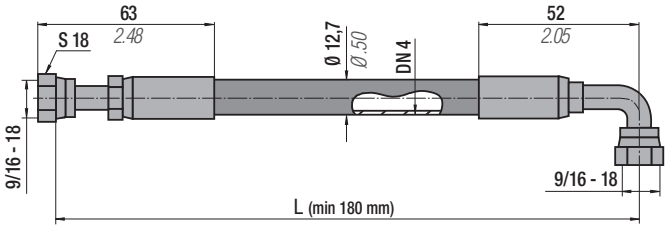

code 36HY40029...

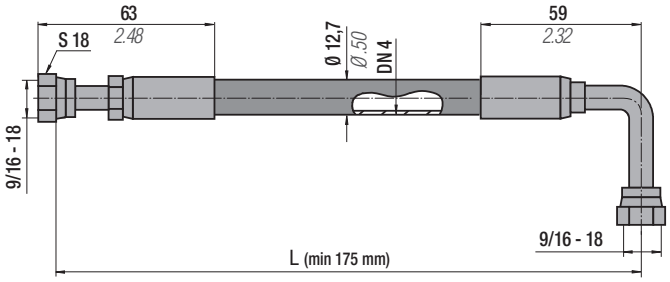

code 36HY40030...

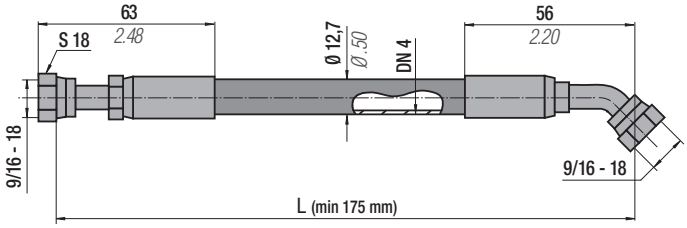

code: 36FF13A

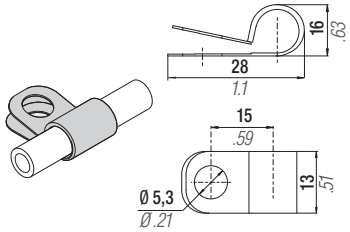

Technical data				
"L" min	See each type	-	Volume	32 ml/metre
Operation pressure	345 bar	*5003 psi*	Dimension	1/4" (external ø 12,7 mm)
Burst Pressure	1380 bar at 20°C	*20010 psi at 68°F*	Material	Thermoplastic
R (bending radius)	51 mm	*2.01 in*	Standard	SAE 100R8
Operation temperature	-40+ 100°C	*-38 +212°F*	Outer casing	Perforated

Lunghezza richiesta comprensiva di raccordi terminali
Length upon request including end hose fittings
Länge Anfrage einschließlich Ende Schlaucharmaturen
Longueur requise, y compris des raccords d'extrémité
Longitud requerida, incluyendo accesorios de los extremos
Comprimento necessário incluindo todos os acessórios

L = 5 mm upword increase - Example (36HY40016 0300; 36HY40016 0305; ...)

HOSE FITTINGS

code 36P9/1604 Straight Swivel

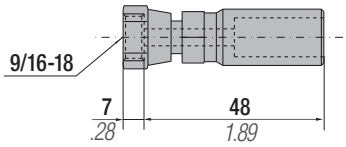

code 36P9/1605 Straight Long Swivel

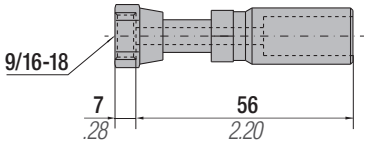

code 36P9/1606 90° Long Swivel

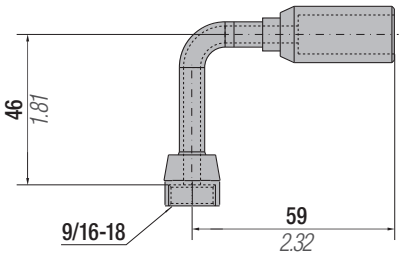

code 36P9/1607 90° Swivel

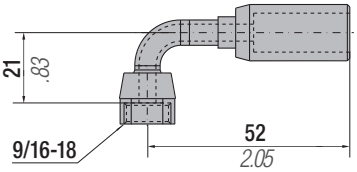

code 36P9/1608 45° Swivel

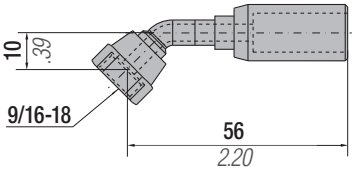

*All dimensions in **mm**/inch*

TSM ORFS - O-ring face seal Hose Ø 5,5 mm

SPECIAL SPRINGS

code 36TSM9/1601...

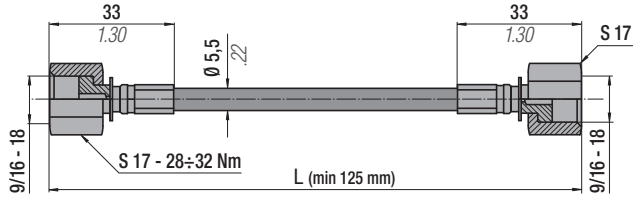

code 36TSM9/1602...

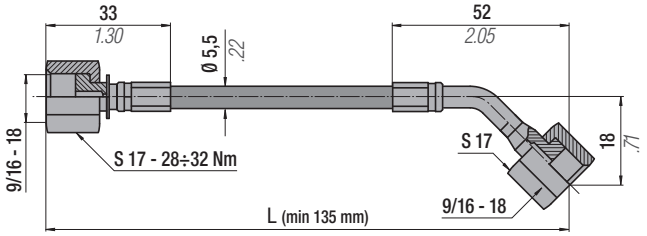

code 36TSM9/1603...

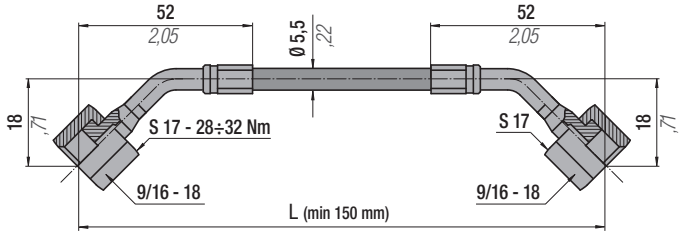

code 36TSM9/1604...

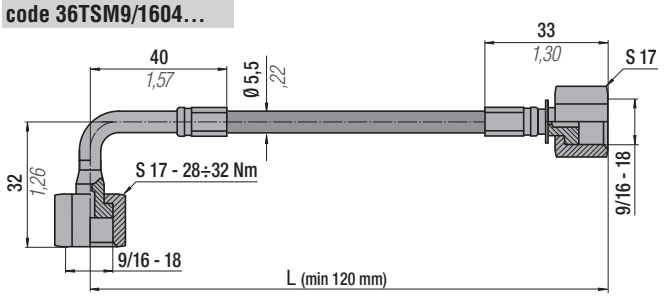

code 36TSM9/1605...

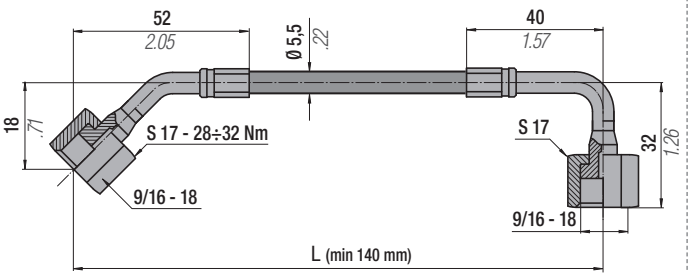

code 36TSM9/1606...

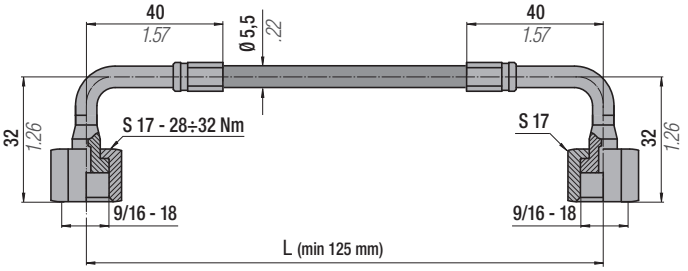

Technical data				
"L" min	See each type	-	Volume	3 ml/metre
Operation pressure	630 bar	*9135 psi*	Dimension	5/64'' (external ø 5,5 mm)
Burst Pressure	1890 bar at 20°C	*27400 psi at 68°F*	Material	Thermoplastic
R (bending radius)	20 mm	*0,79 in*	Standard	-
Operation temperature	-40+ 100°C	*-38 +212°F*	Outer casing	Perforated

Lunghezza richiesta comprensiva di raccordi terminali
Length upon request including end hose fittings
Länge Anfrage einschließlich Ende Schlaucharmaturen

Longueur requise, y compris des raccords d'extrémité
Longitud requerida, incluyendo accesorios de los extremos
Comprimento necessário incluindo todos os acessórios

L = 10 mm upword increase - Example (36TSM9/1601 0300; 36TSM9/1605 0310; ...)

code: 36FF06A

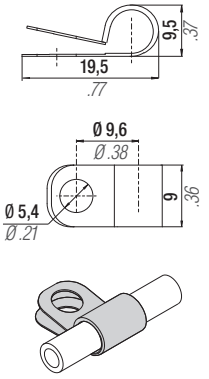

HOSE FITTINGS

code 36P9/1601

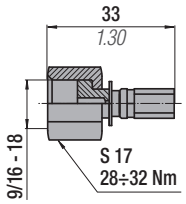

code 36P9/1602

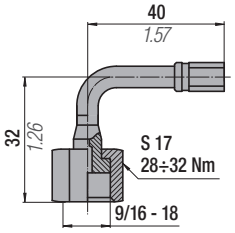

code 36P9/1603

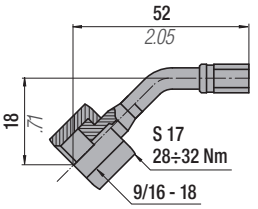

*All dimensions in **mm**/inch*

Raccordi tubo-cilindro/pannello - Hose-cylinder/panel connections - Anschlüsse zwischen schlauch und Zylinder/Kontrollarmatur - Raccords tuyau-cylindre/tableau - Conexiones sistema de cilindros/panel - Racord tubo-cilindro/painel

code PA-S
Port Adapter - Straight

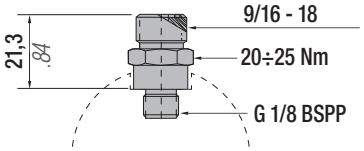

code PA-AS
Port Adapter - Angle Swivel

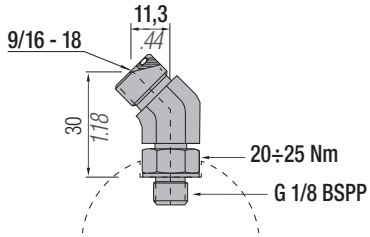

code PA-E
Port Adapter - Elbow

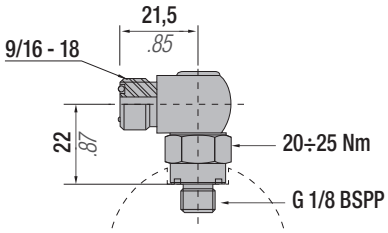

code PA-BTS
Port Adapter - Brach Tee Swivel

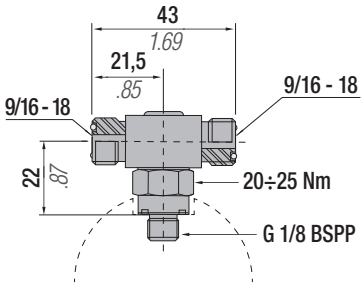

code PA-RT
Port Adapter - Rum Tee

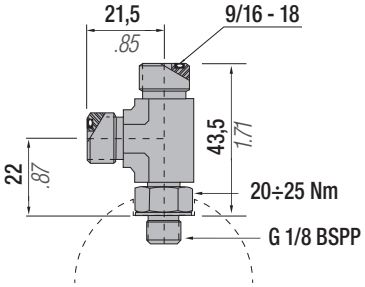

code PA-TWS
Port Adapter - Two Way Swivel

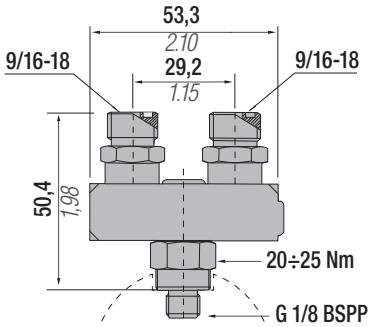

code PA-MWS
Port Adapter - Multi Way Swivel

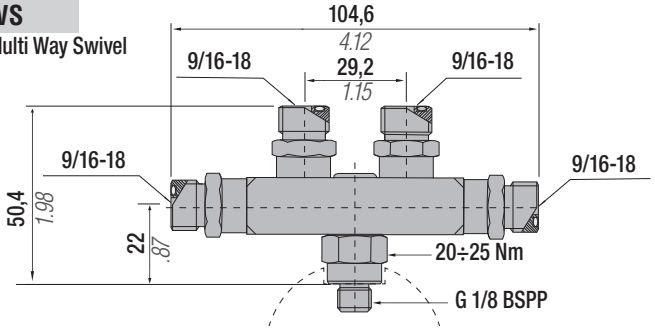

code PA-M6

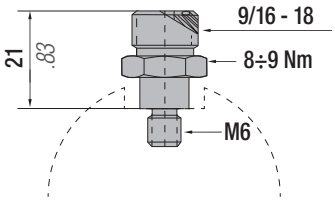

Raccordi di derivazione - Offtake connections - Anschlüßstutzen - Raccords de dérivation - Racores - Racord de derivação

code SN-A
Swivel Nut-Angle

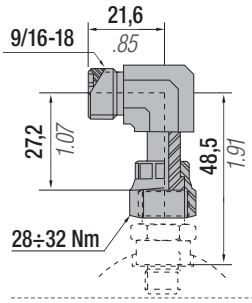

code SN-BT
Swivel Nut-Branch Tee

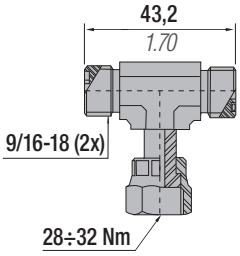

code SN-RT
Swivel Nut-Run Tee

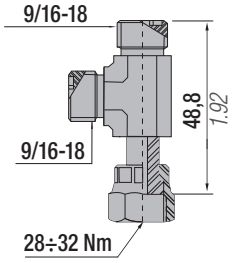

Raccordi tubo-tubo - Hose-hose connections - Anschlüsse zwischen Schlauch und Schlauch - Raccords tuyau-tuyau - Conexiones de tubo a tubo - Racord tubo-tubo

code F-U
Fitting-Union

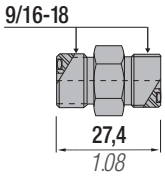

code F-E
Fitting-Elbow

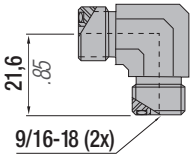

code F-T
Fitting-Tee

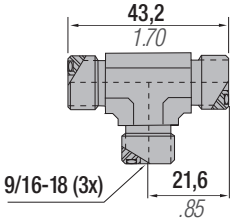

code F-C
Fitting-Cross

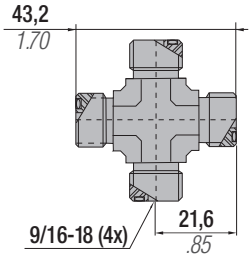

*All dimensions in **mm**/inch*

HY 250 ORFS - O-ring face seal Hose Ø 12 mm

(available in the North America market only)

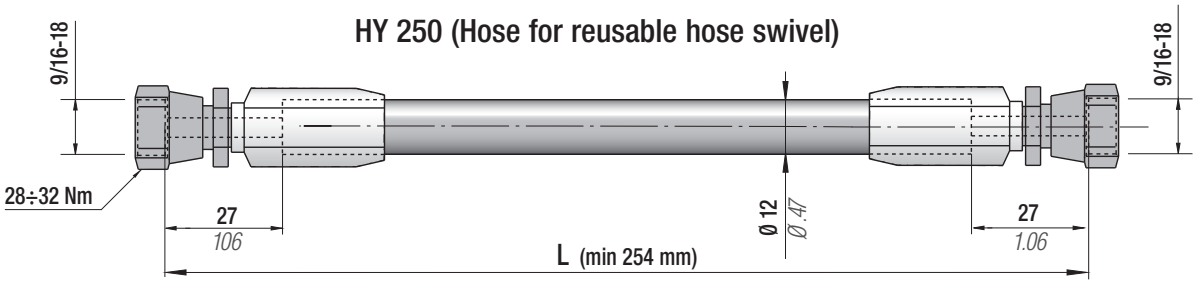

Technical data				
"L" min	See above	*10,0 in*	Volume	31 ml/metre
Operation pressure	190 bar	*2750 psi*	Dimension	1/4'' (external ø 12 mm)
Burst Pressure	758 bar at 20°C	*11000 psi at 68°F*	Material	Thermoplastic
R (bending radius)	38 mm	*1,5 in*	Standard	SAE 100R7
Operation temperature	-40+ 100°C	*-38 +212°F*	Outer casing	Perforated

Lunghezza richiesta comprensiva di raccordi terminali
Length upon request including end hose fittings
Länge Anfrage einschließlich Ende Schlaucharmaturen
Longueur requise, y compris des raccords d'extrémité
Longitud requerida, incluyendo accesorios de los extremos
Comprimento necessário incluindo todos os acessórios

L = 10 mm upword increase - Example (36HY40005 12''(305)

REUSABLE HOSE SWIVELS

code SHF-R
Straight Swivel

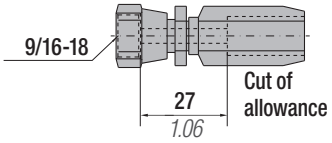

code HF-R90
90° Swivel

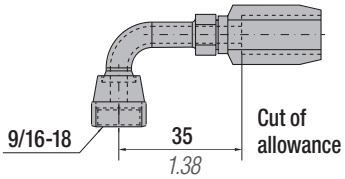

code HF-R45
45° Swivel

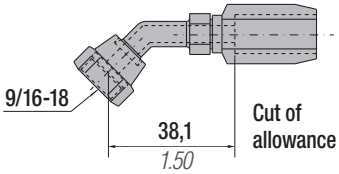

*All dimensions in **mm**/inch*

THIS PAGE IS INTENTIONALLY LEFT BLANK

ORFS - O-ring face seal
Hose Ø 12,7 mm

SPECIAL SPRINGS

code 36HY40001...

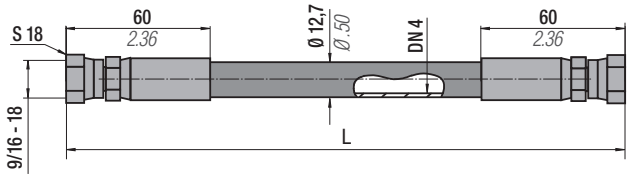

code 36HY40002...

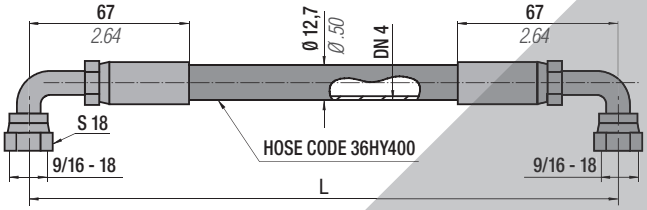

code 36HY40003...

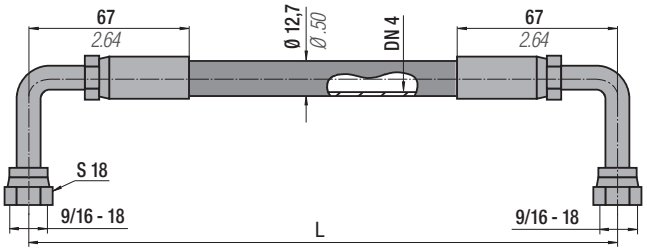

code 36HY40004...

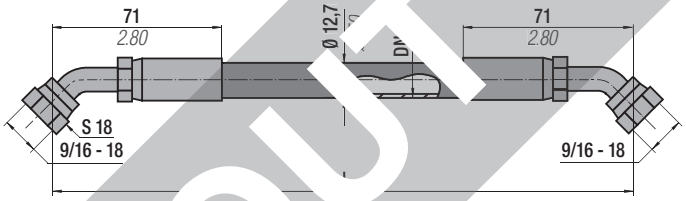

code 36HY40005...

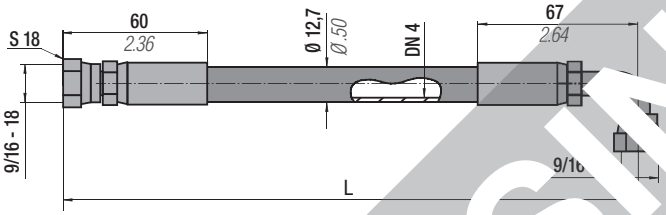

code 36HY40006...

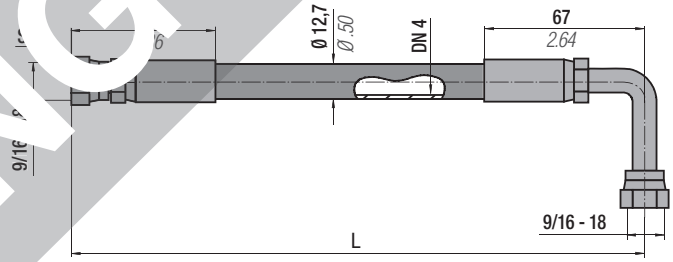

code 36HY40007...

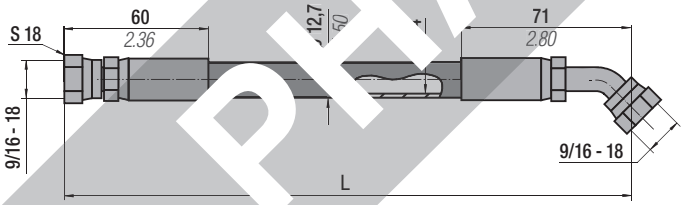

code 36HY40008...

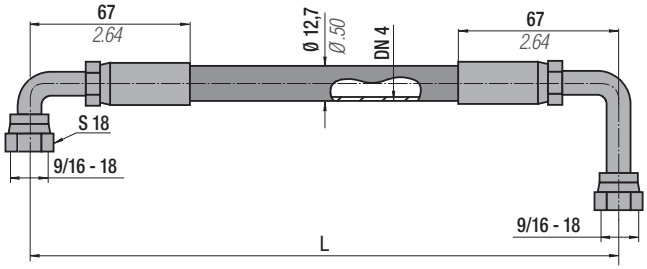

code 36HY40009...

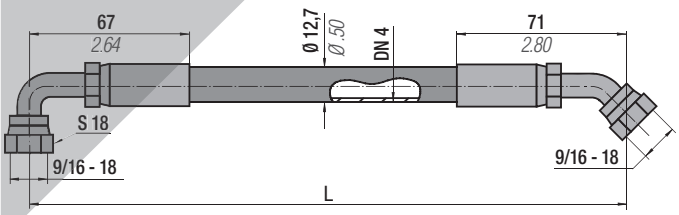

code 36HY40010...

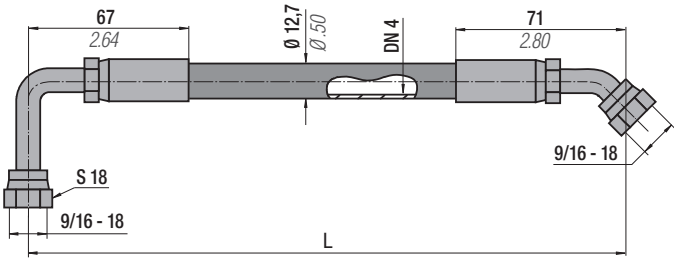

PHASING OUT

*All dimensions in **mm**/inch*

ORFS - O-ring face seal
Hose Ø 12,7 mm

HY 400

code 36HY40011...

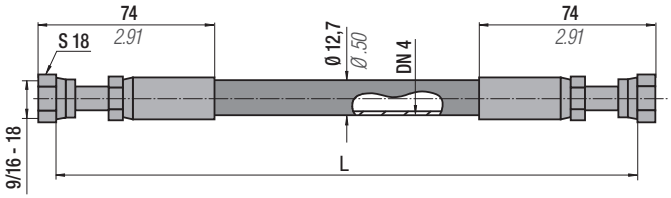

code 36HY40012...

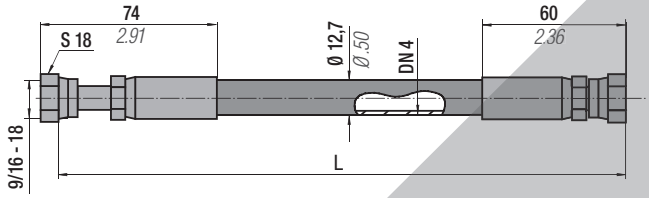

code 36HY40013...

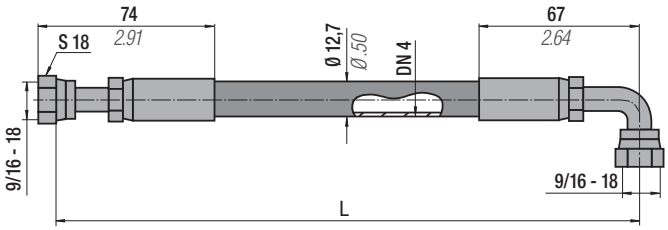

code 36HY40014...

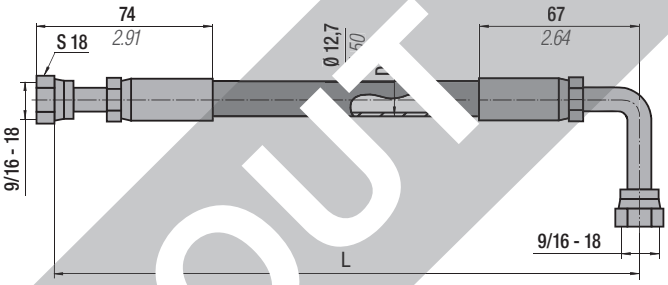

code 36HY40015...

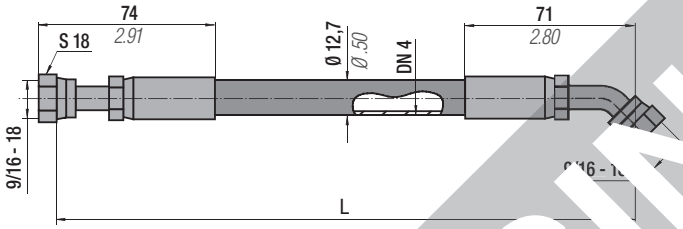

code: 36FF13A

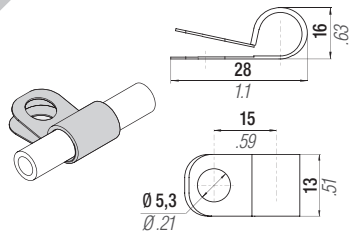

PHASING OUT

Technical data				
"L" min	255 mm	[illegible]	[illegible]lume	32 ml/metre
Operation pressure	345 bar	[illegible]	Dimension	1/4" (external ø 12,7 mm)
Burst Pressure	1380 bar at 20°[illegible]	2001[illegible]	Material	Thermoplastic
R (bending radius)	51 mm	2.[illegible]	Standard	SAE 100R8
Operation temperature	-40+[illegible]0°C	[illegible]8+2[illegible]F	Outer casing	Perforated

standard L = 255 m[illegible] 5 m[illegible]word increase - Example (36HY40016 0300; 36HY40016 0305; ...)

Lunghezza richiesta comprensiva di raccordi terminali
Length upon request including end hose fittings
Länge Anfrage einschließlich Ende Schlaucharmaturen
Longueur requise, y compris des raccords d'extrémité
Longitud requerida, incluyendo accesorios de los extremos
Comprimento necessário incluindo todos os acessórios

HOSE FITTINGS

code S-F — Straight Swivel

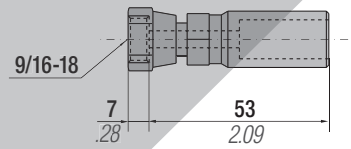

code S-FL — Straight Long Swivel

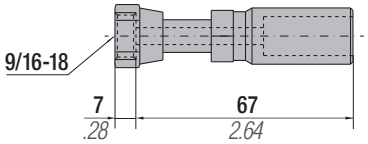

code H-F90L — 90° Long Swivel

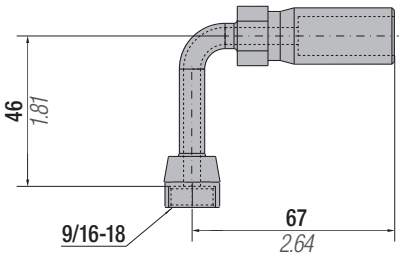

code H-F — 90° Swivel

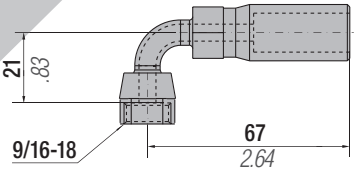

code H-F45 — 45° Swivel

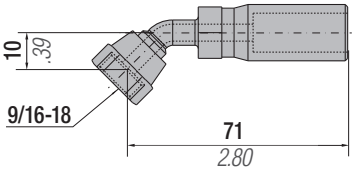

*All dimensions in **mm**/inch*

CONTROL PANEL CP01A

IT

Micro pannello di controllo composto da base in alluminio, manometro, valvola per caricamento e scaricamento, tappo di rottura sovrappressione e protezione in acciaio. Idoneo per le gestione di impianti collegati realizzati con micro hose e micro connections. 16 uscite M6.

EN

Micro control panel with aluminium base, gauge, charging and discharging valve, overpressure rupture plug and steel protection. Suitable for hose systems equipped with micro hose and micro connections. 16 M6 ports.

DE

Micro-Kontrollarmatur mit Aluminiumsockel, Manometer, Auffüll- und Ablassventil, Überdruck Bruch Stecker und Stahlabdeckung. Geeignet für Verbundsysteme mit Micro-Kupplung und -Schläuchen. 16 M6 Anschlüsse.

FR

Mini panneau de contrôle avec base aluminium, équipé de manomètre, valve de chargement et déchargement, bouchon de rupture de surpression et protection acier ; il est adapté aux systèmes connectés équipés de mini tuyaux et mini connexions. 16 Portes M6.

ES

Micropanel de control con base en aluminio, manómetro, válvula de carga y descarga, enchufe de la ruptura de sobrepresión y protección en acero. Idóneo para la gestión de instalaciones de cilindros conectados entre sí con micro mangueras y micro conectores. 16 salidas M6.

PT

Micro Painel de Controlo com base em alumínio, manómetro, válvula de carga e descarga, plugue ruptura sobrepressão e protecção em aço. Adequado para sistemas de mangueiras, equipado com micro mangueiras e micro conexões. 16 saídas M6.

code	Pressure Gauge	Rupture Plug	Easy Manifold p.241
39CP01A	bar/psi	✓	✓

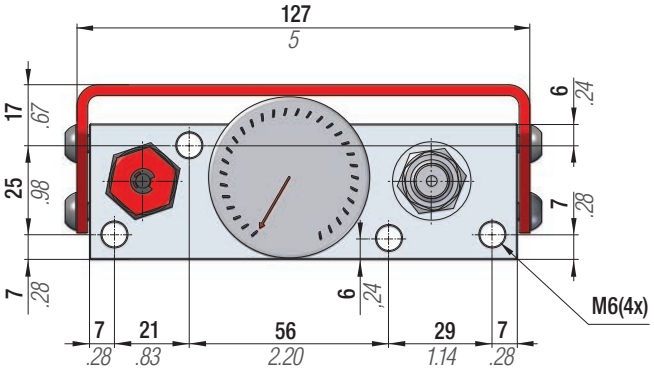

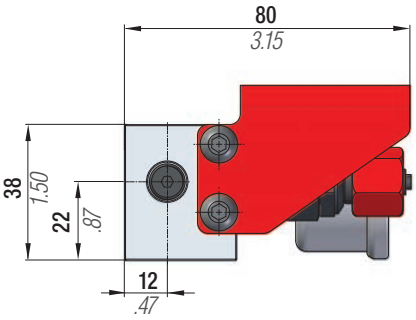

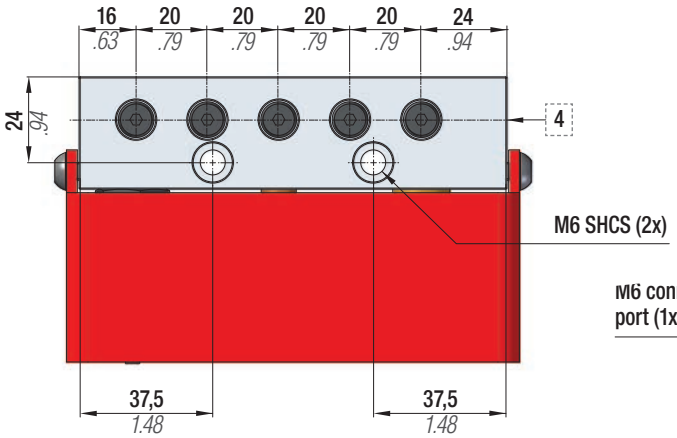

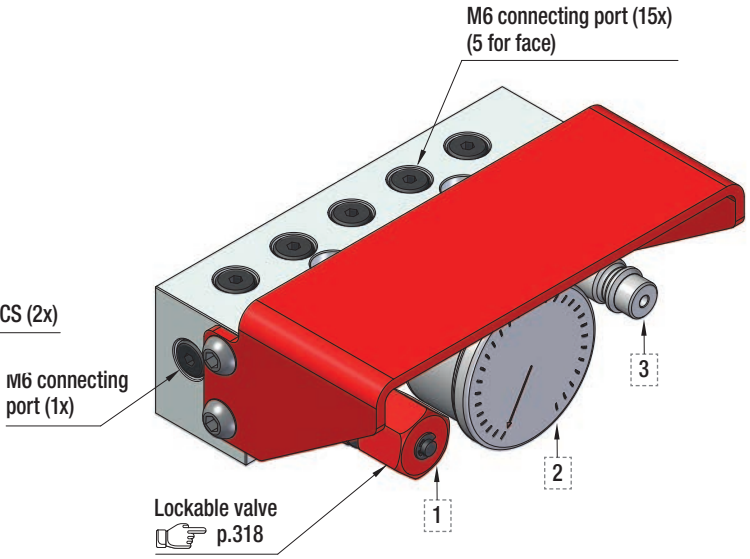

1	Valvola di scarico Discharging valve Auslaßventil Valve de déchargement Válvula de desahogo Válvula de descarga	2	Manometro 0÷ 620 bar Pressure gauge 0÷620 bar Manometer 0÷ 620 bar Manomètre 0÷ 620 bar Manómetro 0÷ 620 bar Manómetro 0÷ 620 bar	3	Innesto rapido di caricamento Cejn Quick coupling for charging Cejn Steckkegel Cejn Accouplement rapide mäle Cejn Acoplamiento rápido para carga Cejn União rápida para carregamento Cejn	4	Tappo di rottura sovrappressione Over pressure rupture plug Überdruck Bruch Stecker Bouchon de rupture de surpression Enchufe de la ruptura de sobrepresión Plugue ruptura sobrepressão

CONTROL PANEL CPVC

IT

Pannello standard per caricamento, regolazione, scaricamento e controllo della pressione nel sistema collegato. Consiste in una base provvista di manometro, valvola di caricamento e scaricamento, 3 uscite, protezione in acciaio. Può essere equipaggiato con disco di rottura (opzionale).

EN

Standard control panel to charge, adjust and check the pressure in the connected system. It consists of a plate with pressure gauge, charging and discharging valve, 3 outlets, steel case and can be equipped with a rupture disc (optional).

DE

Standard-Schalttafel zur Ladung, Regulierung, Entladung und Kontrolle des Drucks im angeschlossenen System. Bestehend aus einer Basis mit Manometer, Lade- und Entladeventil, 3 Ausgängen sowie Schutz aus Stahl. Kann mit einer Berstscheibe ergänzt werden (Zubehör).

FR

Panneau standard pour le chargement, le réglage, le déchargement et le contrôle de la pression dans le système relié. Il est formé par une embase équipée de manomètre, vanne de chargement et déchargement, 3 sorties, protection en acier. Il peut être équipé d'un disque de rupture (option).

ES

Panel standard para la carga, regulación, descarga y control de la presión en sistemas de cilindros conectados. Consiste en una base con un manómetro Válvula de carga y descarga, 3 salidas, protección en acero. Puede equiparse con disco de ruptura (opcional).

PT

Painel standard para carga, regulação, descarga e controlo da pressão no sistema ligado. É composto por uma base com manómetro. Válvula de carga e de descarga, 3 saídas, protecção em aço. Pode ser equipado com disco de rotura (opcional).

code	Pressure Gauge	Rupture Plug	Easy Manifold ☞ p.241
39CPVC	bar/psi	✗	✓
39CPVC + 39DR004	bar/psi	✓	✓
39CPVC + 39TS460	bar/psi	✓	✓

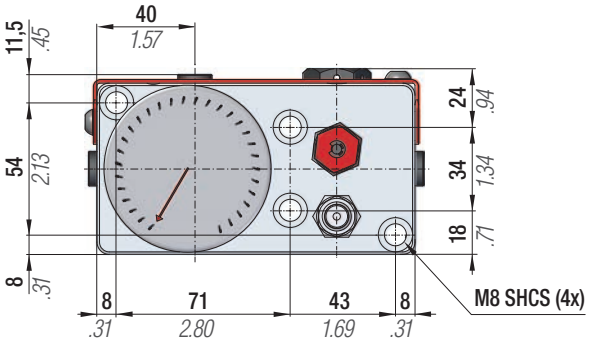

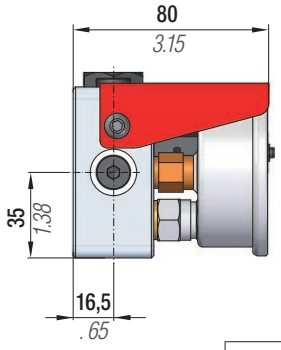

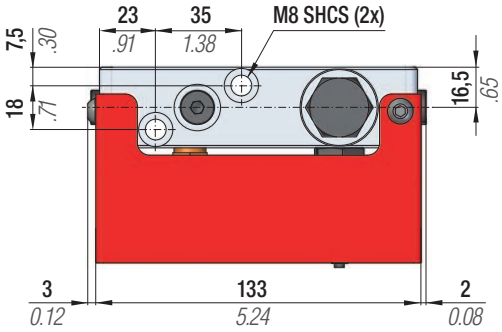

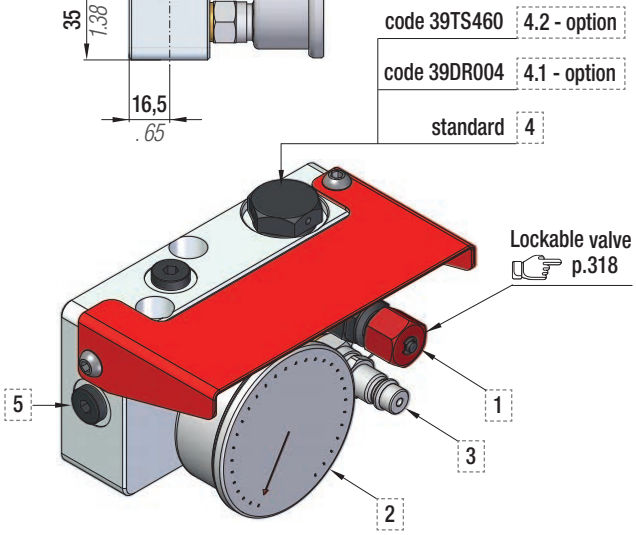

1	Valvola di scarico Discharging valve Auslaßventil Valve de déchargement Válvula de desahogo Válvula de descarga	2	Manometro 0÷ 620 bar Pressure gauge 0÷620 bar Manometer 0÷ 620 bar Manomètre 0÷ 620 bar Manómetro 0÷ 620 bar Manómetro 0÷ 620 bar	3	Innesto rapido di caricamento Cejn Quick coupling for charging Cejn Steckkegel Cejn Accouplement rapide mãle Cejn Acoplamiento rápido para carga Cejn União rápida para carregamento Cejn	4	Tappo di chiusura M20 Closing plug M20 Verschlussstopfen M20 Bouchon de fermeture M20 Tapon de cierre M20 Plugue de fechamento M20
4.1	Tappo di rottura sovrappressione Over pressure rupture plug Überdruck Bruch Stecker Bouchon de rupture de surpression Enchufe de ruptura de sobrepresión Plugue ruptura sobrepressão	4.2	Tappo di sicurezza sovrapressione CE Overpressure safety plug CE Überdruck Sicherheitsstecker CE Bouchon de sécurité surpression CE Enchufe de seguridad sobrepresion CE Bujão de segurança sobrepressão CE	5	Fori di collegamento 1/8"G (4x) 1/8"G connecting ports (4x) Anschlussöffnung 1/8"G (4x) Trous de raccordement 1/8"G (4x) Agujeros de conexión 1/8"G (4x) Furo de conexão 1/8"G (4x)		

code: 39TS460

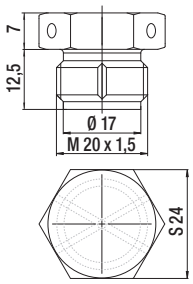

CONTROL PANEL MCPC / CP19A

Replace code 39MCPB

SPECIAL SPRINGS

IT

Il mini pannello di controllo Special Springs, grazie a un design miniaturizzato e unico, offre una grande flessibilità d'uso che aumenta con le unità addizionali AUMCP. Consiste in un blocchetto di alluminio provvisto di manometro, valvola di caricamento e scaricamento, 4 uscite, valvola d'intercettazione e tappo di rottura sovrappressione.

EN

The Special Springs mini control panel, thanks to its unique miniaturized design, offers wide flexibility of use, increased when combined with additional AUMCP units. It consists of a aluminium block with pressure gauge, charging and discharging valve, 4 outlets, on-off valve and overpressure rupture plug.

DE

Die Mini-Steuerung Special Springs bietet dank ihres miniaturisierten und einzigartigen Designs größte Benutzungsflexibilität, die mit den zusätzlichen AUMCP-Einheiten noch erhöht wird. Bestehend aus einem aluminiumblock mit Manometer, Lade- und Entladeventil, 4 Ausgängen, Sperrventil und Überdruck Bruch Stecker.

FR

Grâce à une conception miniaturisée et unique, le mini-panneau de contrôle Special Springs offre une grande souplesse d'utilisation qui augmente avec les unités supplémentaires AUMCP. Il est formé par une plaque en aluminium équipée de manomètre, vanne de chargement et déchargement, 4 sorties, vanne d'arrêt et Bouchon de rupture surpression.

ES

El mini-panel de control Special Springs, gracias a su exclusivo diseño miniaturizado, oferece una gran flexibilidad, que aumenta con las unidades adicionales AUMCP. Consiste en una placa de aluminio con manómetro, válvula de carga y descarga, 4 salidas, válvula de interceptación y enchufe de ruptura de sobrepresión.

PT

O mini-painel de controlo Special Springs, graças a um design miniaturizado e exclusivo, oferece uma grande flexibilidade de utilização que aumenta com as unidades adicionais AUMCP. É composto por um bloco em alumínio com manómetro, válvula de carga e de descarga, 4 saídas , válvulade interceptação e plugue ruptura sobrepressão.

code	Pressure Gauge	Rupture Plug	Shut off valve	Easy Manifold p.241
39MCPC	bar/psi	✓	✓	✓
39CP19A	bar/psi	✓	✗	✓

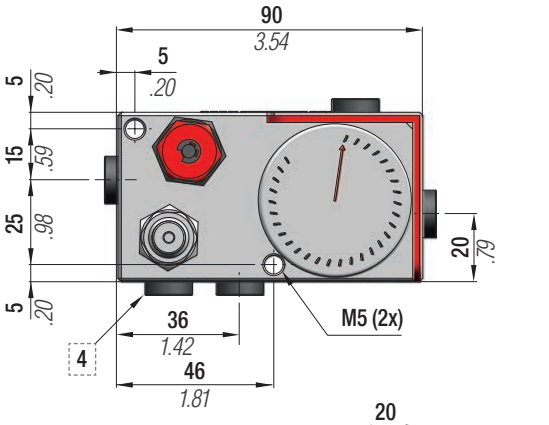

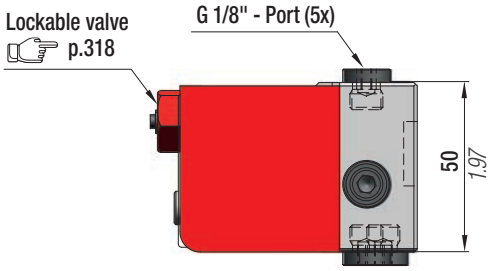

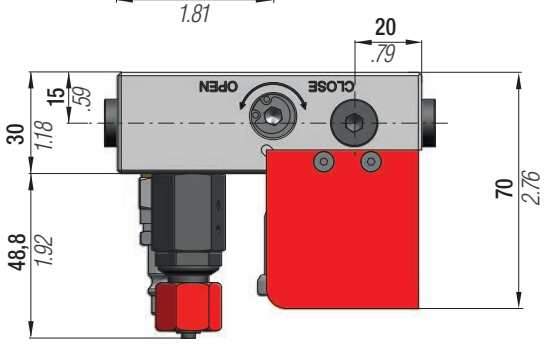

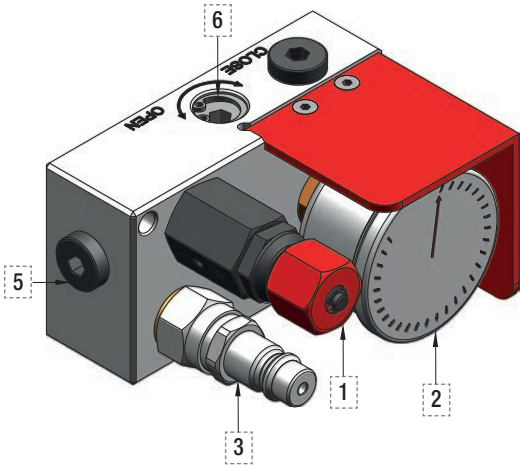

1	Valvola di scarico Discharging valve Auslaßventil Valve de déchargement Válvula de desahogo Válvula de descarga	2	Manometro 0÷ 620 bar Pressure gauge 0÷620 bar Manometer 0÷ 620 bar Manomètre 0÷ 620 bar Manómetro 0÷ 620 bar Manómetro 0÷ 620 bar

3	Innesto rapido di caricamento Cejn Quick coupling for charging Cejn Steckkegel Cejn Accouplement rapide mäle Cejn Acoplamiento rápido para carga Cejn União rápida para carregamento Cejn	4	Tappo di rottura sovrappressione Over pressure rupture plug Überdruck Bruch Stecker Bouchon de rupture de surpression Enchufe de la ruptura de sobrepresión Plugue ruptura sobrepressão	5	Fori di collegamento 1/8"G (5x) 1/8"G connecting ports (5x) Anschlussöffnung 1/8"G (5x) Trous de raccordement 1/8"G (5x) Agujeros de conexión 1/8"G (5x) Furo de conexão 1/8G (5x)	6	Valvola di intercettazione Shut off valve Sperrventil Valve d'arrêt Válvula de interceptación Válvula de fecho

CONTROL PANEL AUMCP

IT

Unità addizionali per minipannello MCPC. Ideali per gestire impianti o cilindri singoli con pressioni diverse nello stesso stampo. Ogni unità include un manometro, una valvola di intercettazione e 1 uscita. Combinazione massima prevista 1 MCPC + 4 AUMCP.

EN

Additional units for the mini control panel MCPC. Ideal for operating hosed systems or single cylinders with different pressures in the same mould. Each unit includes pressure gauge, on-off valve and 1 outlet. Designed for a maximum combination of 1 MCPC + 4 AUMCP.

DE

Zusätzliche Einheiten für die Ministeuerung MCPC. Ideal zur Verwaltung von Anlagen oder einzelnen Zylindern, die beim selben Formprozess verschiedene Druckwerte aufweisen. Jede Einheit ist mit einem Manometer, einem Sperrventil und einem Ausgang ausgestattet.Maximal mögliche Kombination: 1 MCPC + 4 AUMCP.

FR

Unités supplémentaires pour le mini-panneau MCPC. L'idéal pour gérer des installations ou des cylindres seuls sous des pressions différentes dans le même moule. Chaque unité inclut un manomètre, une vanne d'arrêt et 1 sortie. Combinaison maximum prévue: 1 MCPC + 4 AUMCP.

ES

Unidades adicionales para mini-panel MCPB. Ideales para la gestión de sistemas o de cilindros aislados con presiones distintas en un mismo molde. Cada unidad incluye un manómetro, una válvula de interceptación y 1 salida. Combinación máxima prevista 1 MCPC + 4 AUMCP.

PT

Unidade adicional para mini-painel MCPC. Ideais para gerir instalações ou cilindros individuais com pressões diferentes na mesma ferramenta. Cada unidade inclui um manómetro, uma válvula de intercepção e 1 saída. Combinação máxima prevista 1 MCPC + 4 AUMCP.

code	Pressure Gauge	Rupture Plug	Easy Manifold
39AUMCP	bar/psi	✓	✗

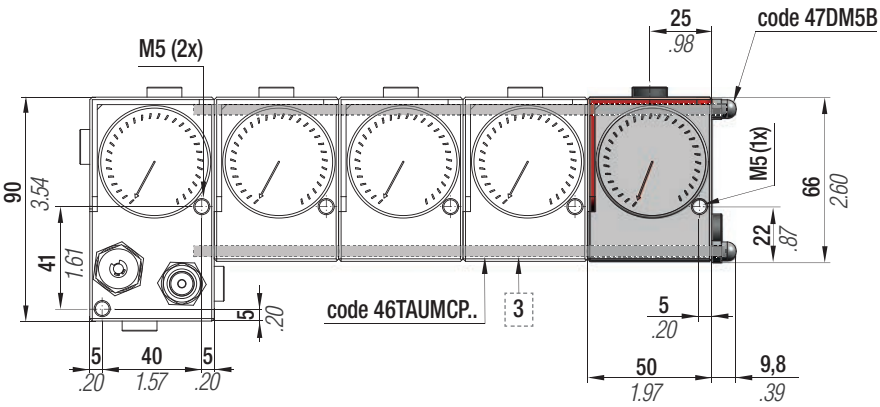

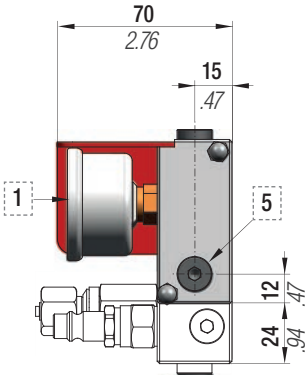

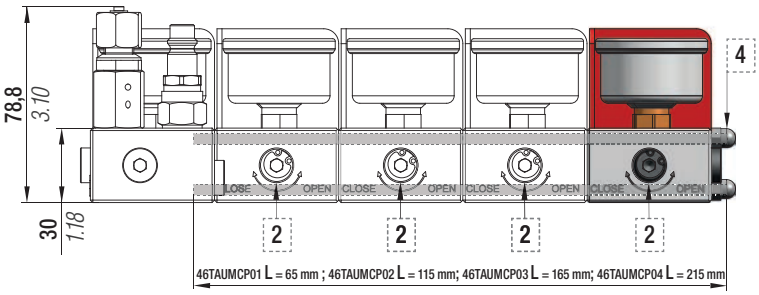

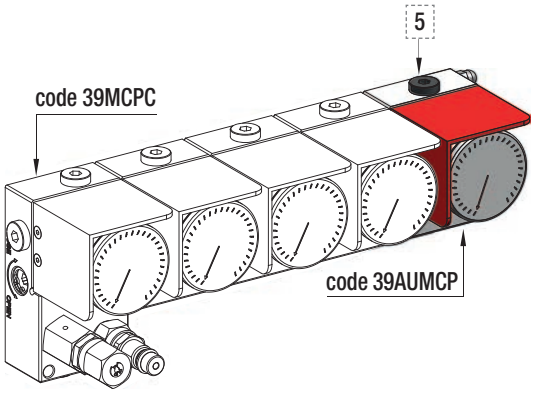

1	Manometro 0÷ 620 bar Pressure gauge 0÷620 bar Manometer 0÷ 620 bar Manomètre 0÷ 620 bar Manómetro 0÷ 620 bar Manómetro 0÷ 620 bar	2	Valvola di intercettazione Shut off valve Sperrventil Valve d'arrêt Válvula de interceptación Válvula de fecho	3	Tirante (2x) Tie rod (2x) Zugstange (2x) Tirant (2x) Tirante (2x) Barra de ligação(2x)	4	Dado cieco (2x) Cap nut (2x) Hutmutter (2x) Écrou borgne (2x) Tuerca de sombrerete (2x) Porca cega (2x)	5	Fori di collegamento 1/8"G (2x) 1/8"G connecting ports (2x) Anschlussöffnung 1/8"G (2x) Trous de raccordement 1/8"G (2x) Agujeros de conexión 1/8"G (2x) Furo de conexão 1/8G (2x)

Ordering example: **(1) 39MCPC + (4) 39AUMCP + 39TAUMCP04**

Q.ty — Q.ty

Micro control panel — Additional units — Tie rod(2x) + Cap nut(2x)

Ordering options code

(1) 39MCPC + (1) 39AUMCP + 39TAUMCP01
(1) 39MCPC + (2) 39AUMCP + 39TAUMCP02
(1) 39MCPC + (3) 39AUMCP + 39TAUMCP03
(1) 39MCPC + (4) 39AUMCP + 39TAUMCP04

CONTROL PANEL CP02A / CP08A / CP11A ■

(Ford, MABEC, Nissan, Renault and GM North America die Standard)

IT

Pannello di controllo secondo standard Ford e GM Nord America. Base in alluminio provvista di manometro, valvola di caricamento e scaricamento, adattatore 9/16-18 UNF ORFS, tappo di rottura sovrapressione e protezione in acciaio. 3 uscite G1/8" per gestione sistemi collegati.

EN

Control panel according to Ford and GM North America standards. Made up of aluminium base. Gauge, charging and discharging valve, 9/16-18 UNF ORFS adapter, over pressure rupture plug and steel protection. 3 ports G1/8".

DE

Kontrollarmatur gem. Ford und GM North America Normen. Aufgebaut auf Aluminiumsockel. Manometer, Auffüll- und Ablassventil, 9/16-18 UNF ORFS Adapter, Überdruck Bruch Stecker und Stahlabdeckung. 3 G1/8" Anschlüsse.

FR

Panneau de contrôle selon les standards Ford et GM, Amérique du Nord, base en aluminium. Manomètre, valve de chargement et déchargement, adaptateur 9/16-18 UNF ORFS, Bouchon de rupture de surpression et protection acier, 3 ports G1/8".

ES

Panel de control según standard Ford y GM Norte America. Base de aluminio con manómetro, válvula de carga y descarga, adaptador 9/16-18 UNF ORFS, Enchufe de ruptura de sobrepresión y protección en acero. 3 salidas G1/8'' para sistemas de cilindros conectados.

PT

Painel de controlo de acordo com os Standards Ford e GM América do Norte. Fabricado a partir de uma base de alumínio, manómetro, válvula de carga e descarga,adaptador ORFS 9/16-18 UNF, Plugue ruptura sobrepressão e protecção em aço. 3 saidas G1/8'' para sistemas de gestão relacionados.

code	Pressure Gauge	Rupture Plug	Easy Manifold
39CP02A	bar/psi	✓	✗
39CP08A	bar/MPa	✓	✗
39CP11A ■	bar/psi	✗	✗

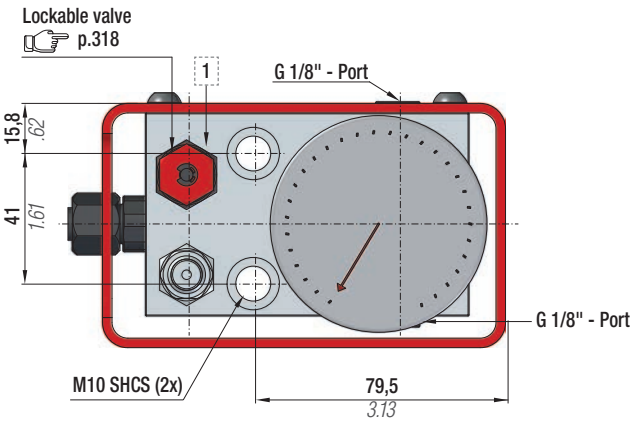

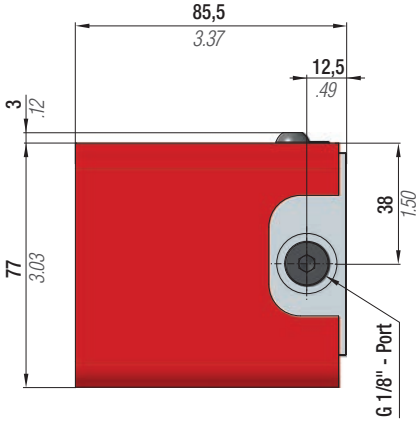

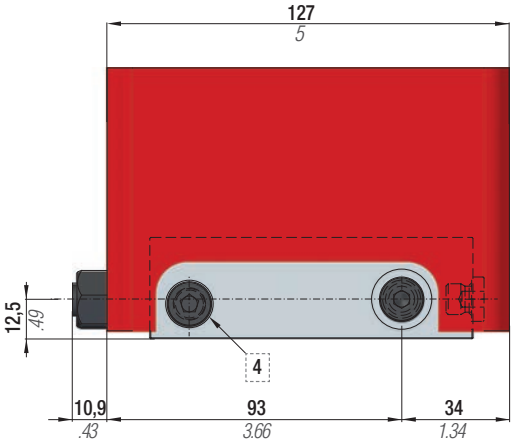

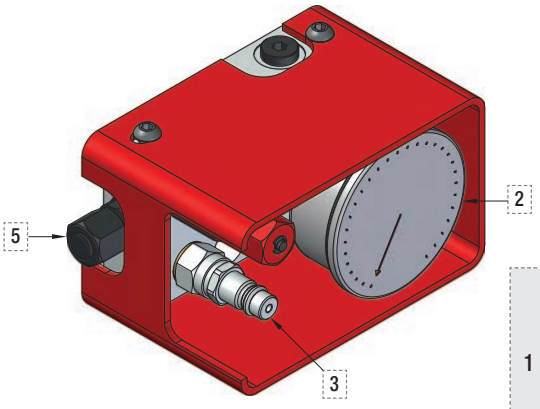

1	Valvola di scarico Discharging valve Auslaßventil Valve de déchargment Válvula de desahogo Válvula de descarga						
2	Manometro 0÷ 620 bar Pressure gauge 0÷ 620 bar Manometer 0÷ 620 bar Manomètre 0÷ 620 bar Manómetro 0÷ 620 bar Manómetro 0÷ 620 bar	3	Innesto rapido di caricamento Cejn Quick coupling for charging Cejn Steckkegel Cejn Accouplement rapide mãle Cejn Acoplamiento rápido para carga Cejn União rápida para carregamento Cejn	4	Tappo di rottura sovrappressione Over pressure rupture plug Überdruck Bruch Stecker Bouchon de rupture de surpression Enchufe de la ruptura de sobrepresión Plugue ruptura sobrepressão	5	Adattatore tenuta frontale 9/16-18 UNF O-Ring Face Seal Adapter 9/16-18 UNF O-ring-Dichtung Adapter 9/16-18 UNF Joint torique adaptateur 9/16-18 UNF O-ring face seal adapter 9/16-18 UNF Adaptador de vedação frontal 9/16-18 UNF

CONTROL PANEL CP03A

IT

Pannello di controllo con base in alluminio ,provvi manometro con valvola di intercettazione, valvola di caricamento e scaricamento, tappo di rottura sovrappressione, protezione in acciaio, 9 uscite da G1/4" per gestione sistemi collegati. La valvola di intercettazione protegge il manometro dalla pressione pulsante durante il funzionamento. Per controllare e regolare la pressione dell'impianto bisogna aprire la valvola di intercettazione del manometro.

EN

Control panel with aluminium base, gauge with shut-off valve, charging and discharging valve, over pressure rupture plug, steel protection. 9 G1/4" ports for hose systems managing. With shut-off valve closed the gauge is protected from pulsating pressure during operation. For checking and adjusting the pressure the interception valve on the gauge must be opened.

DE

Kontrollarmatur mit Aluminiumsockel, Manometer mit Sperrventil, Auffüll-und Ablassventil, Überdruck Bruch Stecker und Stahlabdeckung. 9 G1/4" Anschlüsse zur Steuerung der Verbundsysteme. Das Schließen des Manometers mit dem Sperrventil schützt vor Druckschwankungen während des Arbeitsgangs. Zum Prüfen und Einstellen des Drucks muss das Sperrventil am Manometer geöffnet sein.

FR

Panneau de contrôle avec embase aluminium, équipé de manomètre à valve d'arrêt, valve de chargement et déchargement, bouchon de rupture de surpression et protection acier. Ports 9 G1/4 pour gestion de la connectique. Lorsque la valve d'arrêt est fermée, le manomètre est protégé des vibrations dues à la pression durant les opérations. Pour contrôler et ajuster la pression, il convient d'ouvrir la valve d'interception au niveau du manomètre.

ES

Panel de control con base de aluminio, manómetro con válvula de interceptación (shut-off valve), válvula de carga y descarga, enchufe de ruptura de sobrepresión protección en acero. 9 salidas G1/4" para gestión de sistemas interconectados. Con válvula de interceptación cerrada el manómetro està protegido desde el pico de presión durante un funcionamiento normal. Para controlar y regular la presión abrir la válvula de interceptación del manómetro.

PT

Painel de Controlo com base em alumínio, manómetro com válvula de obturação, plugue ruptura sobrepressão e protecção em aço. 9 furos* G1/4" para uso de sistemas de mangueiras. Com a válvula de obturação fechada fica protegido das pressões existentes durante a operação. Para verificar e ajustar a pressão, a válvula de intercepção no manómetro tem que estar aberta.

code	Pressure Gauge	Rupture Plug	Easy Manifold
39CP03A	bar/psi	✓	✗

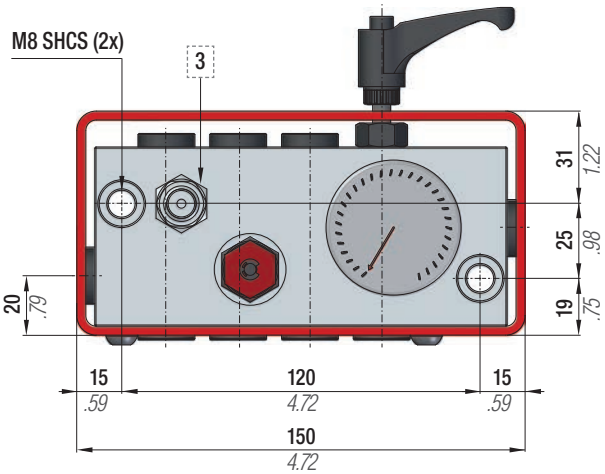

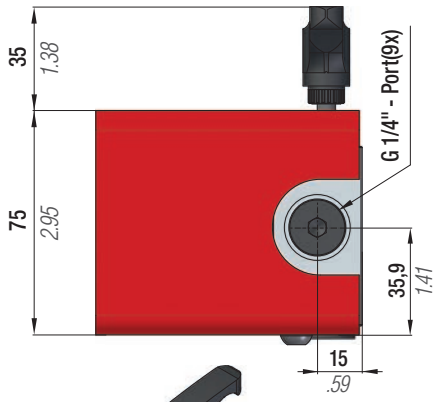

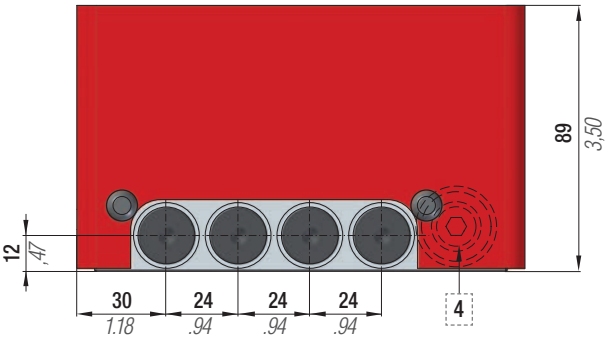

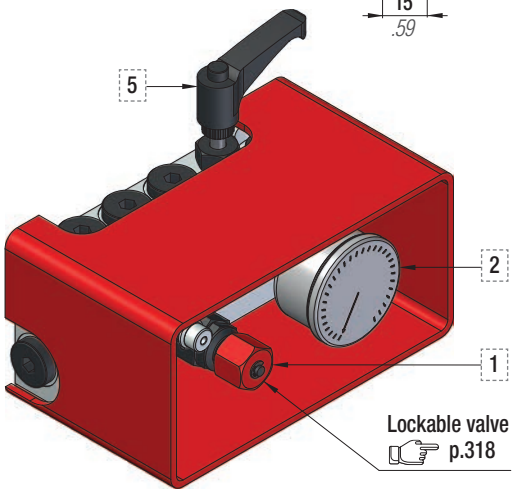

1	Valvola di scarico Discharging valve Auslaßventil Valve de déchargement Válvula de desahogo Válvula de descarga	2	Manometro 0÷ 620 bar Pressure gauge 0÷ 620 bar Manometer 0÷ 620 bar Manomètre 0÷ 620 bar Manómetro 0÷ 620 bar Manómetro 0÷ 620 bar	3	Innesto rapido di caricamento Cejn Quick coupling for charging Cejn Steckkegel Cejn Accouplement rapide mãle Cejn Acoplamiento rápido para carga Cejn União rápida para carregamento Cejn	4	Tappo di rottura sovrappressione Over pressure rupture plug Überdruck Bruch Stecker Bouchon de rupture de surpression Enchufe de la ruptura de sobrepresión Plugue ruptura sobrepressão	5	Valvola di intercettazione Shut off valve Sperrventil Valve d'arrêt Válvula de interceptación Válvula de fecho

CONTROL PANEL CP06A / CP09A

IT

Pannello di controllo con base in alluminio provvisto di sensore di pressione con display digitale, valvola di caricamento e scaricamento, tappo di rottura sovrappressione, protezione in acciaio, 2 uscite da 1/8" gas per gestione sistemi collegati. Collegando direttamente il sensore di pressione al controllo pressa è possibile impostare un range di lavoro desiderato al di fuori del quale il dispositivo invierà un segnale di allarme.

EN

Control panel with aluminium base, equipped with pressure sensor with digital display, charging and discharging valve, over pressure rupture plug, steel protection and two 1/8"gas outlets for hose system managing. By connecting directly the pressure sensor with the Press control unit, it is possible to set a desired working range, outside this value, the controll unit will send an alarm signal.

DE

Kontrollarmatur mit Aluminiumsockel, ausgestattet mit Drucksensor aus digitaler Display, auffüll- und Ablassventil, Überdruck Bruch Stecker, Stahlabdeckung und zwei 1/8" Anschlüsse zur Steuerung der Verbundsysteme. Bei der direkten Verbindung des Drucksensors mit Pressesteuerung es ist möglich eine erwünschte Arbeitsreichweite anzulegen,außerhalb diese Wert wird der Steuerung ein Alarm Signal zu senden.

FR

Panneau de contrôle avec embase en aluminium, équipé de senseur de pression à écran numérique,chargement et déchargement valve, Bouchon de rupture de surpression,protection en acier et deux sorties 1/8 gaz pour la gestion des systèmes connectés. En reliant directement le senseur de pression au système de gestion de la presse on peut établir un éventail désiré des valeurs de travail, au dehors de ces valeurs, le dispositif émettra un signal d'alarme.

ES

Panel de control con base de aluminio, provisto de sensor de presión con display digital, válvula de carga y descarga, Enchufe de ruptura de sobrepresión, protección en acero, 2 salidas de 1/8" gas para gestión de sistemas conectados. Conectando directamente el sensor de presión al control de la prensa es posible determinar unos rangos de trabajo, fuera de los cuales el dispositivo envía una señal de alarma.

PT

Painel de controlo com base de aluminio, equipado com sensor de pressão digital, válvula de carga e descarga, Plugue ruptura sobrepressão, sistema de protecção de aço e duas tomadas de 1/8"gas para ligação a mangeuiras. ao ligar directamente o sensor de pressão com a unidade de controlo, é possivél definir o funcionamento desejado, fora destes valores, a unidade de controlo envia um sinal de alarme.

code	Pressure Gauge	Rupture Plug	Easy Manifold
39CP06A with 59CD01A	bar/psi	✓	✗
39CP09A with 59CR01A	bar/psi	✓	✗

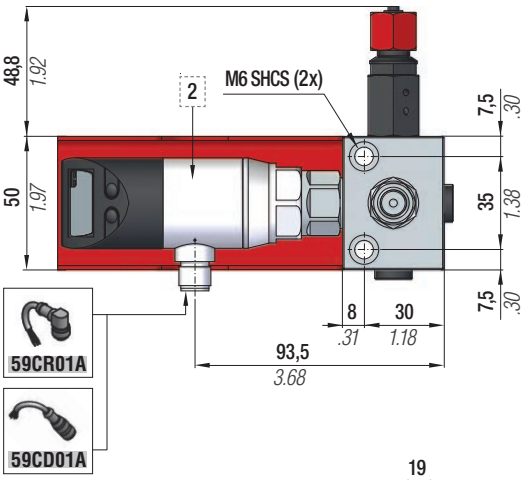

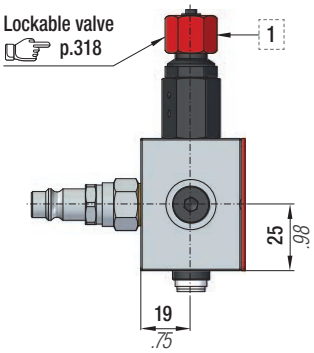

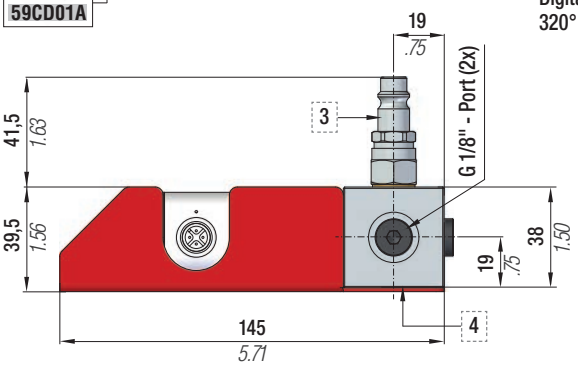

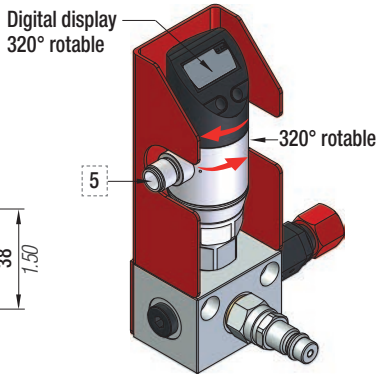

Technical data	
Electrical connector type	M12x1 - Male (4-pin)
Pressure connection	G 1/4" DIN 3852
Nominal pressure	0 - 600 bar
Burst pressure	1100 bar
Operating voltage Uo	18...36 V DC
Output current max.	500 mA
No-load supply current Io max	≤ 50 mA
Switching frequency f	200 Hz
Temperature range	- 25°C... + 85°C
Degree of protection as per IEC 60529	IP67 when connected
Output: digital data (switching points only)	2xPNP, NO/NC selection

Always depressurize and disconnect pressure sensors from the power supply before establishing an electrical connection.

Electrical connections	Sensors with switching output	Wire connections color
Supply +	1	Brown
Supply -	3	Blue
Signal +	-	White
Switching output 1	4	Black
Switching output 2	2	-
Shield	Connector housing	-

Sensor circuit diagram with 2 switching outpts

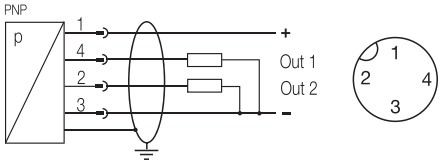

1	Valvola di scarico Discharging valve Auslaßventil Valve de déchargement Válvula de desahogo Válvula de descarga	2	Manometro 0÷ 600 bar Pressure gauge 0÷ 600 bar Manometer 0÷ 600 bar Manomètre 0÷ 600 bar Manómetro 0÷ 600 bar Manómetro 0÷ 600 bar	3	Innesto rapido di caricamento Cejn Quick coupling for charging Cejn Steckkegel Cejn Accouplement rapide mãle Cejn Acoplamiento rápido para carga Cejn União rápida para carregamento Cejn	4	Tappo di rottura sovrappressione Over pressure rupture plug Überdruck Bruch Stecker Bouchon de rupture de surpression Enchufe de la ruptura de sobrepresión Plugue ruptura sobrepressão	5	Connettore elettrico Electrical connector Elektrische Connecteur électrique Eléctrica Conector Conector elétrico

IO-Link ▪ CONTROL PANEL CP20A / CP21A

IT

Pannello di controllo con base in alluminio provvisto di sensore di pressione con display digitale, valvola di caricamento e scaricamento, tappo di rottura sovrappressione, protezione in acciaio, 2 uscite da 1/8'' gas per gestione sistemi collegati. Collegando direttamente il sensore di pressione al controllo pressa è possibile monitorare in continuo il valore della pressione dell'impianto e gestirlo di conseguenza.

EN

Control panel with aluminium base, equipped with pressure sensor and digital display, charging and discharging valve, overpressure rupture plug, steel protective cover and two G 1/8'' ports for managing linked systems. By connecting the pressure sensor to the press control, it is possible to constantly monitor the pressure value of the system and manage it accordingly.

DE

Kontrollarmatur mit Aluminiumgehäuse mit Drucksensor und Digitalanzeige, Befüll- und Ablassventil, Überdruck-Berstsicherung, Schutzabdeckung aus Stahl, zwei G1/8 Anschlussgewinden zur Steuerung von Verbundsystemen. Durch den Anschluss des Drucksensors direkt an die Pressensteuerung ist es möglich, den Druck der Anlage kontinuierlich zu überwachen und entsprechend zu steuern.

FR

Panneau de contrôle avec base en aluminium, équipé d'un capteur de pression et d'un affichage numérique, valve de chargement-déchargement, bouchon de rupture pour surpression, couverture de protection en acier et deux ports G 1/8'' pour la gestion des systèmes connectés. En connectant le capteur de pression à la commande de la presse, il est possible de surveiller en permanence la valeur de pression du système et de la gérer en conséquence.

ES

Panel de control con base de aluminio equipado con sensor de presión con pantalla digital, válvula de carga y descarga, tapón de rotura de sobrepresión, protección de acero, 2 salidas G1/8" para administrar los sistemas conectados. Conectando directamente el sensor de presión al control de la prensa, es posible monitorear continuamente el valor de presión del sistema y administrarlo en consecuencia.

PT

Painel de controle com base em alumínio, fornecido com sensor de pressão e display digital, válvula de carregamento e descarregamento, bujão de rupture para sobre pressão, 2 saídas G1/8" para verificação do sistema. Conectando o painel ao comando da prensa, é possível monitorar continuamente a pressão de trabalho do sistema, monitorando com total segurança o funcionamento.

code	Pressure Gauge	Rupture Plug	Easy Manifold
39CP20A with 59CD01A ▪	bar/psi	✓	✗
39CP21A with 59CR01A ▪	bar/psi	✓	✗

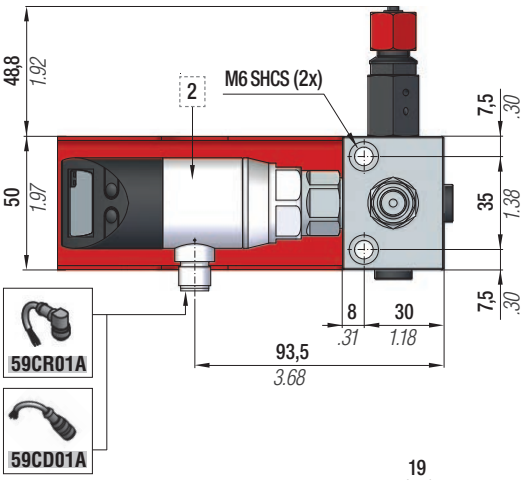

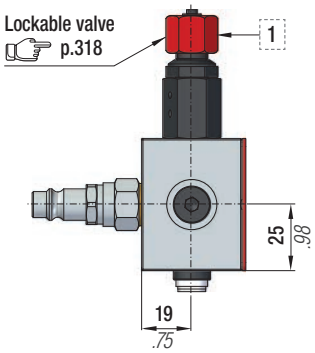

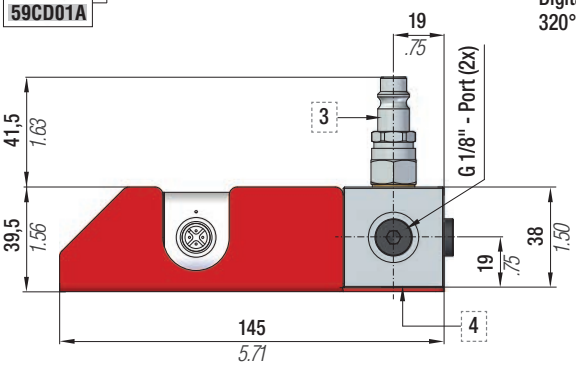

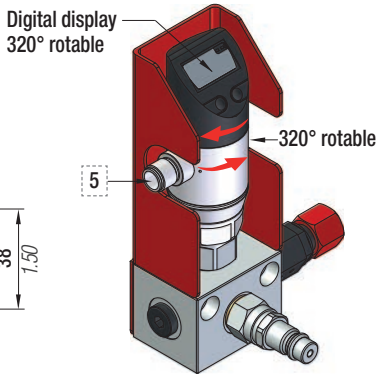

Technical data	
Electrical connector type	M12x1 - Male (4-pin)
Pressure connection	G 1/4" DIN 3852
Nominal pressure	0 - 600 bar
Burst pressure	1000 bar
Operating voltage Uo	18...36 V DC
Output current max.	500 mA
No-load supply current Io max	≤ 50 mA
Switching frequency f	200 Hz
Temperature range	- 25°C... + 85°C
Degree of protection as per IEC 60529	IP67 when connected
Output: digital data (switching points only)	2xPNP, NO/NC selection

Always depressurize and disconnect pressure sensors from the power supply before establishing an electrical connection.

Electrical connections	Standard IO mode	IO link mode	Wire connections color
Supply +	1	1	Brown
Supply -	3	3	Blue
IO - Link	-	4	White
Switching output 1	4	-	Black
4...20 mA	2	2	-
Shield	Connector housing	Connector housing	-

Sensor circuit diagram with analog amperage output

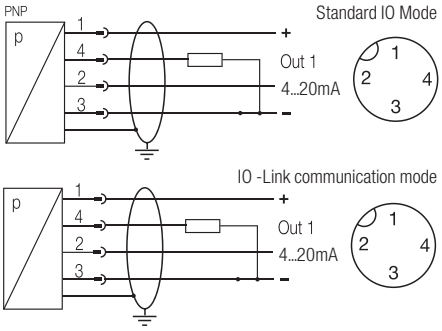

1	Valvola di scarico Discharging valve Auslaßventil Valve de déchargement Válvula de desahogo Válvula de descarga	2	Manometro 0÷ 600 bar Pressure gauge 0÷600 bar Manometer 0÷ 600 bar Manomètre 0÷ 600 bar Manómetro 0÷ 600 bar Manómetro 0÷ 600 bar	3	Innesto rapido di caricamento Cejn Quick coupling for charging Cejn Steckkegel Cejn Accouplement rapide mãle Cejn Acoplamiento rápido para carga Cejn União rápida para carregamento Cejn	4	Tappo di rottura sovrappressione Over pressure rupture plug Überdruck Bruch Stecker Bouchon de rupture de surpression Enchufe de la ruptura de sobrepresión Plugue ruptura sobrepressão	5	Connettore elettrico Electrical connector Elektrische Connecteur électrique Eléctrica Conector Conector elétrico

CONTROL PANEL CP07A / CP10A / CP12A

IT

Pannello di controllo con base in alluminio provvisto di manometro, valvola di caricamento e scaricamento, tappo di rottura sovrapressione, protezione in acciaio, 3 uscite da 1/4" gas e un uscita da 1/8'' gas per gestione sistemi collegati.

EN

Control panel with aluminium base, equipped with gauge, charging and discharging valve, over pressure rupture plug, steel protection and three 1/4“ and one 1/8“ gas outlets for hose system managing.

DE

Kontrollarmatur mit Aluminiumsockel, Manometer, auffüll- und Ablassventil, Überdruck Bruch Stecker, Stahlabdeckung, drei ¼“ und eine 1/8“ Gas Anschlüsse zur Steuerung der Verbundsysteme.

FR

Panneau de contrôle avec base en aluminium pourvu de manomètre, valve de chargement-déchargement, bouchon de rupture de surpression, protection en acier et trois sorties 1/4 gaz et une sortie 1/8 gaz pour la gestion des systèmes connectés.

ES

Panel de control con base de aluminio provisto de manómetro, válvula de carga y descarga, enchufe de la ruptura de sobrepresión, protección en acero, 3 salidas de 1/4 “ gas y 1 salida de 1/8” gas para gestión de sistemas conectados.

PT

Painel de controlo com base de aluminio, equipado com manómetro, válvula de carga e descarga, plugue ruptura sobrepressão, sistema de protecção de aço, três tomadas de 1/4” e uma 1/8”gas para ligação a mangeuiras.

code	Pressure Gauge	Pressure Switch	Rupture Plug	Easy Manifold p.241
39CP07A	bar/psi	✗	✓	✓
39CP10A	bar/psi	✓	✓	✓
39CP12A	bar/psi	✗	✗	✓

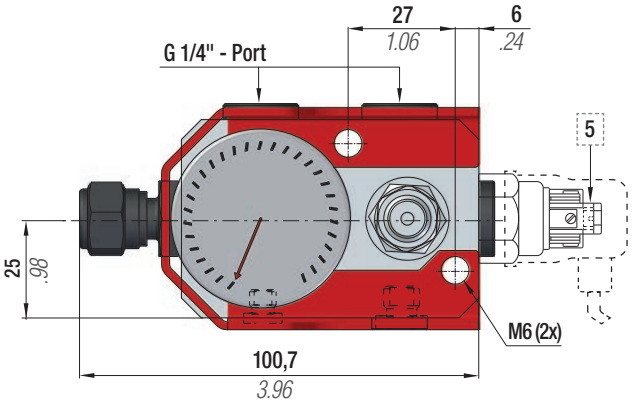

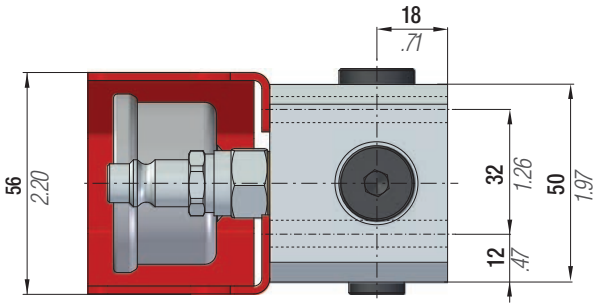

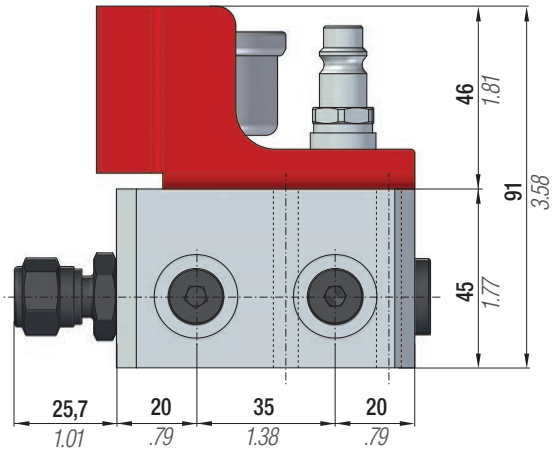

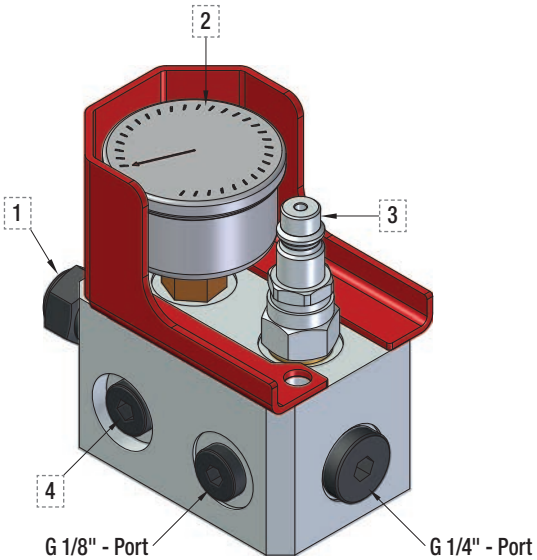

1	Valvola di scarico Discharging valve Auslaßventil Valve de déchargement Válvula de desahogo Válvula de descarga	2	Manometro 0÷ 600 bar Pressure gauge 0÷600 bar Manometer 0÷ 600 bar Manomètre 0÷ 600 bar Manómetro 0÷ 600 bar Manómetro 0÷ 600 bar	3	Innesto rapido di caricamento Cejn Quick coupling for charging Cejn Steckkegel Cejn Accouplement rapide mãle Cejn Acoplamiento rápido para carga Cejn União rápida para carregamento Cejn	4	Tappo di rottura sovrappressione Over pressure rupture plug Überdruck Bruch Stecker Bouchon de rupture de surpression Enchufe de la ruptura de sobrepresión Plugue ruptura sobrepressão	5	Pressostato 50÷300 bar Pressure switch 50÷300 bar Druckwächter 50÷300 bar Pressostat 50÷300 bar Presostato 50÷300 bar Pressostato 50÷300 bar

CONTROL PANEL CP14A
(Daimler standard)

IT

Pannello di controllo a standard Daimler. Base in alluminio provvisto di manometro, valvola di caricamento e scaricamento, pressostato e protezione in acciaio. 3 uscite 7/16-20UNF per gestione sistemi collegati. Può essere equipaggiato con tappo di rottura sovrapressione.

EN

Control panel according to Daimler standard. Made of aluminum base. Equipped with pressure gauge, charging and discharging valve, pressure switch and steel protection. Three 7/16-20UNF gas outlets for managing hose system. It can be equipped with over pressure rupture plug.

DE

Kontrollarmatur nach Daimler-Norm. Aufgebaut auf Aluminiumsockel. Manometer, Auffüll- und Ablassventil, Druckwächter und Stahlabdeckung. Drei 7/16-20UNF Gas Anschlüsse zur Steuerung der Verbundsysteme. Es kann mit Überdruck Bruch Stecker ausgestattet werden.

FR

Panneau de contrôle selon le standard Daimler. Avec base en aluminium, manomètre, valve de chargement-déchargement, pressostat et protection en acier. Trois sorties 7/16-20UNF gaz pour la gestion des systèmes connectés. Il peut être équipé avec bouchon de rupture de surpression.

ES

Panel de control segun standard Daimler. Con base de aluminio, manómetro, válvula de carga y descarga, presostato y protección en acero. 3 salidas de 7/16-20UNF gas para gestión de sistemas conectados. Puede equiparse con enchufe de la ruptura de sobrepresión.

PT

Painel de controlo de acordo com o Standard Daimler. Fabricado a partir de uma base de aluminio. Equipado com manómetro, válvula de carga e descarga, presssostato e sistema de protecção de aço. Três saída de gás 7/16-20UNF para ligação a mangueiras. Pode ser equipado com plugue ruptura sobrepressão.

code	Pressure Gauge	Pressure Switch	Rupture Plug	Easy Manifold p.241
39CP14A	bar/psi	✓	✗	✓
39CP14A + 39DR004	bar/psi	✓	✓	✓
39CP14A + 39TS460	bar/psi	✓	✓	✓

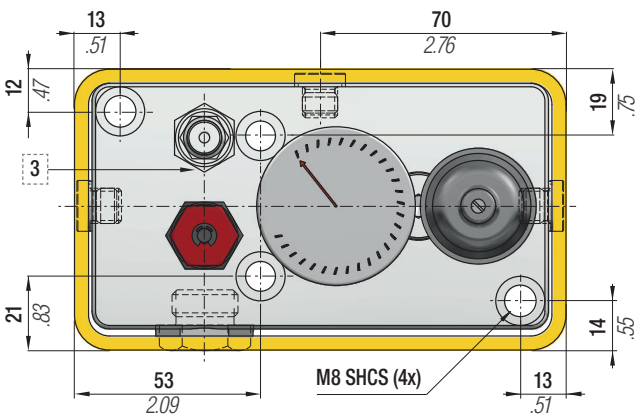

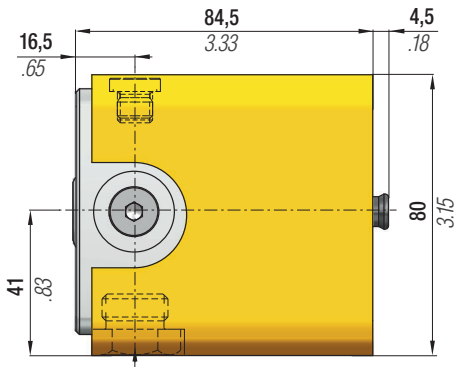

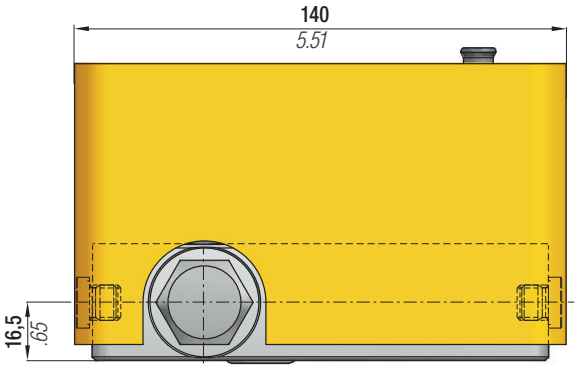

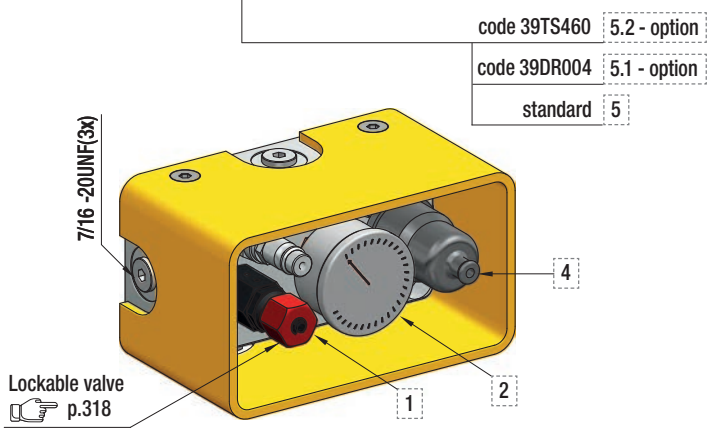

1	Valvola di scarico Discharging valve Auslaßventil Valve de déchargemen Válvula de desahogo Válvula de descarga	2	Manometro 0÷ 620 bar Pressure gauge 0÷ 620 bar Manometer 0÷ 620 bar Manomètre 0÷ 620 bar Manómetro 0÷ 620 bar Manómetro 0÷ 620 bar	3	Innesto rapido di caricamento Cejn Quick coupling for charging Cejn Steckkegel Cejn Accouplement rapide mãle Cejn Acoplamiento rápido para carga Cejn União rápida para carregamento Cejn	4	Pressostato 50÷300 bar Pressure switch 50÷300 bar Druckwächter 50÷300 bar Pressostat 50÷300 bar Presostato 50÷300 bar Pressostato 50÷300 bar
5	Tappo di chiusura M20 Closing plug M20 Verschlussstopfen M20 Bouchon de fermeture M20 Tapon de cierre M20 Plugue de fechamento M20	5.1	Tappo di rottura sovrappressione Over pressure rupture plug Überdruck Bruch Stecker Bouchon de rupture de surpression Enchufe de ruptura de sobrepresión Plugue ruptura sobrepressão	5.2	Tappo di sicurezza sovrapressione CE Overpressure safety plug CE Überdruck Sicherheitsstecker CE Bouchon de sécurité surpression CE Enchufe de seguridad sobrepresion CE Bujão de segurança sobrepressão CE		

code: 39TS460

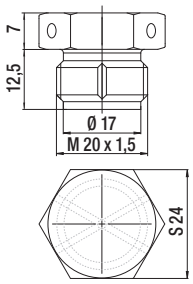

CONTROL PANEL CPVD
(Fiat standard)

code	Pressure Gauge	Rupture Plug	Easy Manifold
39CPVD	bar/psi	✗	✗
39CPVD + 39DR004	bar/psi	✓	✗
39CPVD + 39TS460	bar/psi	✓	✗

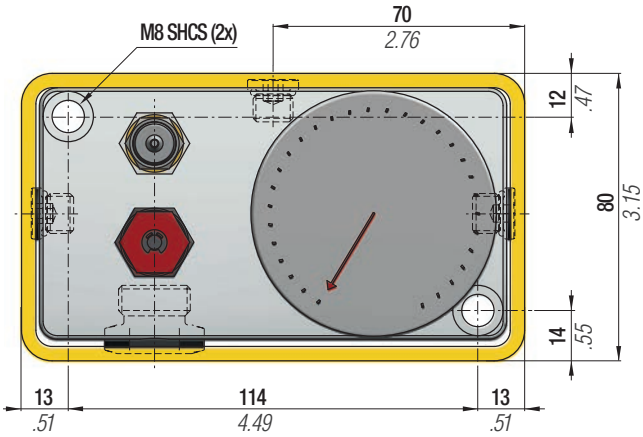

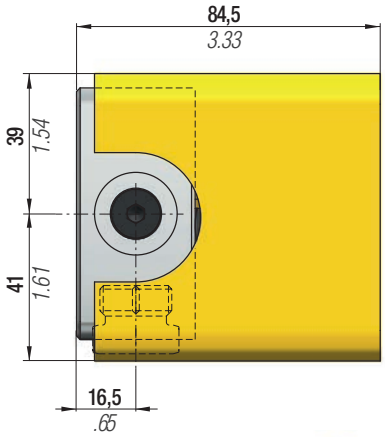

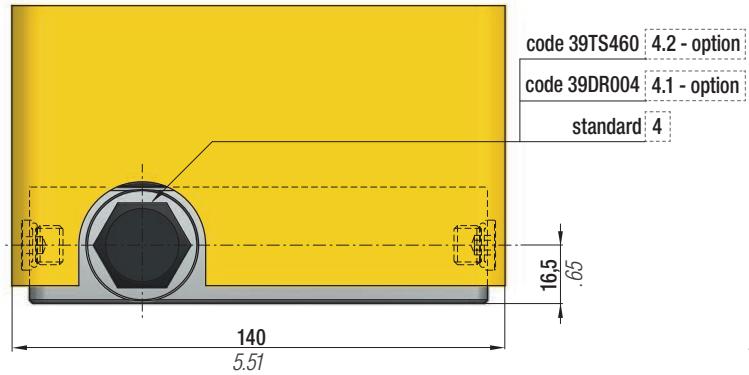

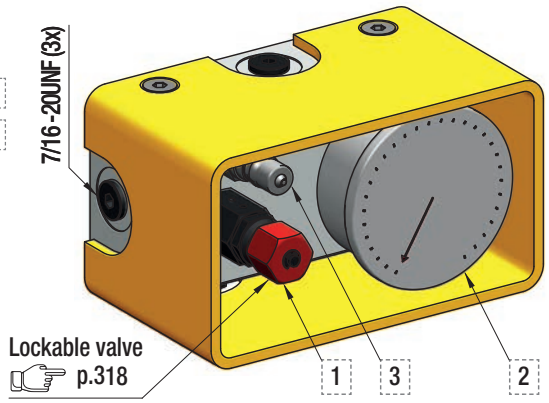

1	Valvola di scarico Discharging valve Auslaßventil Valve de déchargement Válvula de desahogo Válvula de descarga	2	Manometro 0÷ 620 bar Pressure gauge 0÷ 620 bar Manometer 0÷ 620 bar Manomètre 0÷ 620 bar Manómetro 0÷ 620 bar Manómetro 0÷ 620 bar	3	Innesto rapido per caricamento ISO7241-1 Series B Quick coupling for charging ISO7241-1 Series B Steckkegel ISO7241-1 Series B Accouplement rapide mâle ISO7241-1 Series B Acoplamiento rápido para carga ISO7241-1 Series B União rápida para carregamento ISO7241-1 Series B		
4	Tappo di chiusura M20 Closing plug M20 Verschlussstopfen M20 Bouchon de fermeture M20 Tapon de cierre M20 Plugue de fechamento M20	4.1	Tappo di rottura sovrappressione Over pressure rupture plug Überdruck Bruch Stecker Bouchon de rupture de surpression Enchufe de ruptura de sobrepresión Plugue ruptura sobrepressão	4.2	Tappo di sicurezza sovrapressione CE Overpressure safety plug CE Überdruck Sicherheitsstecker CE Bouchon de sécurité surpression CE Enchufe de seguridad sobrepresion CE Bujão de segurança sobrepressão CE		

code: 39TS460

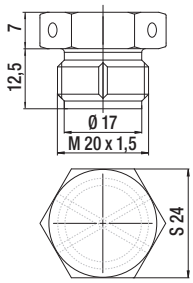

CONTROL PANEL CPVD (FIAT standard) - Hose connections

code RPT-D

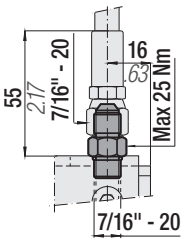

code RPT-R

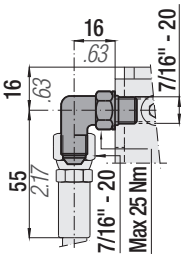

code RPT-M

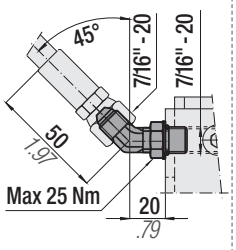

code RPT-T

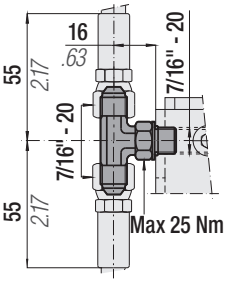

code RPT-L

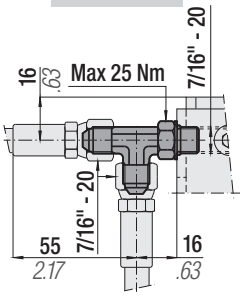

code RMPT

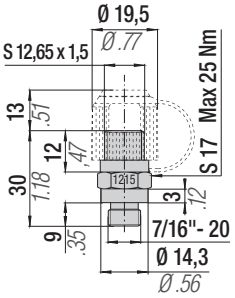

CONTROL PANEL CP15A
(Toyota standard)

IT
Pannello di controllo con base in alluminio, provvisto di manometro, valvola di caricamento e protezione in acciaio. 2 uscite da 1/8" gas per gestione sistemi collegati.

EN
Control panel with aluminum base. Equipped with pressure gauge, charging valve and steel protection. Two 1/8" gas outlets for managing hose system.

DE
Kontrollarmatur mit Aluminiumsockel. Ausgestattet mit Manometer, Auffüllventil und Stahlabdeckung. Zwei 1/8" Gas Anschlüsse zur Steuerung der Verbundsysteme.

FR
Panneau de contrôle avec base en aluminium. Equipé de manomètre, valve de chargement et protection en acier. Deux sorties 1/8" gaz pour la gestion des systèmes connectés.

ES
Panel de control con base de aluminio. Equipado con manómetro, válvula de carga y protección en acero. 2 salidas de 1/8" gas para gestión de sistemas conectados.

PT
Painel de controlo com base de aluminio. Equipado com manómetro, válvula de carga e sistema de protecção de aço. Duas saídas de gás 1/8" para ligação a mangueiras.

code	Pressure Gauge	Rupture Plug	Easy Manifold
39CP15A	bar/MPa	✗	✗

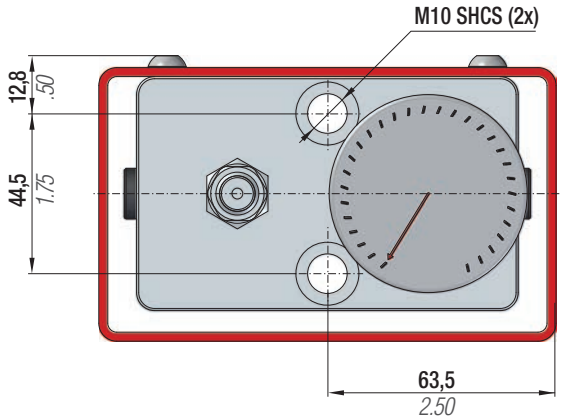

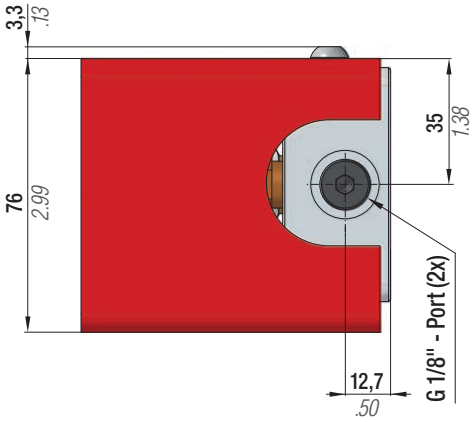

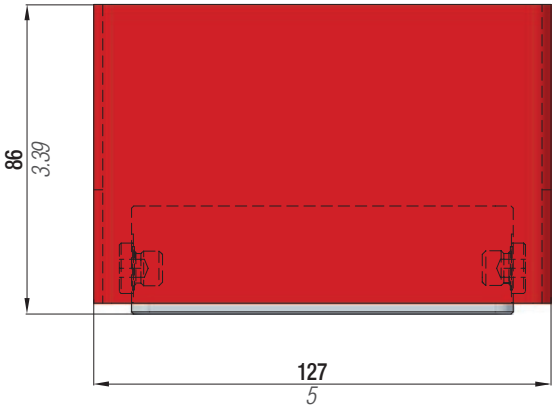

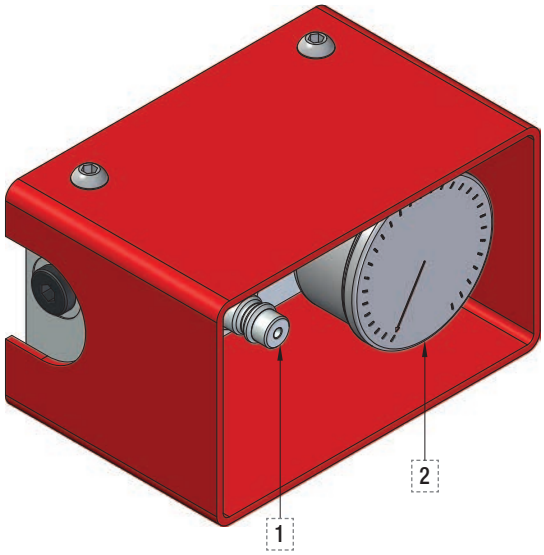

1	Innesto rapido di caricamento Cejn Quick coupling for charging Cejn Steckkegel Cejn Accouplement rapide mãle Cejn Acoplamiento rápido para carga Cejn União rápida para carregamento Cejn	2	Manometro 0÷ 620 bar Pressure gauge 0÷ 620 bar Manometer 0÷ 620 bar Manomètre 0÷ 620 bar Manómetro 0÷ 620 bar Manómetro 0÷ 620 bar

code 39VS03A

⚠ Use only for 39CP15A

IT	Dispositivo di scaricamento
EN	Discharging device
DE	Ablassvorrichtung
FR	Dispositif de déchargement
ES	Dispositivo de descarga
PT	Dispositivo de descarga

CONTROL PANEL CP16A

IT

Pannello di controllo con base in alluminio, provvisto di manometro, valvola di caricamento e scaricamento, tappo di rottura sovrappressione, protezione in acciaio, 3 uscite da 1/8" gas per gestione sistemi collegati.

EN

Control panel with aluminum base. Equipped with pressure gauge, charging and discharging valve, over pressure rupture plug, steel protection, three 1/8" gas outlets for managing hose system.

DE

Kontrollarmatur mit Aluminiumsockel. Ausgestattet mit Manometer, Auffüll- und Ablassventil, Überdruck Bruch Stecker, Stahlabdeckung, drei 1/8" Gas Anschlüsse zur Steuerung der Verbundsysteme.

FR

Panneau de contrôle avec base en aluminium. Equipé de manomètre, valve de chargement-déchargement, bouchon de rupture de surpression, protection en acier, trois sorties 1/8" gaz pour la gestion des systèmes connectés.

ES

Panel de control con base de aluminio. Equipado con manómetro, válvula de carga y descarga, enchufe de la ruptura de sobrepresión, protección en acero, 3 salidas de 1/8" gas para gestión de sistemas conectados.

PT

Painel de controlo com base de aluminio. Equipado com manómetro, válvula de carga e descarga, plugue ruptura sobrepressão, sistema de protecção de aço, três saídas de gás 1/8" para ligação a mangueiras.

code	Pressure Gauge	Rupture Plug	Easy Manifold
39CP16A	bar/psi	✓	✗

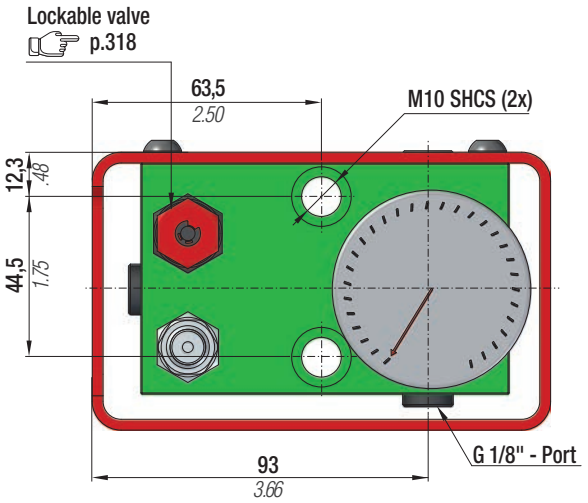

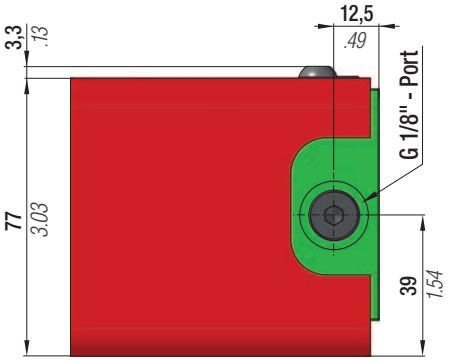

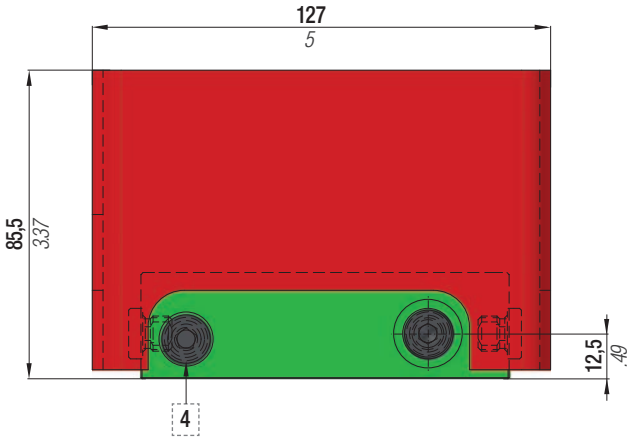

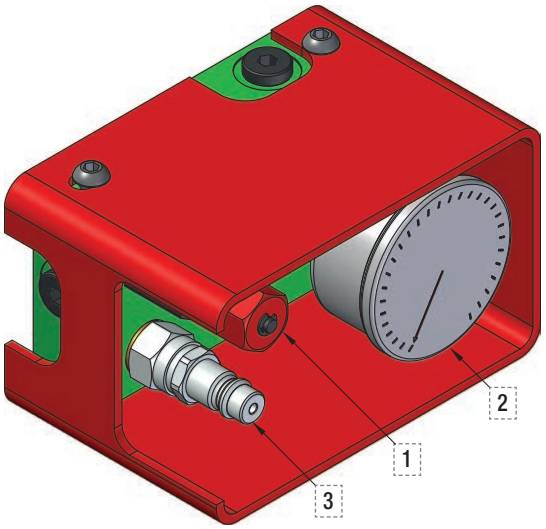

1	Valvola di scarico Discharging valve Auslaßventil Valve de déchargement Válvula de desahogo Válvula de descarga	2	Manometro 0÷ 620 bar Pressure gauge 0÷620 bar Manometer 0÷ 620 bar Manomètre 0÷ 620 bar Manómetro 0÷ 620 bar Manómetro 0÷ 620 bar	3	Innesto rapido di caricamento Cejn Quick coupling for charging Cejn Steckkegel Cejn Accouplement rapide mäle Cejn Acoplamiento rápido para carga Cejn União rápida para carregamento Cejn	4	Tappo di rottura sovrappressione Over pressure rupture plug Überdruck Bruch Stecker Bouchon de rupture de surpression Enchufe de la ruptura de sobrepresión Plugue ruptura sobrepressão

CONTROL PANEL CP17A
(Toyota standard)

IT

Pannello di controllo con base in alluminio provvisto di sensore di pressione con display digitale, innesto rapido di caricamento Cejn, tappo di rottura sovrappressione, 3 uscite da 1/8'' gas. Collegando il pannello al controllo pressa, è possibile impostare un range di lavoro desiderato al di fuori del quale il dispositivo invierà un segnale di allarme.

EN

Control panel with aluminium base, equipped with pressure sensor and digital display, Cejn-quick coupling for charging, overpressure rupture plug and three G 1/8'' ports. By connecting the control panel to the press control, it is possible to set a desired working range outside which the unit sends an alarm signal.

DE

Kontrollarmatur mit Aluminiumgehäuse mit Drucksensor und Digitalanzeige, Cejn-Schnellkupplung zur Befüllung, Überdruck-Berstsicherung und drei G1/8 Anschlussgewinden. Durch den Anschluss der Kontrollarmatur an die Pressensteuerung ist es möglich, einen gewünschten Arbeitsbereich einzustellen, außerhalb dessen das Gerät ein Alarmsignal sendet.

FR

Panneau de contrôle avec base en aluminium, équipé d'un capteur de pression et d'un affichage numérique, raccord rapide Cejn pour le chargement, bouchon de rupture pour surpression et trois ports G 1/8". En connectant le panneau de contrôle au système de contrôle de la presse, il est possible de définir une plage de fonctionnement souhaitée en dehors de laquelle l'unité envoie un signal d'alarme.

ES

Panel de control con base de aluminio equipado con sensor de presión con pantalla digital, conexión de carga rápida Cejn, tapón de rotura de sobrepresión, 3 salidas G1/8". Conectando el panel al control de la prensa, es posible establecer un rango de trabajo deseado fuera del cual el dispositivo enviará una señal de alarma.

PT

Painel de controle com base em aluminio, fornecido com sensor de pressão e display digital, engate rapido de carregamento CEJN, bujão de ruptura para sobre pressão, 3 saidas G1/8". Conectando o painel ao comando da prensa, é possivel determinar uma faixa de trabalho, que qualquer alteração desta faixa, o painel emitira um alarme.

code	Pressure Gauge	Rupture Plug	Easy Manifold	Pressure fitting position			
				Pos. A	Pos. B	Pos. C	Pos. A+C
39CP17A._	bar/MPa	✓	✗	.1	.2	.3	.4

(Toyota part number D-PACPS-B-...)

Ordering example:

code **39CP17A.1** Fitting position

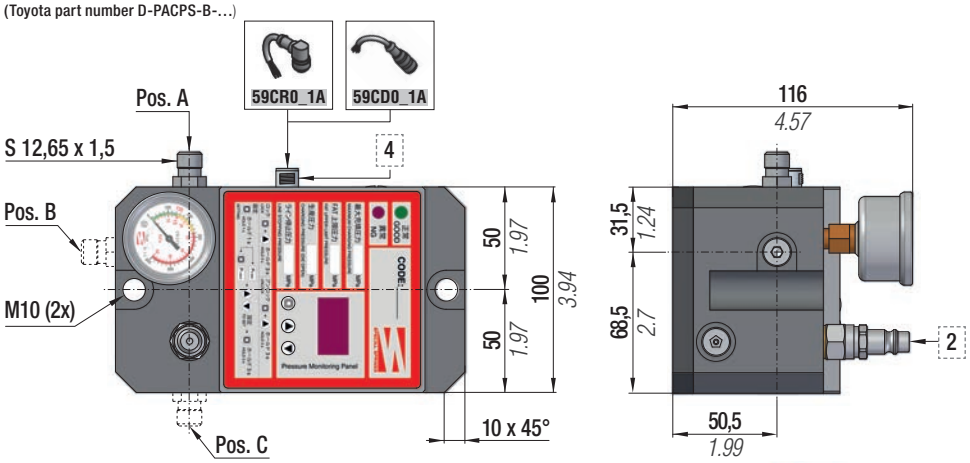

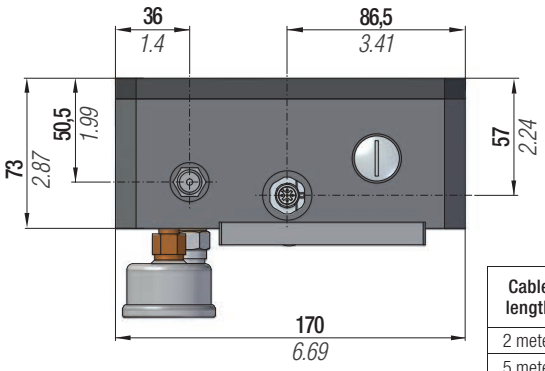

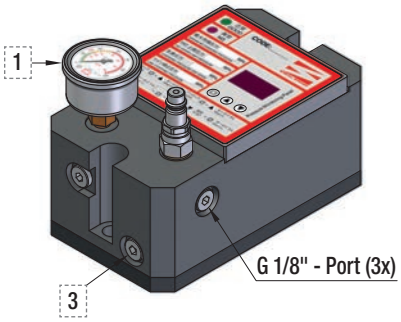

Cable length	90°	Straight
2 meter	59CR02A1	59CD02A1
5 meter	59CR03A1	59CD03A1
10 meter	59CR04A1	59CD04A1
Connector type M12x1 (5-pin) male – Reverse key (B-Code)		

Female: 4, 3, 5, 1, 2

Technical data		
Electrical connector type	M12x1 (5-pin) male Reverse key (B-Code)	
Pressure connection	S12,65x1,5	
Nominal pressure	0 - 350 bar	
Temperature range	- 20°C... + 60°C	
Degree of protection as per IEC 60529	IP65 when connected	
Supply voltage	12...24 V DC	100…120 V AC 50…60Hz
Max Output relay current (2-4 wire)	2A	1A
Max current	230mA	

Always depressurize and disconnect control panel from the power supply before establishing an electrical connection.

Electrical connections	12...24 V DC	100…120 V AC 50…60Hz	Wire connections color
1	+	1	Brown
3	-	3	Blue
2	Output relay - Normally Open		White
4			Black
5	Ground		Green / Yellow

Sensor circuit diagram

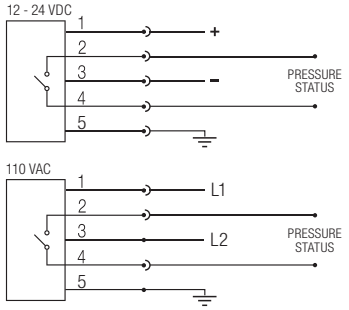

1	Manometro 0÷ 600 bar Pressure gauge 0÷ 600 bar Manometer 0÷ 600 bar Manomètre 0÷ 600 bar Manómetro 0÷ 600 bar Manómetro 0÷ 620 bar	2	Innesto rapido di caricamento Cejn Quick coupling for charging Cejn Steckkegel Cejn Accouplement rapide mãle Cejn Acoplamiento rápido para carga Cejn União rápida para carregamento Cejn	3	Tappo di rottura sovrappressione Over pressure rupture plug Überdruck Bruch Stecker Bouchon de rupture de surpression Enchufe de ruptura de sobrepresión Plugue ruptura sobrepressão	4	Connettore elettrico Electrical connector Elektrische Connecteur électrique Eléctrica Conector Conector elétrico

CONTROL PANEL CP23A

IT

Pannello di controllo con base in alluminio provvisto di sensore di pressione EYE, valvola di caricamento e scaricamento, tappo di rottura sovrappressione, protezione in acciaio, innesto rapido di caricamento Cejn e 3 uscite da 1/8'' gas per gestione sistemi collegati.

EN

Control panel with aluminium base, equipped with pressure sensor EYE, charging and discharging valve, overpressure rupture plug, steel protective cover, Cejn-quick coupling for charging and three G 1/8'' ports for managing linked systems.

DE

Kontrollarmatur mit Aluminiumgehäuse mit Drucksensor EYE, Befüll- und Ablassventil, Überdruck-Berstsicherung, Schutzabdeckung aus Stahl, Cejn-Schnellkupplung zur Befüllung, und drei G1/8 Anschlussgewinden zur Steuerung von Verbundsystemen.

FR

Panneau de contrôle avec base en aluminium, équipé du capteur de pression EYE, valve de chargement-déchargement, bouchon de rupture pour surpression, couverture de protection en acier, raccord rapide Cejn pour le chargement et trois ports G 1/8'' pour la gestion des systèmes connectés.

ES

Panel de control con base de aluminio equipado con sensor de presión EYE, válvula de carga y descarga, tapón de rotura de sobrepresión, protección de acero, acoplamiento rápido Cejn y 3 salidas G1/8" para gestión de sistemas conectados.

PT

Painel de controle com base em aluminio, fornecido com o sensor de pressão EYE, válvula de carregamento e descarregamento, bujão de rupture para sobre pressão, cobertura protetora em aço, engate rapido de carregamento CEJN e 3 saidas G1/8" para a gestão de sistemas de mangueiras.

code	Pressure Gauge	Rupture Plug	Easy Manifold p.241
39CP23A	bar/psi/MPa	✓	✓

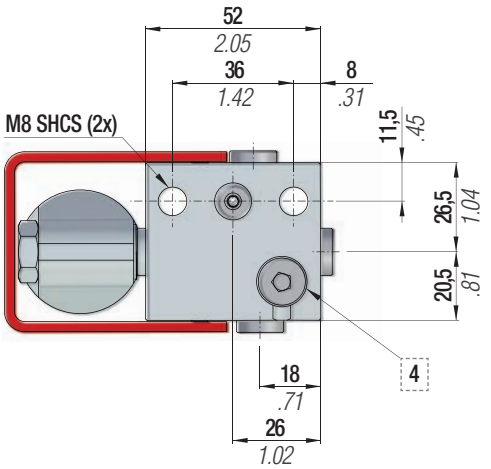

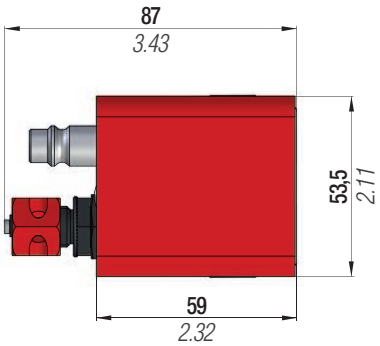

Easy Manifold mounting

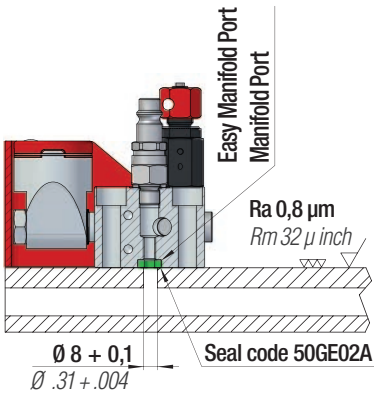

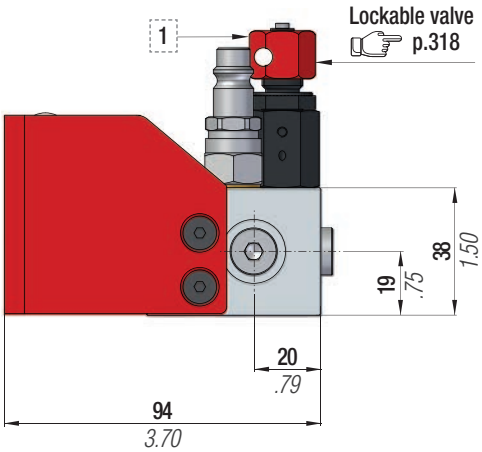

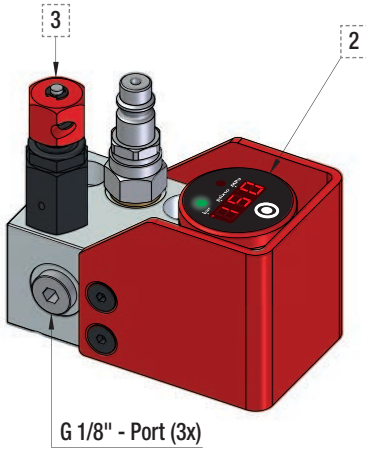

Technical data	
Measuring range	0 ÷ 600 bar / 8700 psi / 60 MPa
Visualization	3 digit display + 2 led
Resolution	1 bar, 10 psi, 1 MPa
Measurement unit	bar, psix10, MPa
Accuracy	±1,0% f.s., ±1 digit whichever is greater
Working temperature	0 ÷ 80°C / 176°F
Compatible fluids	Nitrogen
Battery	Maxell CR2032-3V, 220mAh
Material	Stainless steel/Aluminum alloy
Connection	G1/8"
Alarms	Low pressure (adjustable), High pressure (fixed), Sensor malfunction, Low battery
Battery lifetime	> 2000 readings
Degree of protection	IP65 when connected

1	Valvola di scarico Discharging valve Auslaßventil Valve de déchargement Válvula de desahogo Válvula de descarga	2	Sensore di pressione EYE EYE Pressure Sensor Drucksensor EYE Capteur de pression EYE Sensor de presión EYE Sensor de pressão EYE	3	Innesto rapido di caricamento Cejn Quick coupling for charging Cejn Steckkegel Cejn Accouplement rapide mãle Cejn Acoplamiento rápido para carga Cejn União rápida para carregamento Cejn	4	Tappo di rottura sovrappressione Over pressure rupture plug Überdruck Bruch Stecker Bouchon de rupture de surpression Enchufe de ruptura de sobrepresión Plugue ruptura sobrepressão

THIS PAGE IS INTENTIONALLY LEFT BLANK

DISTRIBUTION BLOCKS

code 39BD0301A

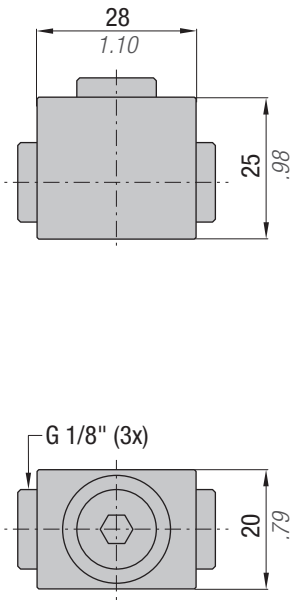

code 39BD0401A

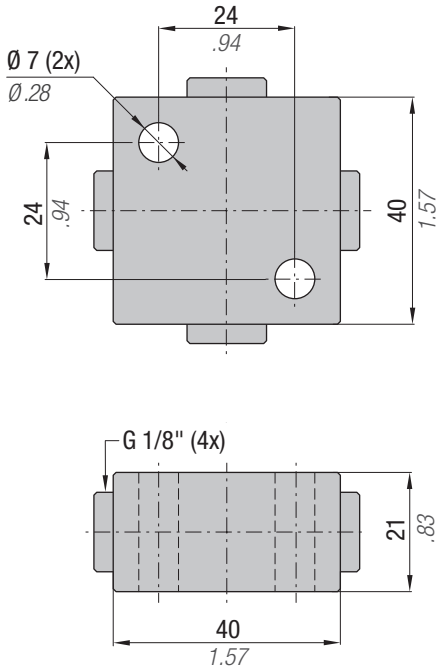

code 39BD0402A

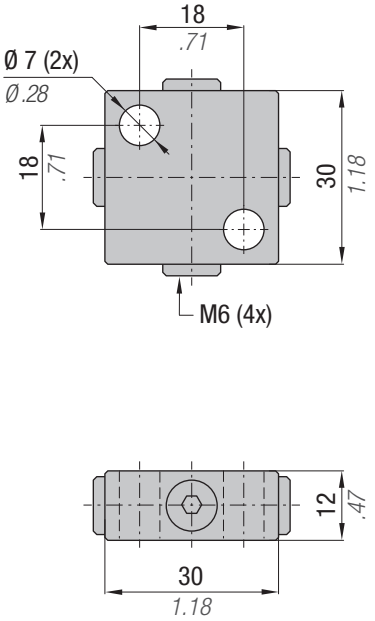

code 39BD06A

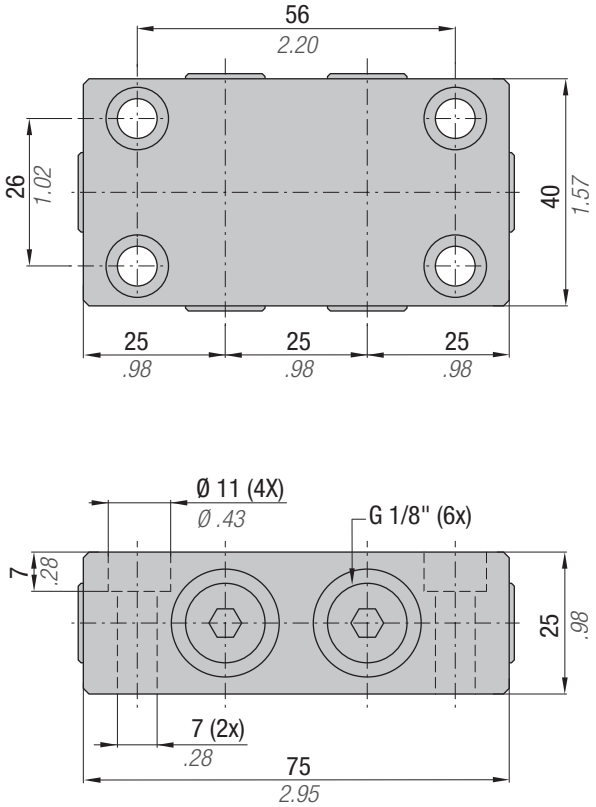

code 39BD0601A

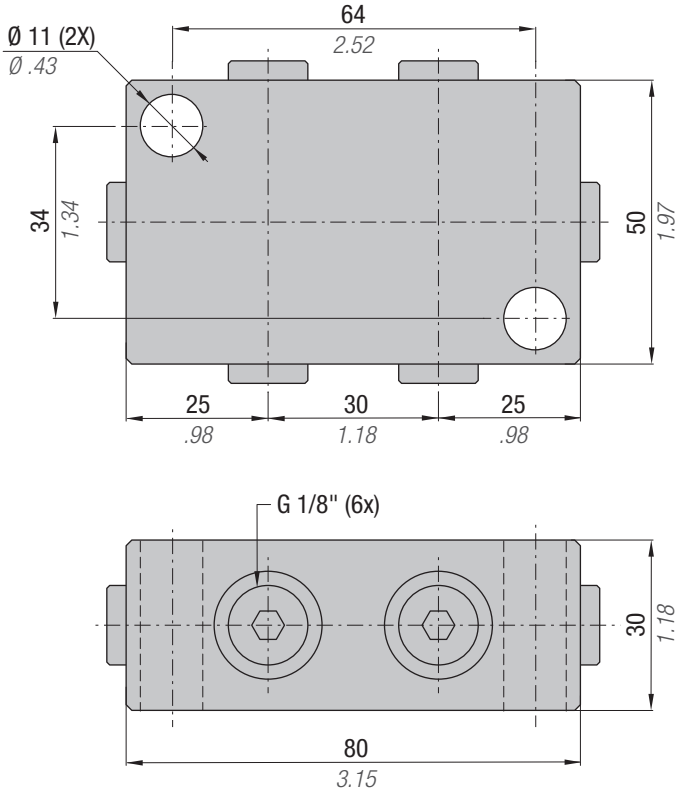

DISTRIBUTION BLOCKS

code 39BD06/1

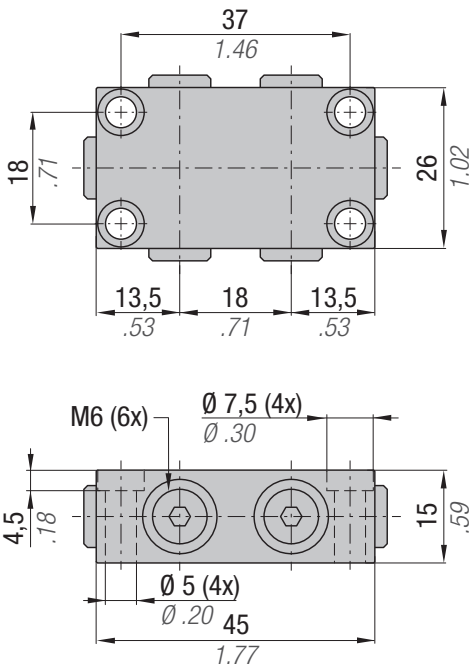

code 39BD06/2

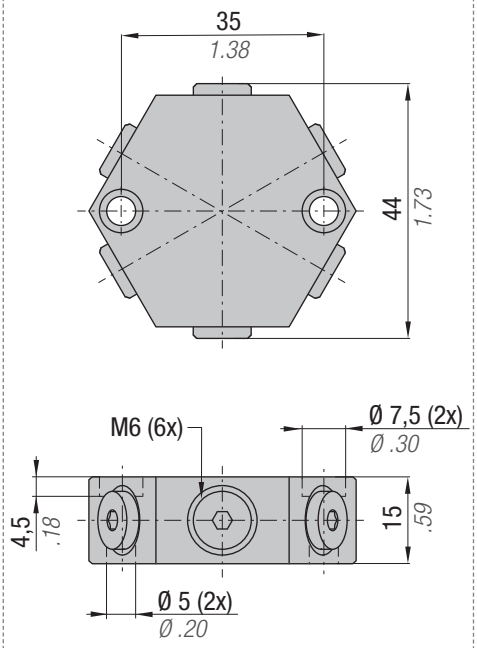

code 39BD0603A

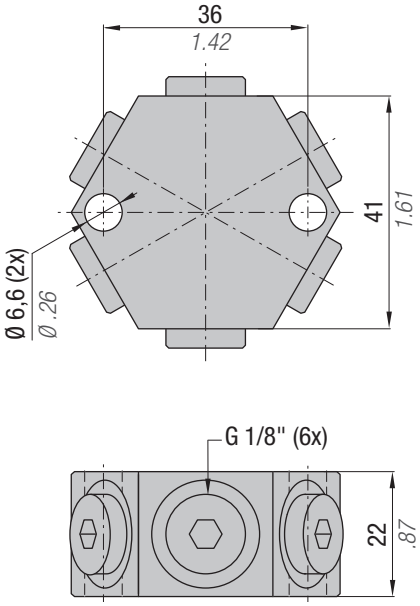

code 39BD0801A

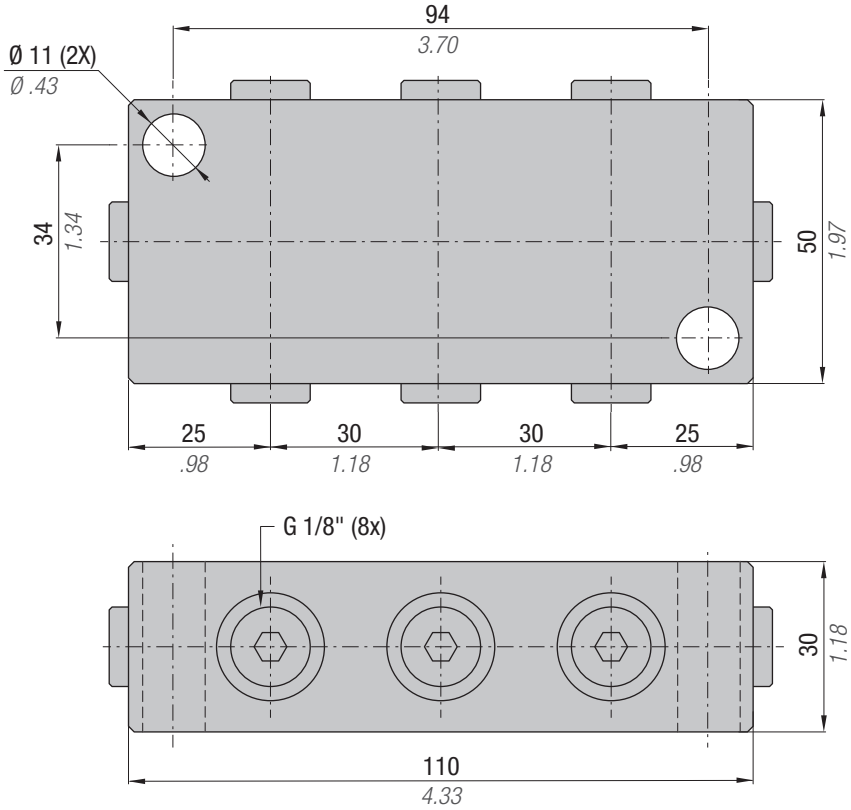

*All dimensions in **mm**/inch*

DISTRIBUTION BLOCKS

code 39BD10A

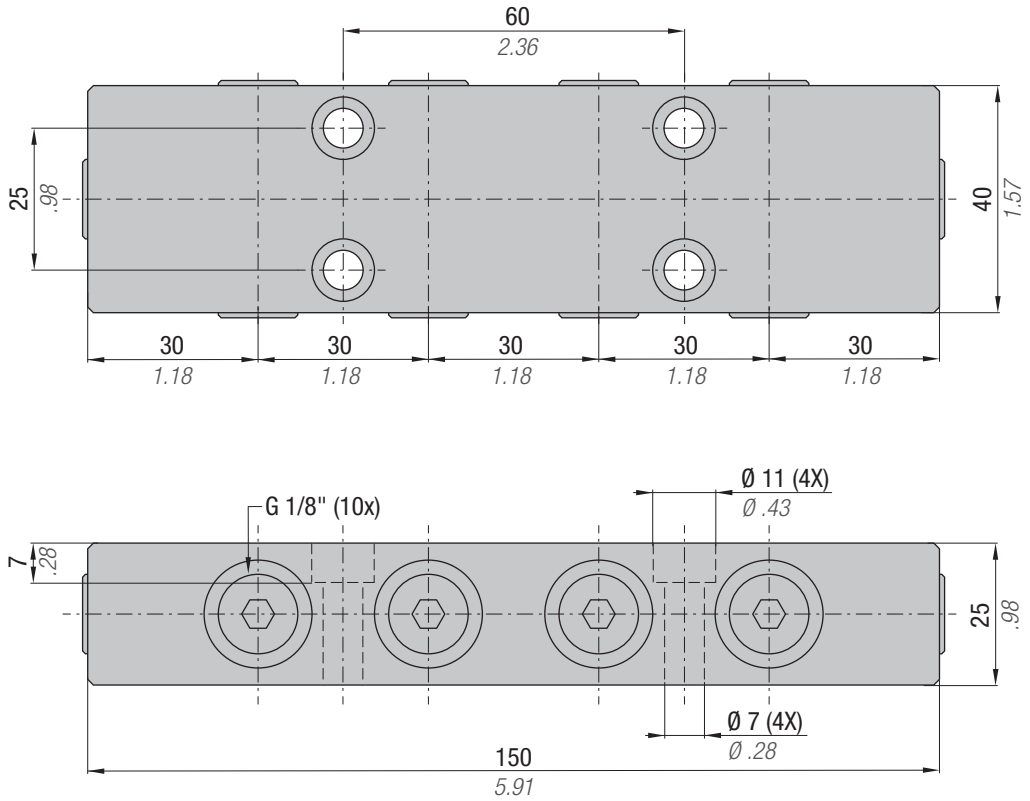

code 39BD1001A

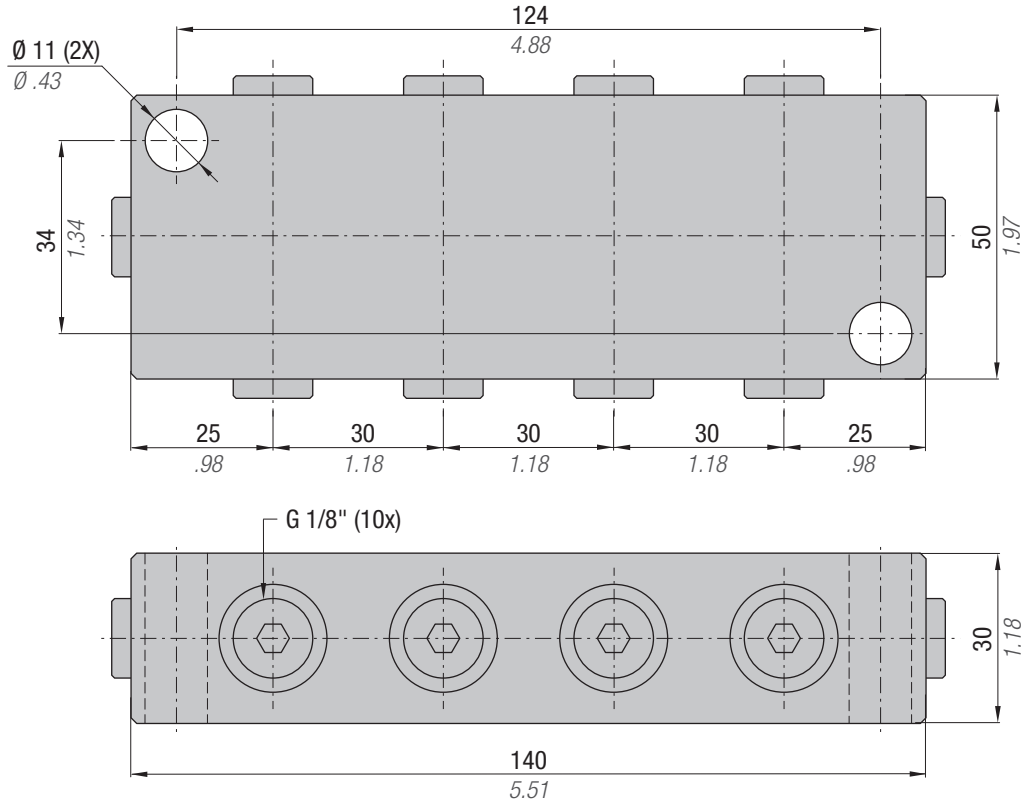

code 39BD1201A

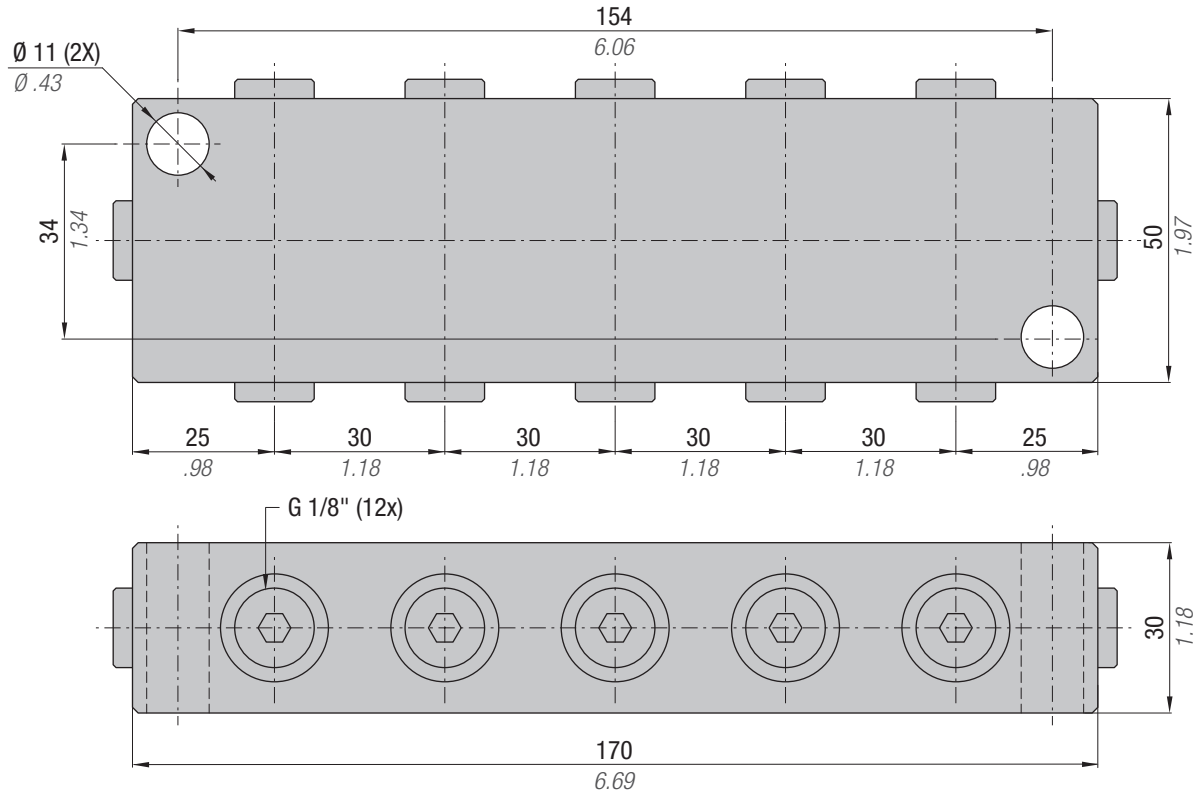

code 39BD1401A

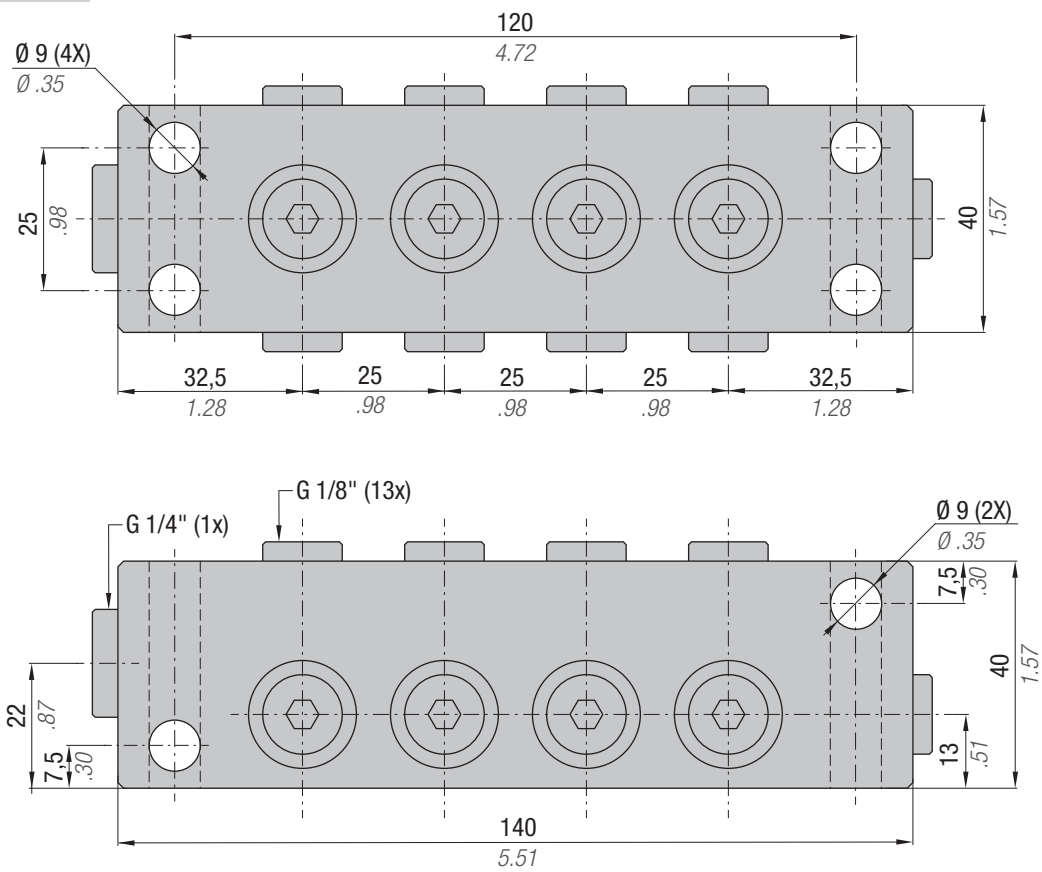

*All dimensions in **mm**/inch*

COMPENSATION TANKS

IT Nel modo di funzionamento non autonomo i cilindri possono essere collegati ad un polmone di compensazione esterno. Lo scopo principale é contenere l'aumento di pressione nel sistema entro limiti prefissati e minori rispetto al normale incremento dato dalla compressione degli steli-pistoni. La determinazione del volume di compensazione richiesto é facilmente calcolabile applicando la seguente formula:

Vp = n • {[S • x • R / (R-1)] - V0}

Vp = volume del polmone [cm3]
n = numero di cilindri componenti il sistema
S = sezione dello stelo (pistone per serie KE) di ogni singolo cilindro [cm2]
x = corsa effettiva di lavoro [cm]
R = rapporto tra pressione finale ed iniziale del sistema [max 1,4]
V_0 = volume iniziale di ogni singolo cilindro [cm^3]

Esempio:
Forza richiesta ~6000 daN ed R=1,1 (10%). Si scelgono n. 4 SC1500-50 (oppure n. 2 SC3000-50) Il volume richiesto é di circa 1300 cm^3 e quindi la scelta sara' per il polmone tipo PC-3. Un eventuale maggior volume del polmone non é un problema. Inoltre possono essere collegati tra loro piu' polmoni di compensazione per ottenere volumi piu' prossimi a quelli richiesti

EN Gas cylinders operating in non self-contained mode may be connected to a compensation tank. The principal aim is to limit the pressure within the system to a lower figure than would normally be obtained with standard compression rates. The compensation tank volume may be easily found using the following formula:

Vp = n • {[S • x • R / (R-1)] - V0}

Vp = compensation volume [cm3]
n = no. of gas cylinders required.
S = Area of rod (piston for series KE) in [cm2]
x = effective working stroke in [cm]
R = Ratio between final required pressure and initial pressure of the system [max 1,4]
V_0 = Initial volume of each cylinder in [cm^3]

Example:
Force required ~6000 daN and R = 1,1 (10%). No. of cylinders = 4 Type SC1500-50 (or 2 Type SC3000-50). The compensation volume required is approximately 1300 cm^3. Therefore, the compensation tank required will be type PC-3. Extra volume in the tank is generally not a problem, and to obtain more accurate volume, extra tanks may be connected in the system

DE Im gesteuerten Funktionsmodus können die Zylinder an einen Ausgleichspeicher angeschlossen werden. Hauptzweck ist es, den Druckaufbau im System innerhalb der vorgegebenen Grezwerte und unter der zulässigen Zunahme durch den Druck der Kolbenstangen zu halten. Die Bestimmung des notwendingen Ausgleichvolumens kann mit folgender Formel leicht errechnet werden:

Vp = n • {[S • x • R / (R-1)] - V0}

Vp = Speichervolumen [cm3]
n = Anzahl der Zylinder im System
S = Stangenquerschnitt (Kolben für Serie KE) jedes einzelnen Zylinders [cm2]
x = tatsächlicher Arbeitshub [cm]
R = Verhältinis zwischen Anfangsund Enddruck des Systems [max 1,4]
V_0 = Anfangsvolumen jedes einzelnen Zylinders [cm^3]

Beispiel:
Benötigte Kraft ca. 6000 daN, R = 1,1 (10%) Nr. 4 SC1500-50 (oder Nr. 2 SC3000-50) Das benötigte Volumen beträgt ca. 1300 cm^3, die Wahl des Speichers fällt daher auf den Typ PC-3. Auch ein eventuelles höheres Speicher volumen stellt kein Problem dar. Außerdem können mehrere Ausgleichspeicher aneinander geschlossen werden, um die benötigten Volumina zu erhalten

FR Dans le mode de fonctionnement non autonome, les vérins peuvent être reliés à un réservoir de compensation.
L'objectif principal est de contenir l'élévation de la pression, dans le système, dans les limites préétablies et inférieures par rapport à l'augmentation normale provoquée par la compression des tiges-pistons.
La détermination du volume de compensation requis se calcule facilement en utilisant la formule suivante:

Vp = n • {[S • x • R / (R-1)] - V0}

Vp = volume du réservoir [cm3]
n = nombre de vérins composant le système
S = section de la tige (piston pour série KE) de chaque vérin [cm2]
x = course réelle de travail [cm]
R = rapport entre pression finale et initiale du système [max 1,4]
V_0 = volume initial de chaque vérin [cm^3]

Exemple:
Force requise env. 6000 daN et R = 1,1 (10%) 4 SC1500-50 (ou bien 2 SC3000-50) Le volume requis est d'environ 1300 cm^3 et le choix se portera donc sur le réservoir de type PC-3. A noter qu'un plus grand volume éventuel du réservoir ne représente pas un problème. De plus, les réservoirs peuvent être couplés pour obtenir les volumes voisinant ceux requis.

*All dimensions in **mm**/inch*

COMPENSATION TANKS

ES Los cilindros de gas en funcionamiento no autónomo pueden conectarse a un pulmón de compensación. El objetivo principal es limitar la presión del sistema, reduciéndola a un valor menor que el que normalmente se obtendría con tasas de compresión standard. El volumen del pulmón de compensación puede calcularse fácilmente mediante la siguiente fórmula:

Vp = n • {[S • x • R / (R-1)] - V0}

Vp = volumen de compensación [cm3]
n = nº de cilindros de gas necesarios.
S = Área del vástago (pistón en la serie KE) en [cm2]
x = carrera efectiva en [cm]
R = Cociente entre la presión final necesaria y la presión inicial del sistema max 1,4]
V0 = Volumen inicial de cada cilindro en [cm3]

Ejemplo:
Fuerza necesaria ~6000 daN y R = 1,1 (10%).
Nº de cilindros = 4 Tipo SC1500-50 (ó 2 Tipo SC3000-50). El volumen de compensación necesario es de aproximadamente 1300 cm³. Por lo tanto, el pulmón de compensación será del tipo PC-3. Por lo general, un pulmón con volumen extra no constituye problema. Para obtener un volumen más exacto, puede ser necesario conectar más pulmones al sistema

PT Os cilindros de gás que operam em modo não autónomo podem ser ligados a um depósito de compensação. O principal objectivo é limitar o aumento de pressão dentro do sistema a um valor inferior ao que se obteria normalmente com taxas de compressão normalizadas. O volume do depósito de compensação pode ser facilmente determinado utilizando a fórmula seguinte:

Vp = n • {[S • x • R / (R-1)] - V0}

Vp = volume de compensação [cm³]
n = nº de cilindros de gás necessários.
S = Área do embolo (pistão para a série KE) em [cm2]
x = curso de trabalho efectivo em [cm]
R = Relação entre a pressão final requerida e a pressão inicial do sistema [max 1,4]
V0 = Volume inicial de cada cilindro em [cm3]

Exemplo:
Força requerida ~6000 daN e R = 1,1 (10%).
Nº de cilindros = 4 Tipo SC1500-50 (ou 2 Tipo SC3000-50). O volume de compensação requerido é de aproximadamente 1300 cm³. Logo, o depósito de compensação requerido é do tipo PC-3. O volume suplementar no depósito não é geralmente um problema e, para obter um volume mais preciso, podem ser ligados ao sistema depósitos suplementares

Codice Code Bestallnr. Code Codigo Còdigo	Ø D		L		A		H		HT		B		Faccia X X Side Seite X Face X Cara X Face X	Faccia Y Y Side Seite Y Face Y Cara Y Face Y	C		Raccordi Fittings Anschlüsse Raccords Racores Ligações	Volume Volume Volumen Volume Volumen Volume		PED 2014/68/EU
	mm	inch	mm	inch	mm	inch	mm	inch	mm	inch	mm	inch			mm	inch		cm³	in³	
39PC001A	100	3.94	290	11.42	90	3.54	58	2.28	140	5.51	125	4,.20	G1/8" (3x)	G1/8" (4x)	40	1.57		1000	61.02	✓
39PC003A	150	5.91	310	12.20	136	5.35	83	3.27	190	7.48	172	6.77	G1/8" (4x)	G1/8" (4x)	70	2.76	RTC	3000	183.07	✓
39PC005A	150	5.91	475	18.70	136	5.35	83	3.27	190	7.48	172	6.77	G1/8" (4x)	G1/8" (4x)	70	2.76	RMTC	5000	305.12	✓
39PC008A	200	7.87	415	16.34	212	8.35	108	4.25	242	9.53	252	9.92	G1/8" (6x)	G1/8" (6x)	97	3.82	RSMPTD	8000	488.18	✓
39PC010A	200	7.87	505	19.88	212	8.35	108	4.25	242	9.53	252	9.92	G1/8" (6x)	G1/8" (6x)	97	3.82		9960	607.79	✓

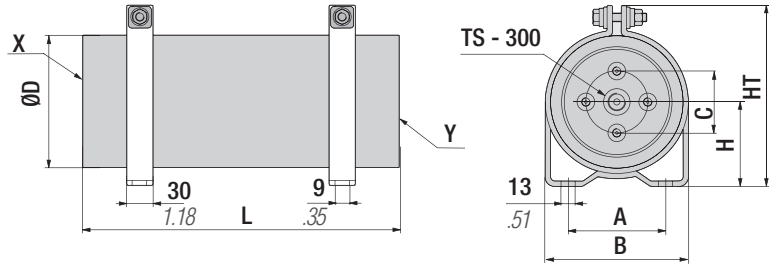

code: TS - 300 (300 bar)

Tappo di sicurezza sovrapressione CE
Overpressure safety plug CE
Überdruck Sicherheitsstecker CE
Bouchon de sécurité surpression CE
Enchufe de seguridad sobrepresion CE
Bujão de segurança sobrepressão CE

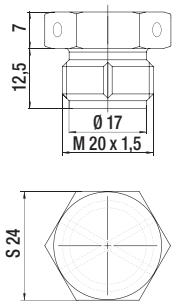

Esempio - Example - Beispiel - Exemple - Ejemplo - Exemplo:

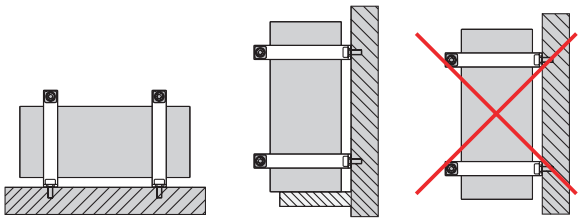

IT Pressione massima di caricamento: P= 150 bar
EN Maximum charging pressure: P= 150 bar
DE Max. Fülldruck: P= 150 bar
FR Pression maximale: P= 150 bar
ES Presión máxima de carga P = 150 bar
PT Pressão máxima de carregamento: P= 150 bar

*All dimensions in **mm**/inch*

AIR SYSTEMS TANKS

IT Le tabelle sotto riportate devono essere utilizzate, in fase di progettazione, per determinare il numero, il volume e le dimensioni dei serbatoi aria a bordo stampi. Tabella volumi (litri): volume d'aria necessario per cilindro pneumatico in relazione al diametro e alla corsa.

EN The tables below must be used, during design, to define the number, volume and sizes of the air tanks on the dies. Volume table (litres): volume of air needed for the pneumatic cylinder in relation to the diameter and stroke.

DE Die untenstehenden Tabellen werden in der Planungsphase für die Bestimmung der Anzahl, des Volumens und der Abmessung der Luftbehälteran Bord der Formen benutzt. Tabelle der Volumen (Liter): Das für Pneumatikzylinder in Bezug auf Durchmesser und Hub notwendige Luftvolumen

FR Les tableaux reportés ci-dessous doivent être utilisés, lors de la conception, pour déterminer le nombre, le volume et les dimensions des réservoirs d'air sur le bord des moules. Tableau des volumes (litres) : volume d'air nécessaire par cylindre pneumatique par rapport au diamètre et à la course.

ES Las tablas propuestas abajo deben ser utilizadas, en la fase de diseño, para determinar el número, el volumen y las dimensiones de los tanques de aire al borde de moldes. Tabla de volúmenes (litros): volumen de aire necesario para cilindro pneumático en relación al diámetro y a la carrera.

PT As tabelas abaixo devem ser usadas na fase de design de forma a detarminar o número, o volume e o tamanho do reservatório de ar da ferramenta.

Cilindro pneumatico Pnueumatic cylinder Pneumatikzylinder Vérin pneumatique Cilindro neumático Cilindro pneumático		Corse standard - Standard Strokes - Standardhübe - Course standard - Carreras estándar - Cursos standard mm / *inch*																	
		25	*0.98*	40	*1.57*	50	*1.97*	60	*2.36*	75	*2.95*	100	*3.94*	125	*4.92*	150	*5.91*	175	*6.89*
mm	*inch*	Volume - Volume - Volumens - Volume - Volumen - Volume dm^3 / *in^3*																	
Ø 32	*Ø 1.26*	0,020	*1.220*	0,032	*1.953*	0,040	*2.441*	0,048	*2.929*	0,060	*3.661*	0,080	*4.882*	0,100	*6.102*	0,120	*7.323*	0,140	*8.543*
Ø 40	*Ø 1.57*	0,031	*1.892*	0,050	*3.051*	0,063	*3.844*	0,075	*4.577*	0,094	*5.736*	0,126	*7.689*	0,157	*9.581*	0,189	*11.533*	0,221	*13.486*
Ø 50	*Ø 1.97*	0,049	*2.990*	0,078	*4.760*	0,098	*5.980*	0,118	*7.201*	0,147	*8.970*	0,196	*11.961*	0,245	*14.951*	0,294	*17.941*	0,343	*20.931*
Ø 63	*Ø 2.48*	0,078	*4.760*	0,125	*7.628*	0,158	*9.642*	0,187	*11.411*	0,234	*14.280*	0,312	*19.039*	0,390	*23.799*	0,488	*29.780*	0,546	*33.319*
Ø 80	*Ø 3.15*	0,126	*7.689*	0,201	*12.266*	0,251	*15.317*	0,302	*18.429*	0,377	*23.006*	0,503	*30.700*	0,528	*32.221*	0,754	*46.012*	0,880	*53.701*
Ø 100	*Ø 3.94*	0,196	*11.961*	0,314	*19.161*	0,393	*23.982*	0,471	*28.742*	0,589	*35.943*	0,785	*47.904*	0,982	*59.925*	1,177	*71.825*	1,374	*83.847*
Ø 125	*Ø 4.92*	0,308	*18.795*	0,491	*29.963*	0,614	*37.469*	0,738	*45.036*	0,920	*56.142*	1,227	*74.876*	1,534	*93.610*	1,841	*112.34*	2,147	*131.02*
Ø 160	*Ø 6.30*	0,502	*30.634*	0,804	*49.063*	1,005	*61.329*	1,208	*73.717*	1,508	*92.024*	2,010	*122.66*	2,513	*153.35*	3,016	*184.05*	3,519	*214.74*
Ø 200	*Ø 7.87*	0,785	*47.904*	1,257	*76.707*	1,571	*95.868*	1,885	*115.03*	2,356	*143.77*	3,142	*191.74*	3,928	*239.70*	4,712	*287.54*	5,498	*335.51*

IT Per cilindri pneumatici funzionanti a doppio effetto (d.e.) determinare il volume attraverso la tabella.
Per cilindri pneumatici funzionanti a semplice effetto (s.e.) determinare sempre il volume tramite la tabella e moltiplicare il risultato ottenuto per 3. Sommare tutti i volumi dei vari cilindri pneumatici a bordo stampo per ricavare la capacità totale (dm^3) del serbatoio. Scegliere il serbatoio in relazione alla capacità totale ricavata (dm^3) ed allo spazio disponibile sullo stampo.

EN For double acting pneumatic cylinders (d.e.) use the table to define the volume.
For single-acting pneumatic cylinders (s.e.) still use the table to define the volume and multiply the result obtained by 3.
Add all the volumes of the various pneumatic cylinders on the die to obtain the total capacity (dm^3) of the tank.
Choose the tank in relation to the total capacity obtained (dm^3) and to the space available on the die.

DE Für Pneumatikzylinder mit Doppeleffekt (d.e.) wird das Volumen auf Grund der Tabelle bestimmt.
Für Pneumatik Zylindern mit Einzeleffekt (s.e.), immer das Volume aufgrund der Tabelle bestimmen, dann der Ergebnis bei 3 multiplizieren. Aller Volumen der verschiedene Pneumatik Zylindern außer der Form summen, um das totale Fassungsvermögen des Tanks (dm3) zu ergeben. Der Tankbehälter in Verbindung mit der bestimmte Fassungsvermögen (dm3), und mit dem verfügbare Raum auf der Form, auszuwählen.

FR Pour les cylindres pneumatiques fonctionnant à double effet (d.e.), déterminer le volume au moyen du tableau. Pour les cylindres pneumatiques fonctionnant à effet simple (s.e.), déterminer toujours le volume au moyen du tableau et multiplier le résultat obtenu par 3. Sommer tous les volumes des différents cylindres pneumatiques sur le bord du moule pour obtenir la capacité totale (dm^3) du réservoir. Choix du réservoir par rapport à la capacité totale obtenue (dm^3) et à l'espace disponible sur le moule.

ES Para cilindros neumáticos funcionantes a doble efecto (d. e.) determinar el volumen por medio de la tabla. Para cilindros neumáticos funcionantes a simple efecto (s. e.) determinar siempre el volumen por medio de la tabla y multiplique el resultado obtenido por 3.Sumar todos los volúmenes de los varios cilindros pneumáticos en el borde de la prensa para calcular la capacidad total (dm^3) del depósito. Selección del tanque en relación a la capacidad total relevada (dm^3) y a el espacio disponible en la prensa.

PT Para cilindros pneumáticos de duplo efeito (d.e), o volume deve ser determinado de acordo com a tabela. Para cilindros pneumáticos de efeito único, o volume deve ser determinado de acordo com a mesma tabela. o resultado deve ser multipicado por3. Para saber a capacidade total (litros) do reservatório, deve somar todos os volumes dos cilindros pneumáticos A escolha da capacidade do reservatório, está relacionada com o cálculo da capacidade total (litros) e o espaço disponível na ferramenta.

*All dimensions in **mm**/inch*

AIR SYSTEMS TANKS

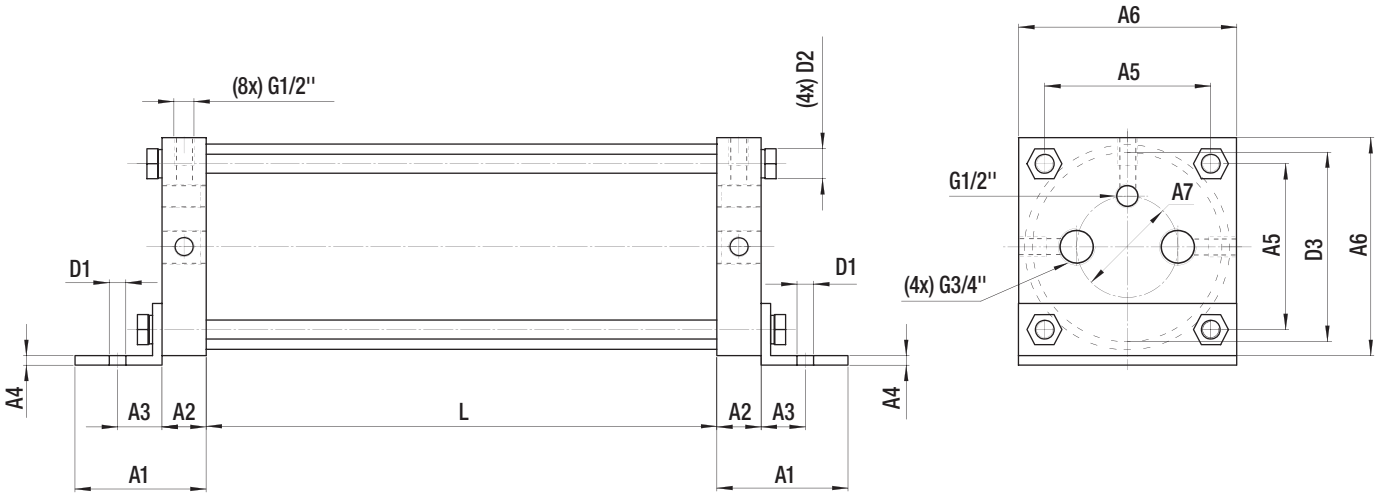

Codice Code Bestellnr. Code Codigo Còdigo	Volume Volume Volumen Volume Volumen Volume		A1		A2		A3		A4		A5		A6		A7		D1		D2	D3		L		Peso Weight Gewicht Poids Peso Peso		PED 2014/68/EU
	dm³	in³	mm	inch	mm	inch	mm	inch	mm	inch	mm	inch	mm	inch	mm	inch	mm	inch	mm	mm	inch	mm	inch	~Kg	~lb	
39SRA1003A	3	0,12	83	3,27	28	1,10	34	1,34	6	,24	105	4,13	138	5,43	65	2,56	10,5	,41	M12	120	4,72	271	10,67	14	30,9	✓
39SRA1004A	4	0,16	83	3,27	28	1,10	34	1,34	6	,24	105	4,13	138	5,43	65	2,56	10,5	,41	M12	120	4,72	360	14,17	15,7	34,6	✓
39SRA1005A	5	0,20	83	3,27	28	1,10	34	1,34	6	,24	105	4,13	138	5,43	65	2,56	10,5	,41	M12	120	4,72	449	17,68	17,4	38,4	✓
39SRA1006A	6	0,24	83	3,27	28	1,10	34	1,34	6	,24	105	4,13	138	5,43	65	2,56	10,5	,41	M12	120	4,72	538	21,18	19,1	42,1	✓
39SRA1008A	8	0,31	83	3,27	28	1,10	34	1,34	6	,24	105	4,13	138	5,43	65	2,56	10,5	,41	M12	120	4,72	716	28,19	22,5	49,6	✓
39SRA2003A	3	0,12	83	3,27	28	1,10	34	1,34	6	,24	127	5,00	168	6,61	80	3,15	12,5	,49	M12	150	5,91	175	6,89	17,2	37,9	✓
39SRA2004A	4	0,16	83	3,27	28	1,10	34	1,34	6	,24	127	5,00	168	6,61	80	3,15	12,5	,49	M12	150	5,91	232	9,13	18,4	40,6	✓
39SRA2005A	5	0,20	83	3,27	28	1,10	34	1,34	6	,24	127	5,00	168	6,61	80	3,15	12,5	,49	M12	150	5,91	289	11,38	19,7	43,4	✓
39SRA2006A	6	0,24	83	3,27	28	1,10	34	1,34	6	,24	127	5,00	168	6,61	80	3,15	12,5	,49	M12	150	5,91	346	13,62	21,0	46,3	✓
39SRA2008A	8	0,31	83	3,27	28	1,10	34	1,34	6	,24	127	5,00	168	6,61	80	3,15	12,5	,49	M12	150	5,91	460	18,11	23,6	52,0	✓
39SRA2010A	10	0,39	83	3,27	28	1,10	34	1,34	6	,24	127	5,00	168	6,61	80	3,15	12,5	,49	M12	150	5,91	574	22,60	26,2	57,8	✓
39SRA2012A	12	0,47	83	3,27	28	1,10	34	1,34	6	,24	127	5,00	168	6,61	80	3,15	12,5	,49	M12	150	5,91	688	27,09	28,7	63,3	✓
39SRA3004A	4	0,16	83	3,27	28	1,10	34	1,34	6	,24	163	6,42	218	8,58	120	4,72	12,5	,49	M16	200	7,87	132	5,20	26,3	58,0	✓
39SRA3005A	5	0,20	83	3,27	28	1,10	34	1,34	6	,24	163	6,42	218	8,58	120	4,72	12,5	,49	M16	200	7,87	164	6,46	27,3	60,2	✓
39SRA3006A	6	0,24	83	3,27	28	1,10	34	1,34	6	,24	163	6,42	218	8,58	120	4,72	12,5	,49	M16	200	7,87	196	7,72	28,3	62,4	✓
39SRA3008A	8	0,31	83	3,27	28	1,10	34	1,34	6	,24	163	6,42	218	8,58	120	4,72	12,5	,49	M16	200	7,87	260	10,24	30,3	66,8	✓
39SRA3010A	10	0,39	83	3,27	28	1,10	34	1,34	6	,24	163	6,42	218	8,58	120	4,72	12,5	,49	M16	200	7,87	324	12,76	32,4	71,4	✓
39SRA3012A	12	0,47	83	3,27	28	1,10	34	1,34	6	,24	163	6,42	218	8,58	120	4,72	12,5	,49	M16	200	7,87	388	15,28	34,4	75,8	✓
39SRA3015A	15	0,59	83	3,27	28	1,10	34	1,34	6	,24	163	6,42	218	8,58	120	4,72	12,5	,49	M16	200	7,87	484	19,06	37,4	82,5	✓
39SRA3018A	18	0,71	83	3,27	28	1,10	34	1,34	6	,24	163	6,42	218	8,58	120	4,72	12,5	,49	M16	200	7,87	580	22,83	40,4	89,0	✓
39SRA3022A	22	0,87	83	3,27	28	1,10	34	1,34	6	,24	163	6,42	218	8,58	120	4,72	12,5	,49	M16	200	7,87	708	27,87	44,4	97,9	✓

50°C	122°F	Temperatura max esercizio - Max. operating temperature - max. Betriebstemperatur Température maximum de fonctionnement - Temperatura máx. de ejercicio - Temepratura Max operacional.
15 bar	218 psi	P. max esercizio - Maximum operating pressure - max: Betriebsdruck Pression Max de Fonctionnement - Presión máx de ejercicio - Pressão máxima de operação.
25 bar	363 psi	Pressione di collaudo - Testing pressure - Druckprüfung Pression d'essais - Probar la presión - Pressão de teste.

*All dimensions in **mm**/inch*

ACCESSORIES

IT **Piastra di contrasto** Temperato
EN **Counter plate** Hardened
DE **Stellplatten** Gehärtet
FR **Plaques d'appui** Tempré
ES **Placas de soporte** Templado
PT **Placas de apoi** Temperado

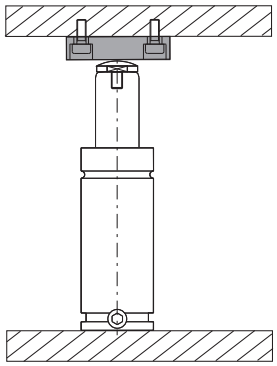

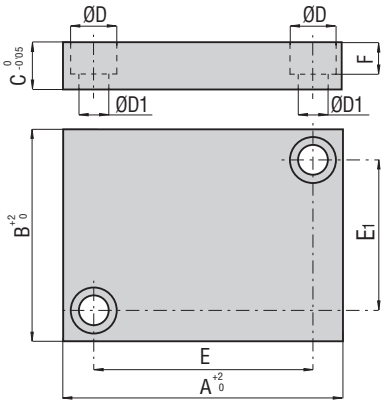

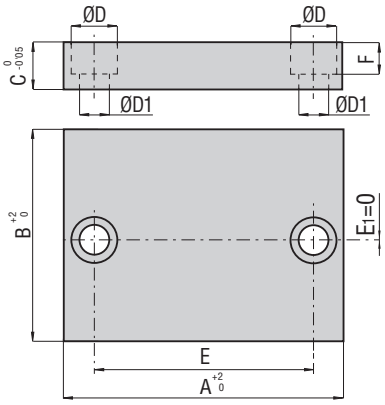

CODE		A		B		C		Ø D		Ø D1		E		E1		F		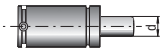	
PHASING OUT	NEW	mm	inch	mm	inch	mm	inch	mm	inch	mm	inch	mm	inch	mm	inch	mm	inch		
PS040040	39PA040040A [1) 5)]	40	1.57	40	1.57	15	0.59	15	0.59	9	0.35	21	0.83	21	0.83	10	0.39	d ≤ 20	0.79
-	39PAB040040A [4) 7)]	40	1.57	40	1.57	12	0.47	11	0.43	7	0.28	24	0.94	24	0.94	7	0.28	d ≤ 20	0.79
-	39PAA040040A	40	1.57	40	1.57	15	0.59	11	0.43	7	0.28	24	0.94	24	0.94	7	0.28	d ≤ 20	0.79
PS056056	39PA056056A [3) 5)]	56	2.20	56	2.20	20	0.79	18	0.71	11	0.43	32	1.26	32	1.26	13	0.51	d ≤ 36	1.42
-	39PA060060A [4) 7)]	60	2.36	60	2.36	15	0.59	15	0.59	9	0.35	40	1.57	40	1.57	9	0.35	d ≤ 36	1.42
-	39PAA060060A [6)]	60	2.36	60	2.36	12	0.47	14	0.55	9	0.35	38	1.5	38	1.5	9	0.35	d ≤ 36	1.42
-	39PA070070A [1)4)7)]	70	2.76	70	2.76	15	0.59	15	0.59	9	0.35	50	1.97	50	1.97	9	0.35	d ≤ 60	2.36
PS071071	39PA071071A [5)]	71	2.80	71	2.80	20	0.79	18	0.71	11	0.43	48	1.89	48	1.89	13	0.51	d ≤ 60	2.36
-	39PA080080A [2)]	80	3.15	80	3.15	16	0.63	15	0.59	9	0.35	62	2.44	0	0	10	0.39	d ≤ 65	2.56
-	39PAB090090A	90	3.54	90	3.54	12	0.47	15	0.59	9	0.35	64	2.52	64	2.52	9	0.35	d ≤ 80	3.15
-	39PAA090090A [1)]	90	3.54	90	3.54	15	0.59	15	0.59	9	0.35	70	2.76	70	2.76	9	0.35	d ≤ 80	3.15
-	39PA090090A [2)3)5)]	90	3.54	90	3.54	20	0.79	18	0.71	11	0.43	67	2.64	67	2.64	13	0.51	d ≤ 80	3.15
-	39PAC090090A [6)]	90	3.54	90	3.54	12	0.47	14	0.55	9	0.35	70	2.76	70	2.76	9	0.35	d ≤ 80	3.15
-	39PA100100A [2)]	100	3.94	100	3.94	16	0.63	15	0.59	9	0.35	82	3.23	0	0	10	0.39	d ≤ 90	3.54
-	39PAA100100A [4)7)]	100	3.94	100	3.94	20	0.79	18	0.71	11	0.43	74	2.91	74	2.91	11	0.43	d ≤ 90	3.54
-	39PAB100100A [6)]	100	3.94	100	3.94	12	0.47	14	0.55	9	0.35	81	3.19	81	3.19	9	0.35	d ≤ 90	3.54
-	39PAA140140A [4)]	140	5.51	140	5.51	20	0.79	18	0.71	11	0.43	110	4.33	110	4.33	11	0.43	d ≤ 130	5.12
-	39PA140140A [3) 5)]	140	5.51	140	5.51	20	0.79	18	0.71	11	0.43	110	4.33	110	4.33	13	0.51	d ≤ 130	5.12
PS050025	39PA050025A [1) 5)]	50	1.97	25	0.98	12	0.47	11	0.43	7	0.28	32	1.26	8	0.31	8	0.31	d ≤ 15	0.59
-	39PA050030A [5)]	50	1.97	30	1.18	12	0.47	11	0.43	7	0.28	40	1.57	14	0.55	8	0.31	d ≤ 20	0.79
PS055030	39PA055030A [1)]	55	2.17	30	1.18	12	0.47	11	0.43	7	0.28	40	1.57	14	0.55	8	0.31	d ≤ 20	0.79
-	39PA055032A [2)]	55	2.17	32	1.26	16	0.63	15	0.59	9	0.35	37	1.46	0	0	10	0.39	d ≤ 20	0.79
-	39PA065050A [2)]	65	2.56	50	1.97	16	0.63	15	0.59	9	0.35	47	1.85	0	0	10	0.39	d ≤ 36	1.42
PS070035	39PA070035A [1) 5)]	70	2.76	35	1.38	15	0.59	15	0.59	9	0.35	48	1.89	14	0.55	10	0.39	d ≤ 30	1.18
PS075050	39PA075050A [1) 5)]	75	2.95	50	1.97	15	0.59	15	0.59	9	0.35	56	2.2	30	1.18	10	0.39	d ≤ 36	1.42
-	39PA080060A [2)]	80	3.15	60	2.36	16	0.63	15	0.59	9	0.35	62	2.44	0	0	10	0.39	d ≤ 55	2.17
-	39PAA085060A [5)]	85	3.35	60	2.36	15	0.59	15	0.59	9	0.35	56	2.2	40	1.57	10	0.39	d ≤ 55	2.17
PS085060	39PA085060A [1)]	85	3.35	60	2.36	15	0.59	15	0.59	9	0.35	66	2.6	40	1.57	10	0.39	d ≤ 55	2.17
PS100080	39PA100080A [1) 5)]	100	3.94	80	3.15	20	0.79	18	0.71	11	0.43	72	2.83	56	2.2	12	0.47	d ≤ 70	2.76
PS110100	39PA110100A [5)]	110	4.33	100	3.94	20	0.79	18	0.71	11	0.43	85	3.35	75	2.95	12	0.47	d ≤ 100	3.94

[1)] VDI 3003 [2)] Volvo [3)] Renault [4)] Volkswagen [5)] FCA [6)] Mercedes Benz [7)] BMW

*All dimensions in **mm**/inch*

IT	**Piastra di contrasto**	Temperato
EN	**Counter plate**	Hardened
DE	**Stellplatten**	Gehärtet
FR	**Plaques d'appui**	Tempré
ES	**Placas de soporte**	Templado
PT	**Placas de apoi**	Temperado

CODE	R		B		C		D		Ø E		Ø F		
	mm	inch	mm	inch	mm	inch	mm	inch	mm	inch	mm	inch	mm / inch
⚠ 39PA050A 8)	25	0.98	21	0.83	15	0.59	10	0.39	9	0.35	15	0.59	d ≤ 15 / 0.59
⚠ 39PA070A 8)	35	1.38	32	1.26	20	0.79	13	0.51	11	0.43	18	0.71	d ≤ 25 / 0.98
⚠ 39PA094A 8)	47	1.85	48	1.89	20	0.79	13	0.51	11	0.43	18	0.71	d ≤ 50 / 1.97

8) Fiat

⚠ Phasing out

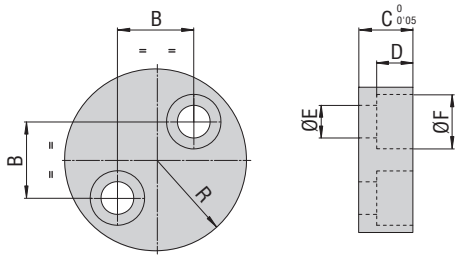

CODE	R		B1		C		D		Ø E		Ø F		
	mm	inch	mm	inch	mm	inch	mm	inch	mm	inch	mm	inch	mm / inch
39PA050B 5)	25	0.98	21	0.83	15	0.59	10	0.39	9	0.35	15	0.59	d ≤ 15 / 0.59
39PA070B 5)	35	1.38	32	1.26	20	0.79	13	0.51	11	0.43	18	0.71	d ≤ 25 / 0.98
39PA094B 5)	47	1.85	48	1.89	20	0.79	13	0.51	11	0.43	18	0.71	d ≤ 50 / 1.97

5) FCA

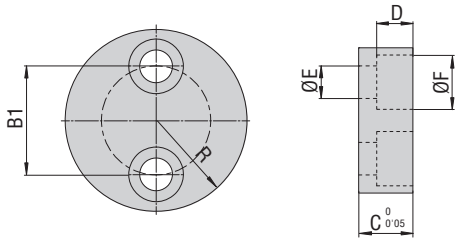

CODE	A		B		Ø C		Ø D		Ø E		Ø F		
	mm	inch	mm	inch	mm	inch	mm	inch	mm	inch	mm	inch	mm / inch
39PA098A 4)	12	0.47	20	0.79	98	3.86	73	2.87	20	0.79	13,5	0.53	d ≤ 50 / 1.97
39PA113A 4)	12	0.47	20	0.79	113	4.45	88	3.46	20	0.79	13,5	0.53	d ≤ 65 / 2.58
39PA128A 4)	12	0.47	20	0.79	128	5.04	103	4.06	20	0.79	13,5	0.53	d ≤ 80 / 3.15
39PA143A 4)	12	0.47	20	0.79	143	5.63	118	4.65	20	0.79	13,5	0.53	d ≤ 95 / 3.74

4) Volkswagen

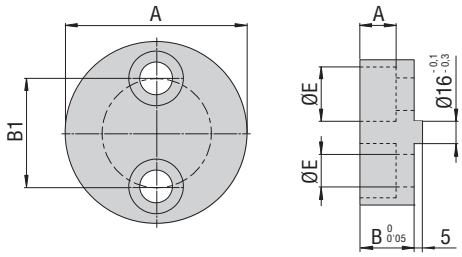

code FA 022

IT	**Calotta**	Temperato	
EN	**Thrust plates**	Hardened	
DE	**Schaftkappe**	Gehärtet	**49 - 52 HRC**
FR	**Calotte pour tiges**	Tempré	
ES	**Casquillo para vástagos**	Templado	
PT	**Calote para embolo**	Temperado	

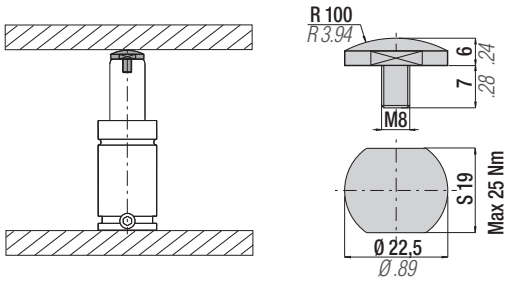

PRESSURE SWITCH

IT	**Pressostato**	Tensione di lavoro 48 V max	Normalmente aperto
EN	**Pressure switch**	Operating voltage 48 V max	Normally opened
DE	**Druckwächter**	Arbeitsspannung 48 V max	Normalerweise offen
FR	**Pressostat**	Tension d'utilisation 48 V max	Normalement ouvert
ES	**Presostato**	Tensión de trabajo 48 V max	Normalmente abierto
PT	**Pressostato**	Tensão de Trabalho 48 V max	Normalmente aberto

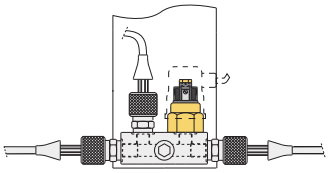

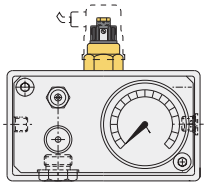

CODE	A	Range
PMM150A	1/8 " BSPT	50:150 bar
PMM300A	1/8 " BSPT	50:300 bar
PMM150A01	1/4 " BSPT	50:150 bar
PMM300A01	1/4 " BSPT	50:300 bar

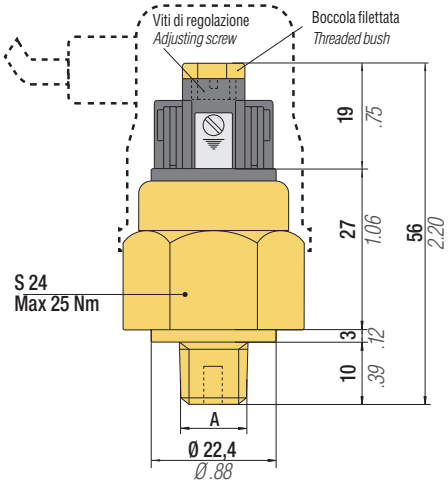

*All dimensions in **mm**/inch*

ACCESSORIES

code 39DMA

IT Dispositivo completo per le operazioni di controllo, riduzione/aumento della pressione o caricamento di cilindri autonomi e sistemi collegati.

EN Complete device designed and built for checking operations, decreasing/increasing pressure, or charging self-contained cylinders and linked systems.

DE Komplette Vorrichtung zur Kontrolle Operationen, Verminderung / Erhöhung des Drucks, oder Ladung die Selbstständigen gasdruckfedern und verbundenen Systemen.

FR Dispositif complet pour les opérations de contrôle, réduction/augmentation de la pression ou chargement de cylindres autonomes et systèmes reliés.

ES Dispositivo completo para las operaciones de control, reducción/aumento de la presión o carga de cilindros autónomos y sistemas conectados.

PT Dispositivo completo para as operações de controle, redução/aumento da pressão ou carregamento dos cilindros autônomos e sistemas conectados.

Box content:	
1	39DMCILA (1 pcs)
2	39DMCPVA (1 pcs) included 39IR01A (1 pcs)
3	ADM01 (1 pcs) - ADM002 (1 pcs) - ADM003 (1 pcs) - ADM004 (1 pcs) - ADM005 (1 pcs) - ADM006 (1 pcs) - ADM008 (1 pcs)
-	Declaration of CE conformity - User manual

Installation Example

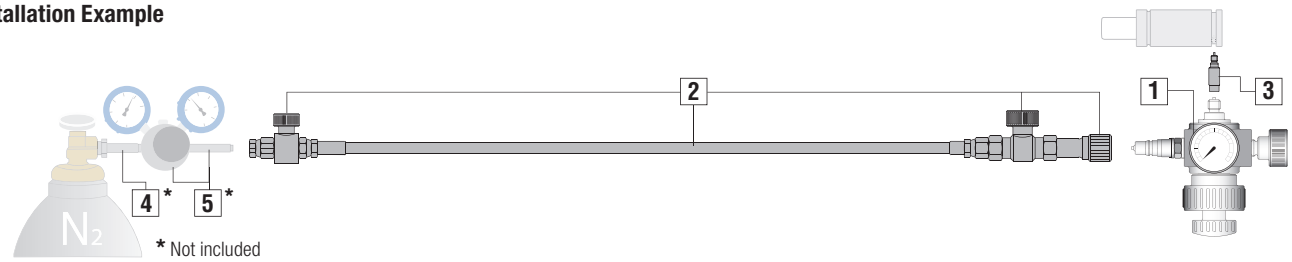

4*	Attacco per bombola - Connection for bottle - Ansatz für die Flasche - Décapage pour bombonne - Ataque a la Bombona - Ataque a Bottle p.322
5*	Riduttore di pressione - Pressure reducer - Druckminderer - Réducteur de pression - Reductor de presión - Redutor de pressão p.323

code 39DMCILA

IT Manometro 0 ÷ 315 bar - 2 manopole - valvola di riduzione/scarico pressione - adattatore fisso G1/8"- attacco rapido maschio Cejn.

EN 0 ÷ 315 bar gauge - 2 hand knobs– pressure limitation/discharging valve - G1/8" built in adapter - quickfit male Cejn.

DE Manometer 0 ÷ 315 bar - 2 Drehknopfs - Entlüftungsventil - fester Adapter G1/8" - Schnellverschlusskupplung Stecker Cejn.

FR Manomètre 0 ÷ 315 bar - 2 poignées - soupape de réduction/déchargement pression - Adaptateur fixe G1/8" - enclenchement instantané mâle Cejn.

ES Manómetro 0 ÷ 315 bar - 2 perillas - válvula de reducción/descarga de presión - adaptador fijo G1/8"- enganche rápido macho Cejn.

PT Manômetro 0 ÷ 315 bar/psi - 2 manoplas - válvula de redução/descarga pressão - adaptador fixo G1/8"- engate rápido macho Cejn.

code 39DMCPVA

IT 3 mt di tubo - attacco rapido femmina Cejn - valvola ON/OFF - valvola di scarico tubo - 1 innesto rapido supplementare (cod. 39IR01A - SOLO PER CPVB - CPVD).

EN 3 Mt high pressure hose- quickfit female Cejn- shut-off valve- hose release valve –additional quick coupling (cod. 39IR01A - ONLY FOR CPVB - CPVD).

DE 3 Meter Schlauch- Schnellverschlusskupplung Muffe Cejn- Sperrventil- Rohr Ablassventil- 1 zusätzliche Schnellverschluss Kupplung (im. 39IR01A - NUR FÜR CPVB-CPVD KONTROLLARMATUR).

FR 3 m de tuyau – enclenchement instantané femelle Cejn – soupape ON/OFF – soupape de déchargement tuyau - 1 enclenchement instantané supplémentaire (cod. 39IR01A - UNIQUEMENT POUR CPVB - CPVD).

ES 3 mt de tubo - enganche rápido hembra Cejn - válvula ON/OFF - válvula de descarga tubo - 1 inserción rápida suplementaria (cod. 39IR01A - SÓLO PARA CPVB - CPVD).

PT 3 mt de tubo – engate rápido fêmea Cejn - válvula ON/OFF - válvula de descarga tubo - 1 engate rápido suplementar (cod. 39IR01A - SOMENTE PARA CPVB - CPVD).

code 39IR01A

ISO 72 - C - 2 - 2 - RP

IT Innesto rapido femmina per dispositivo 39DMCPVA (USARE SOLO CON PANNELLI CPVB - CPVD).

EN Quickfit female coupling for device 39DMCPVA (SUITABLE ONLY FOR CPVB - CPVD PANELS).

DE Schnellverschlusskupplung Muffe für Ausstattung 39DMCPVA (NUR FÜR CPVB - CPVD KONTROLLARMATUR).

FR Enclenchement instantané femelle pour dispositif 39DMCPVA (N'UTILISER QU'AVEC PANNEAUX CPVB - CPVD).

ES Inserción rápida hembra para dispositivo 39DMCPVA (USO SOLAMENTE CON PANELES CPVB - CPVD).

PT Engate rápido fêmea para dispositivo 39DMCPVA (USE UNICAMENTE COM PAINÉIS CPVB - CPVD).

code 39IRFA

⚠ Only for 39DMCPV

Cejn 358

IT Innesto rapido femmina per dispositivo 39DMCPV (NON USARE CON PANNELLI CPVB - CPVD).

EN Quickfit female coupling for device 39DMCPV (NOT SUITABLE FOR CPVB - CPVD PANELS).

DE Schnellverschlusskupplung Muffe für Ausstattung 39DMCPV (NICHT MIT CPVB - CPVD ARMATUR VERWENDEN).

FR Enclenchement instantané femelle pour dispositif 39DMCPV (NE PAS UTILISER AVEC PANNEAUX CPVB - CPVD).

ES Inserción rápida hembra para dispositivo 39DMCPV (NO USAR CON PANELES CPVB - CPVD).

PT Engate rápido fêmea para dispositivo 39DMCPV (NÃO USE COM PAINÉIS CPVB - CPVD).

code 39QDFV01 for 1/8G thread
code 39QDFV02 for M6 thread
code 39QDFV03 for M6 thread

IT Adattatore per caricamento diretto con innesto rapido maschio Cejn.

EN Cejin male quick fit adapter for direct charging.

DE Adapter für direkt Ladung mit Schnellverschlusskupplung Stecker Cejn.

FR Adaptateur direct pour le chargement avec enclenchement instantané mâle Cejn.

ES Adaptador directo para la carga con enganche râpido macho Cejn.

PT Adaptador direto para la carga con engate râpido macho Cejn.

⚠ ☞ **tab below.**

Code	39QDFV01	39QDFV03	39QDFV02	39QDFV03	39QDFV02	39QDFV02	39QDFV02	39QDFV03	39QDFV01
Modello Model Modell Model Modelo Modelo	ML1800 - 12000 (rev A)	HR300 Cu 5 - 16 HR500 Cu 5 - 16 HR700 Cu 10 - 16 HRF700 Cu 10 - 16 ML500 ML1000 LI400 Cu 13	NE16, NE24 (rev A) HR1000 - 4200 HRF1000 LI900 - 2000	SC150, SC250 SCF250, H300 H500, HF500 HR500 Cu 25 - 125 HR700 Cu 19 - 125 HRF500 Cu 25 - 125 HRF700 Cu 19 - 125 LI400 Cu 25 - 100	K40 ML300	HR200 MCS19 MCS19 - TBM MCS19 - TBI MCS19 - TEM MCS25	NE16 - NE24 (revB) NG16 - NG24 M50 - M70 M90 - MS90 M90 TBM - TBI - TEM M200 - MS200 M300 KE400 - 7500 RV170 - 2400 RS170 - 2400 SC150 - 250 (rev D) H 300 - 500 (rev C) ML300 (rev B+C) MP150	ML500-1000 (rev B+C) MP300 - 3000 MQ700	SC500 - 10000, SCF500 - 750 H700 - 18500 HF700 - 1000 HR6600 - 11800 LI3200 LS1500 - 9500 KE12000 - 18500 S500 - S3000 RV4200 - RV20000 RS4200 - RS9500 RF750 - RF2400 RG750 - RG6600 RT350 - RT9500 ML1800 - ML12000 (rev B+C)
A	G1/8”	M6	M6	M6	M6	M6	M6	M6	G 1/8”
Code	**ADM01**	**ADM02**	**ADM03**	**ADM04**	**ADM05**	**ADM06**	**ADM08**	**ADM09**	Direttamente con 39DMA (senza adattatore) Directly with 39DMA (without adapter) Direkt mit 39DMA (ohne Adapter) Directement avec 39DMA (sans adaptateur) Directamente con 39DMA (sin adaptador) Directamente com 39DMA (sem adaptador)

code ADM...

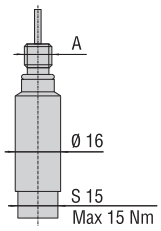

IT Adattatore per dispositivo 39DMCILA.

EN Adapter for 39DMCILA device.

DE Adapter für 39DMCILA Vorrichtung.

FR Adaptateur pour dispositif 39DMCILA.

ES Adaptador para dispositivo 39DMCILA.

PT Adaptador para dispositivo 39DMCILA.

⚠ ☞ **tab above.**

ACCESSORIES

code 39DDS-...

IT Dispositivo di scaricamento.
EN Discharging device.
DE Ablassvorrichtung.
FR Dispositif de déchargement.
ES Dispositivo de descarga.
PT Dispositivo de descarga.

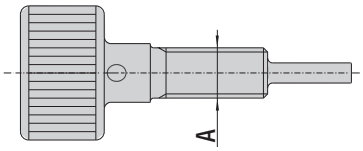

Code	39DDS-M6/1	39DDS-M6/2	39DDS-M6/3	39DDS-1/8G1	39DDS-1/8G
A	M6	M6	M6	G 1/8”	G 1/8”
Model	MCS K ML (rev. A) HR LI	NE (rev. A) SC (rev. B) H (rev. A) HR LI	NE (rev. B) NG M MS KE ML (rev. B + C) MV RS SC (rev. D) H (rev. C)	K ML (rev. A)	SC H HR LI LS KE ML (rev.B) S RV RS RF RT RG
			PHASING OUT		PHASING OUT
			39DDS01A		39DDS01A

code 39DDS01A

IT Dispositivo di scaricamento.
EN Discharging device.
DE Ablassvorrichtung.
FR Dispositif de déchargement.
ES Dispositivo de descarga.
PT Dispositivo de descarga.

A	M6
Model	NE (rev. B) NG M MS KE ML (rev. B + C) MP MQ RV RS SC (rev. D) H (rev. C)

A	G 1/8”
Model	SC H HR LI LS KE ML (rev.B) S RV RS RF RT RG

code 58UT029A

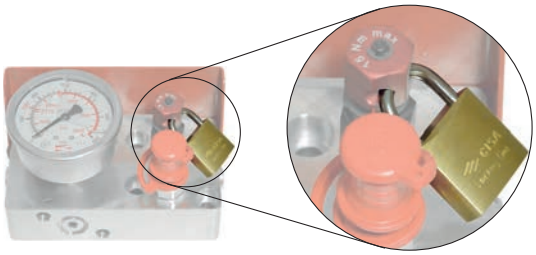

IT Lucchetto blocca valvola di scarico.
EN Padlock for discharge valve.
DE Vorhängeschloss für das Ablassventil.
FR Verrou pour soupape de décharge.
ES Candado de bloqueo de la válvula de descarga.
PT Cadeado para tramcar a valvula de descarregamento.

HOW TO USE IT

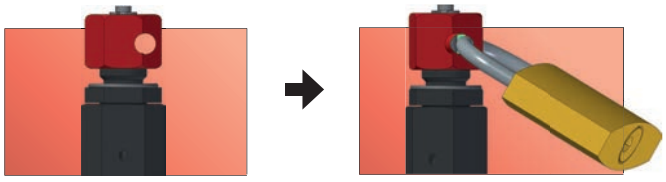

BENEFITS

IT Manutenzioni più sicure e con meno incidenti.
EN Safer maintenance and less accidents.
DE Mehr Sicherheit bei der Wartung und weniger Unfälle.
FR Un entretien plus sûr et moins d'accidents.
ES Mantenimientos más seguros y con menos accidentes.
PT Manutenção mais segura e com menos acidentes.

WHY TO USE IT

IT Per impedire caricamenti **NON autorizzati** durante la manutenzione.
EN To prevent **UNauthorized** charging during maintenance.
DE Um **unbefugtes** Befüllen zu verhindern bei der Wartung.
FR Pour empêcher le chargement **NON autorisé** pendant l'entretien.
ES Para impedir cargas **NO autorizadas** durante el mantenimiento.
PT Para impedir o carregamento **SEM autorização** durante a manutenção.

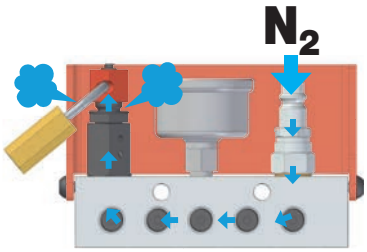

code 39SP01A

IT Sensore di pressione con display digitale. Collegando direttamente il sensore di pressione al controllo pressa è possibile impostare un range di lavoro desiderato al di fuori del quale il dispositivo invierà un segnale di allarme.

EN Pressure sensor with digital display. By connecting the pressure sensor directly to the press control, it is possible to set a desired working range outside which the unit sends an alarm signal.

DE Drucksensor mit Digitalanzeige. Wenn man den Drucksensor direkt an die Pressensteuerung anschließt, ist es möglich einen gewünschten Arbeitsbereich einzustellen, außerhalb dessen das Gerät ein Alarmsignal sendet.

FR Capteur de pression avec affichage numérique. En connectant le capteur de pression directement au système de contrôle de la presse, il est possible de définir une plage de fonctionnement souhaitée en dehors de laquelle l'unité envoie un signal d'alarme.

ES Sensor de presión con pantalla digital. Conectando directamente el sensor de presión al control de la prensa, es posible establecer un rango de trabajo deseado fuera del cual el dispositivo enviará una señal de alarma.

PT Sensor de pressão com display digital. Conectando o painel ao comando da prensa, é possivel determinar uma faixa de trabalho, que qualquer alteração desta faixa, o painel emitira um alarme.

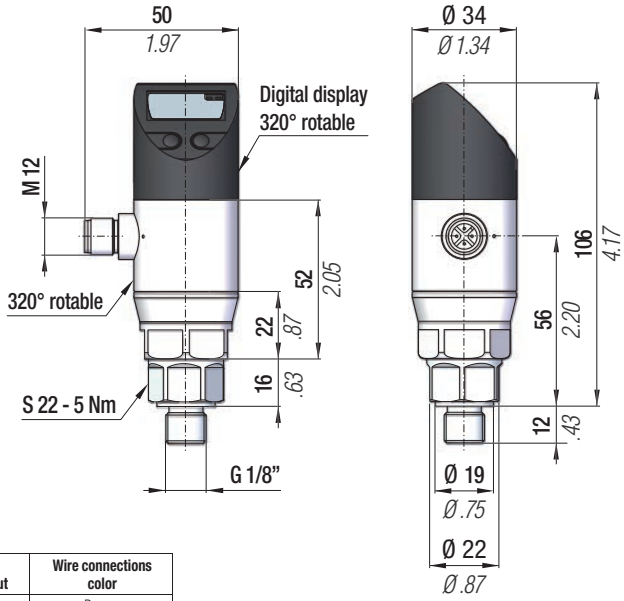

Technical data	
Electrical connector type	M12x1 - Male (4-pin)
Pressure connection	G 1/4" DIN 3852
Nominal pressure	0 - 600 bar
Burst pressure	1100 bar
Operating voltage Uo	18...36 V DC
Output current max.	500 mA
No-load supply current Io max	≤ 50 mA
Switching frequency f	200 Hz
Temperature range	- 25°C... + 85°C
Degree of protection as per IEC 60529	IP67 when connected
Output: digital data (switching points only)	2xPNP, NO/NC selection

Electrical connections	Sensors with switching output	Wire connections color
Supply +	1	Brown
Supply -	3	Blue
Signal +	-	White
Switching output 1	4	Black
Switching output 2	2	-
Shield	Connector housing	-

Sensor circuit diagram with 2 switching outpts

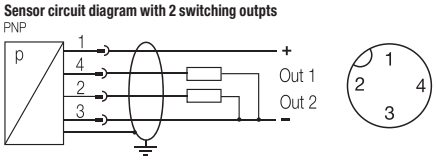

Always depressurize and disconnect pressure sensors from the power supply before establishing an electrical connection.

IT Tappo di sicurezza sovrapressione CE.

EN Overpressure safety plug CE.

DE Überdruck Sicherheitsstecker CE.

FR Bouchon de sécurité surpression CE.

ES Enchufe de seguridad sobrepresion CE.

PT Bujão de segurança sobrepressão CE.

code: TS - 300

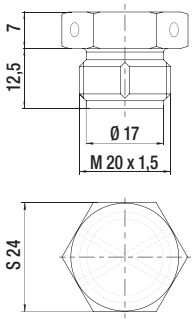

(300 bar)

code: 39TS360

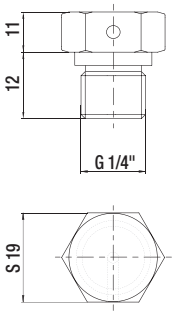

(360 bar)

code: 39TS460

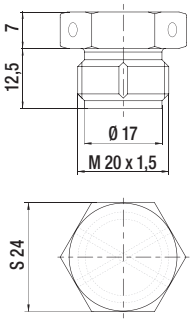

(460 bar)

---

code 58UT037A

IT Utensile per avvitare e svitare i cilindri SCF 250 e HF 500.

EN Tool to screw and unscrew gas springs SCF 250 and HF 500.

DE Schlüssel zum An- und Abschrauben von Gasdruckfedern SCF 250 und HF 500.

FR Outil pour visser et dévisser les ressorts à gaz SCF 250 et HF 500.

ES Herramienta para atornillar y desenroscar resortes de gas SCF 250 y HF 500.

PT Ferramenta para parafusar e desaparafusar molas a gás SCF 250 e HF 500.

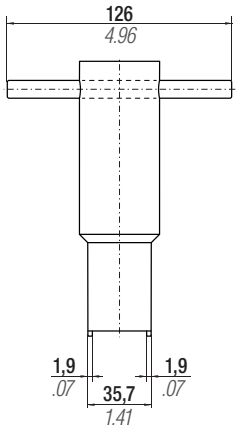

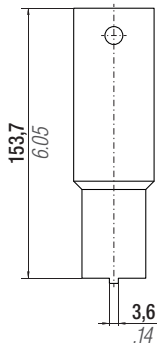

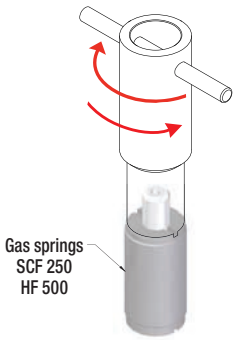

*All dimensions in **mm**/inch*

ACCESSORIES

IT Chiave dinamometrica con accessori.
EN Torque wrench with accessories.
DE Drehmomentschlüssel mit Zubehör.
FR Clé dynamométrique avec ses accessoires.
ES Llave dinamométrica con accesorios.
PT Chave dinamométrica com acessórios.

code	Torque force Nm
58UT025A	4 - 40

code
58UT013A

code	size mm	size inch
58UT009A	3	0.12
58UT010A	4	0.16
58UT011A	6	0.24
58UT012A	8	0.31

code	size mm	size inch
58UT014A	10	0.39
58UT015A	12	0.47
58UT016A	14	0.55
58UT017A	15	0.59
58UT018A	17	0.67
58UT019A	18	0.71
58UT020A	19	0.75

ORDERING EXAMPLE

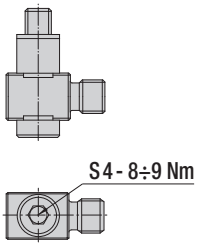

58UT025A + 58UT013A + 58UT010A

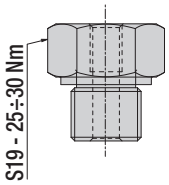

58UT025A + 58UT020A

WARNING PLATE

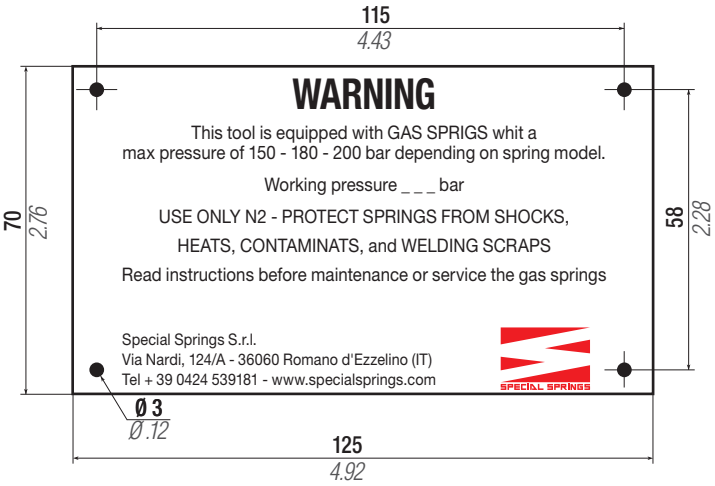

IT	Targhetta	Codice	39 TAR-I
EN	Advice plate	Code	39 TAR-GB
DE	Schilder	Bestell-nummer	39 TAR-D
FR	Plaquettes	Référence	39 TAR-F
ES	Placas	Codigo	39 TAR-E
PT	Etiquetas	Codigo	39 TAR-P

ACCESSORIES

code	Tools set	Accessories set
CMC	✓	✓

IT Set completo per manutenzione cilindri.
EN Complete maintenance kit for cylinders.
DE Komplettes Wartungsset für Gasdruckfedern.
FR Kit d'entretien complet pour ressorts à gaz.
ES Kit de mantenimiento completo para resortes de gas.
PT Kit de manutenção completo para cilindros.

code	Tools set	Accessories set
CMCT	✓	✗

IT Solo set utensili per manutenzione cilindri.
EN Tool set only for cylinders' maintenance.
DE Nur Werkzeugsset zur Wartung von Gasdruckfedern.
FR Set d'outils pour l'entretien de ressorts à gaz.
ES Set de herramientas para mantenimiento de resortes de gas.
PT Conjunto de ferramentas pela manutenção dos cilindros.

code	Tools set	Accessories set (specific family of cylinders)
CMC - ...	✗	✓

IT Set accessori per determinata famiglia di cilindri (es. CMC-SC 10000).
EN Set of accessories for a specific family of cylinders (ex. CMC-SC 10000).
DE Zubehörset für bestimmte Zylindertypen (z. B. CMC-SC 10000).
FR Jeu d'accessoires pour une famille donnée de cylindres (ex.: CMC-SC 10000).
ES Set de accesorios para una determinada familia de cilindros (p.ej. CMC-SC 10000).
PT Acessórios de conjunto para determinada família de cilindros (ex. CMC-SC 10000).

code 58CD01

IT Cacciavite dinamometrico per valvola unidirezionale.
EN Torque screwdriver for one-way valve.
DE Drehmomentschrauber für Rückschlagventil.
FR Tournevis dynamométrique pour valve anti-retour.
ES Destornillador dinamométrico para válvula anti-retorno.
PT Chave torquimétrica para válvula de retenção.

code 39PM02A

IT Pressa manuale per assemblaggio stelo, boccola e anello di ritegno a C.
EN Table manual press for assembly of rod, bushing and retaining C-ring.
DE Manuelle Presse zur Montage von Kolbenstange, Buchse und Sprengring.
FR Presse manuelle pour l'assemblage de la tige, douille et bague d'étanchéité en C.
ES Prensa manual para ensamblaje vastago, casquillo y anillo de retención a C.
PT Prensa manual para ensambladura haste, bucha e anel de retenção a C.

code 59VU02

IT Valvola unidirezionale (esclusi M50, M70, M90-TBM/TEM/TBI, MS90, M200, MS200).
EN One-way valve (excluding M50, M70, M90-TBM/TEM/TBI, MS90, M200, MS200).
DE Rückschlagventil (außer M50, M70, M90-TBM/TEM/TBI, MS90, M200, MS200).
FR Valve anti-retour (à l'exclusion de M50, M70, M90-TBM/TEM/TBI, MS90, M200, MS200).
ES Válvula anti-retorno (excepto M50, M70, M90-TBM/TEM/TBI, MS90, M200, MS200).
PT Válvula de retenção (excluindo M50, M70, M90-TBM/TEM/TBI, MS90, M200, MS200).

code 39RFG

IT Spray rivelatore di fughe.
EN Gas detector.
DE Gasdetektor Spray.
FR Spray détecteur de fuites de gaz.
ES Spray detector de escapes de gas.
PT Spray revelador de fugas de gàs.

ACCESSORIES

IT Attacco per bombola.
EN Connection for bottle.
DE Ansatz für die Flasche.
FR Décapage pour bombonne.
ES Ataque a la Bombona.
PT Ataque a Bottle.

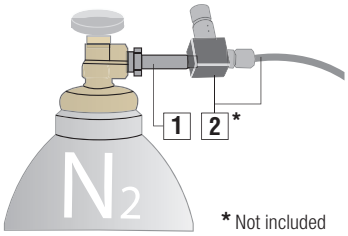

* Not included

Installation Example

1	Attacco per bombola Connection for bottle Ansatz für die Flasche Décapage pour bombonne Ataque a la Bombona Ataque a Bottle	2*	Tubo collegamento bombola con valvola di scarico Connecting hose from the bottle to the valve discharging Verbindung Schlauche des Flasche mit Auslassventil Tube pour la connexion bombonne avec valve de décharge Tubo de conexión de la Bombona con la válvula de descarga Tubo de ligação Frasco com a válvula de descarga

code	X	Box content	Country
47TB	W 21,7x1/14'' - Male - ISO 228		IT - Italy PT - Portugal
47TB01	-		CN - China KR - South Korea
47TB02	W 22,5 - 14 t.p.i JIS B 8246 - Male		JP - Japan ID - Indonesia
47TB03	W 24,32x1/14'' - DIN 477 - 1 Female (for bottles up to 200 bar / *2900 psi*)		DE - Germany
47TB04	d 21,7x1,814 - NF E 29 - 650 - Female	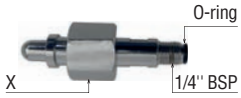	FR - France
47TB05	G 5/8'' - ISO 228 - Male	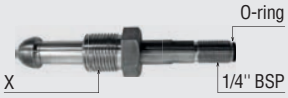	IN - India
47TB06	G 3/4'' - ISO 228 - Female		RU - Russia
47TB07	0.960 - 14 NGO - RH - Male (for bottles up to 206 bar / *3000 psi*)	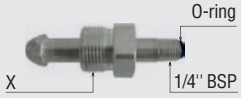	US - United States
47TB08	1.040 - 14 NGO - RH - Male (for bottles from 206 bar / *3000 psi* to 324 bar / *4700 psi*)		US - United States
■ 47TB09	W 21,7x1/14 - Female		ES - Spain
■ 47TB10	W 24,32x1/14 - DIN 477 - 1 - Female		KR - South Korea
■ 47TB11	W 30x2 - DIN 477 - 5 - Female (for bottles from 200 bar / *2900 psi* to 300 bar / *4351 psi*)		DE - Germany
■ 47TB12	G 3/4A - RH IS 3224 - Female		IN - India
■ 47TB13	W 22 - 14 t.p.i JIS B 8246 - Male	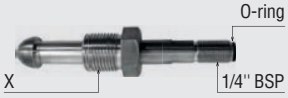	JP - Japan
■ 47TB14	W 30x2 - DIN 477 - 5 - Male (for bottles from 200 bar / *2900 psi* to 300 bar / *4351 psi*)		PT - Portugal

ACCESSORIES

code: Phasing out	code: New	Box content 1 + 2	Country
39RP (max. inlet pressure 200 bar / 2900 psi)	39RHP (max. inlet pressure 300 bar / 4350 psi)	+	IT - Italy PT - Portugal
39RP01 (max. inlet pressure 200 bar / 2900 psi)	39RHP01 (max. inlet pressure 300 bar / 4350 psi)	+	CN - China KR - South Korea
39RP02 (max. inlet pressure 200 bar / 2900 psi)	39RHP02 (max. inlet pressure 300 bar / 4350 psi)	+	JP - Japan ID - Indonesia
39RP03 (max. inlet pressure 200 bar / 2900 psi)	39RHP03 (max. inlet pressure 300 bar / 4350 psi)	(for bottles up to 200 bar / *2900 psi*) +	DE - Germany
39RP04 (max. inlet pressure 200 bar / 2900 psi)	39RHP04 (max. inlet pressure 300 bar / 4350 psi)	+	FR - France
39RP05 (max. inlet pressure 200 bar / 2900 psi)	39RHP05 (max. inlet pressure 300 bar / 4350 psi)	+	IN - India
39RP06 (max. inlet pressure 200 bar / 2900 psi)	39RHP06 (max. inlet pressure 300 bar / 4350 psi)	+	RU - Russia
39RP07 (max. inlet pressure 200 bar / 2900 psi)	39RHP07 (max. inlet pressure 300 bar / 4350 psi)	(for bottles up to 206 bar / *3000 psi*) +	US - United States
39RP08 (max. inlet pressure 200 bar / 2900 psi)	39RHP08 (max. inlet pressure 300 bar / 4350 psi)	(for bottles from 206 bar / *3000 psi* to 324 bar / *4700 psi*) +	US - United States
39RP09 (max. inlet pressure 200 bar / 2900 psi)	39RHP09 (max. inlet pressure 300 bar / 4350 psi)	+	ES - Spain
39RP10 (max. inlet pressure 200 bar / 2900 psi)	39RHP10 (max. inlet pressure 300 bar / 4350 psi)	+	KR - South Korea
39RP11 (max. inlet pressure 200 bar / 2900 psi)	39RHP11 (max. inlet pressure 300 bar / 4350 psi)	(for bottles from 200 bar / *2900 psi* to 300 bar / *4351 psi*) +	DE - Germany
39RP12 (max. inlet pressure 200 bar / 2900 psi)	39RHP12 (max. inlet pressure 300 bar / 4350 psi)	+	IN - India
39RP13 (max. inlet pressure 200 bar / 2900 psi)	39RHP13 (max. inlet pressure 300 bar / 4350 psi)	+	JP - Japan
39RP14 (max. inlet pressure 200 bar / 2900 psi)	39RHP14 (max. inlet pressure 300 bar / 4350 psi)	(for bottles from 200 bar / *2900 psi* to 300 bar / *4351 psi*) +	PT - Portugal

IT Riduttore di pressione completo di attacco bombola per controllare e ridurre la pressione.

EN Pressure reducer complete with cylinder connection to control and reduce the pressure.

DE Druckminderer vollstaending mit Flasche verbindungs, um die Druck zu uberwaechen und verringern.

FR Réducteur de pression complet avec jonction de bouteille pour contrôler et réduire la pression.

ES Reductor de presión completo con enganche de las bombonas para controlar y reducir la presión.

PT Redutor de pressão completo com engate para controlar e reduzir a pressão.

Example code: 39RHP

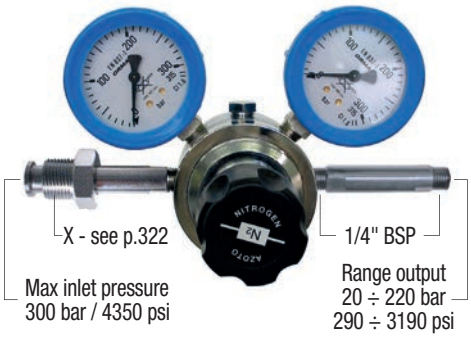

Installation Example

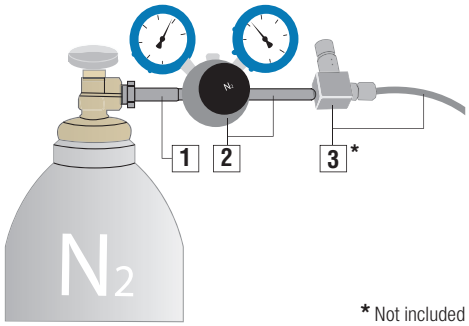

* Not included

1	Attacco per bombola Connection for bottle Ansatz für die Flasche Décapage pour bombonne Ataque a la Bombona Ataque a Bottle	2	Riduttore di pressione Pressure reducer Druckminderer Réducteur de pression Reductor de presión Redutor de pressão

3*	Tubo collegamento bombola con valvola di scarico Connecting hose from the bottle to the valve discharging Verbindung Schlauche des Flasche mit Auslassventil Tube pour la connexion bombonne avec valve de décharge Tubo de conexión de la Bombona con la válvula de descarga Tubo de ligação Frasco com a válvula de descarga

ACCESSORIES

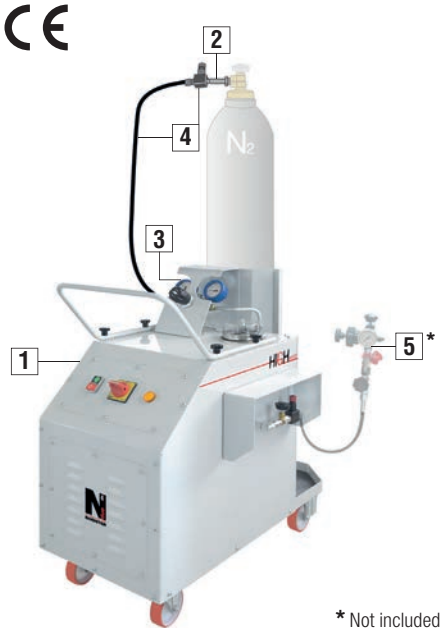

* Not included

code	Box content 1 + 2 ☞ p. 320	Power suppy	Country	Kg
39NCU01B	Booster + 47TB	220 ÷ 240 VAC 50 ÷ 60 Hz	Italy - Portugal	91 kg *200 lbs*
39NCU10B	Booster + 47TB01	220 ÷ 240 VAC 50 ÷ 60 Hz	China - Korea	91 kg *200 lbs*
39NCU11B	Booster + 47TB02	220 ÷ 240 VAC 50 ÷ 60 Hz	Indonesia	91 kg *200 lbs*
39NCU12B	Booster + 47TB03	220 ÷ 240 VAC 50 ÷ 60 Hz	Germany	91 kg *200 lbs*
39NCU13B	Booster + 47TB04	220 ÷ 240 VAC 50 ÷ 60 Hz	France	91 kg *200 lbs*
39NCU14B	Booster + 47TB05	220 ÷ 240 VAC 50 ÷ 60 Hz	India	91 kg *200 lbs*
39NCU15B	Booster + 47TB06	220 ÷ 240 VAC 50 ÷ 60 Hz	Russia	91 kg *200 lbs*
39NCU22B	Booster + 47TB07	120 VAC 50 ÷ 60 Hz	USA	116 kg *255 lbs*
39NCU23B	Booster + 47TB08	120 VAC 50 ÷ 60 Hz	USA	116 kg *255lbs*
39NCU29B	Booster + 47TB09	220 ÷ 240 VAC 50 ÷ 60 Hz	Spain	91 kg *200 lbs*
39NCU31B	Booster + 47TB010	220 ÷ 240 VAC 50 ÷ 60 Hz	Korea	91 kg *200 lbs*
39NCU32B	Booster + 47TB011	220 ÷ 240 VAC 50 ÷ 60 Hz	Germany	91 kg *200 lbs*
39NCU33B	Booster + 47TB12	220 ÷ 240 VAC 50 ÷ 60 Hz	India	91 kg *200 lbs*
39NCU34B	Booster + 47TB13	100 VAC 50 ÷ 60 Hz	Japan	116 kg *255 lbs*
39NCU40B	Booster + 47TB14	220 ÷ 240 VAC 50 ÷ 60 Hz	Portugal	91 kg *200 lbs*
39NCU41B	Booster + 47TB02	100 VAC 50 ÷ 60 Hz	Japan	116 kg *255lbs*

1	Booster carrellato per il caricamento di grandi volumi di azoto, con azionamento elettro-idraulico per la massima velocità Wheeled Booster for the filling of large volumes of nitrogen, with electro-hydraulic start-up for the maximum speed Ein fahrbares Booster, für die Ladung aus großen Mengen von Stickstoff, mit elektrohydraulischer Antrieb für die Maximaldrehzahl Booster à chariot, pour la charge de grands volumes d'azote, avec actionnement électro-hydraulique pour la vitesse maximum Booster sobre ruedas para la carga de grandes volúmenes de nitrógeno con accionamiento electro-hidráulico para la velocidad máxima Booster rodado para o carregamento de grandes volumes de nitrogênio com acionamento eletro-hidráulico para a velocidade máxima	2	Attacco per bombola Connection for bottle Ansatz für die Flasche Décapage pour bombonne Ataque a la Bombona Ataque a Bottle
3	Riduttore di pressione Pressure reducer Druckminderer Réducteur de pression Reductor de presión Redutor de pressão	4	Tubo collegamento bombola con valvola di scarico Connecting hose from the bottle to the valve discharging Verbindung Schlauche des Flasche mit Auslassventil Tube pour la connexion bombonne avec valve de décharge Tubo de conexión de la Bombona con la válvula de descarga Tubo de ligação Frasco com a válvula de descarga	5*	Dispositivo di caricamento DMA Charging device DMA Ladung Vorrichtung DMA Dispositif de charge DMA Dispositivo de carga DMA Dispositivo de carregamento de DMA

Direct to N2 bottle ☞ p. 322

IT **Caratteristiche - vantaggi**

- Massima sicurezza, minimi tempi di caricamento
- Arresto automatico alla pressione impostata
- Segnale luminoso di fine ciclo
- Valvola di sicurezza per sovrapressione
- Pompa elettrica
- Pressione di uscita regolabile
- Telaio carrellato con alloggiamento bombola N2
- Utilizzare con set di caricamento DMA (opzionale)

La fornitura comprende: Unità booster, 3 mt di tubo per collegamento a bombola o riduttore di pressione + attacco per bombola.

EN **Features - advantages**

- Maximum safety, low charging time
- Automatic stop when the set pressure is reached
- Light indicator of cycle end
- Safety valve for overpressure
- Electric pump
- Adjustable output pressure
- Wheeled cart with N2 bottle housing
- To be used with charging set DMA (optional)

The supply includes: Booster unit, 3 mt hose for connecting the bottle or pressure reducer + bottle connection.

DE **Eigenheiten - Vorteile**

- Maximale Sicherheit, minimale Befüllzeiten
- Automatischers Anhalten beim Erreichen des Drucks
- Leuchtsignal bei Zyklusende
- Überdruck-Sicherheitsventil
- Elektrische Pumpe
- Einstellbarer Output-Druck
- Fahrbares Gestell mit Ablagefach für N2-Gasflasche
- Zum Einsatz mit der DMA Ladevorrichtung (optional)

Die Lieferung beinhaltet: Booster Gerät, 3 Meters Schlauch für den Anschluss zur Flasche oder zum Druckminderer + Ansatz für die Flasche.

FR **Caractéristiques - avantages**

- Securité maximum, temps de chargemet minimum
- Arrêt automatique à la pression établie
- Signal lumineux de fin de cycle
- Valve de securité pour la surpression
- Pompe électrique
- Pression de sortie réglable
- Châssis à chariot avec logement de bonbonne N2
- À utiliser avec le set de chargement DMA (en option)

La fourniture inclut: Unité booster, 3 mt de tube pour la connexion à la bombonne ou au réducteur de pression + Décapage bombonne.

ES **Características - Ventajas**

- Máxima seguridad, tiempo mínimo de carga
- Parada automática en la presión elegida
- Señal luminosa de final de ciclo
- Válvula de seguridad para sobrepresión
- Bomba eléctrica
- Presión de salida regulable
- Chasis sobre ruedas y alojamiento para botella de N2
- Utilizar combinado con set de carga DMA (opcional)

El suministro incluye: Unidad Booster, tubo de 3 mt para conexión a la bombona o al reductor de presión + Ataque Bombona.

PT **Características - Benefícios**

- Máxima segurança, tempos de carregamento mais baixos
- Paragem automática quando atingida a pressão especificada
- Sinal luminoso de fim de ciclo
- Válvula de segurança activa sobrepressão
- Bomba eléctrica
- Saída de pressão ajustável
- Quadro rodado com alojamento para tank N2
- Utilizado com o conjunto de carregamento DMA (opcional)

O fornecimento inclui: Unidade Booster, 3 mt tubo para ligação ao cilindro de azoto ou de redutor de pressão + Ataque a Bottle.

	BOOSTER Pmax	N2 Pmin BOOSTER	BOOSTER Vm	°F °C	H L P L x P x H	Kg
0,85 kW see power supply	210 bar *3045 psi*	30 bar *435 psi*	1300 NL / min *	0 - 45 °C *32 - 113 °F*	600 x 560 x 680 mm *24 x 22 x 27 inch*	See tab.

* Il rendimento volumetrico varia in funzione di PN_2 - The volumetric efficiency varies according to PN_2 - Der Liefergrad ändert sich in Abhängigkeit vom PN_2
Le rendement volumétrique varie en fonction de PN_2 - El rendimiento volumétrico varía en función de Pair et PN_2- O rendimento volumétrico varia em função da PN_2

ACCESSORIES

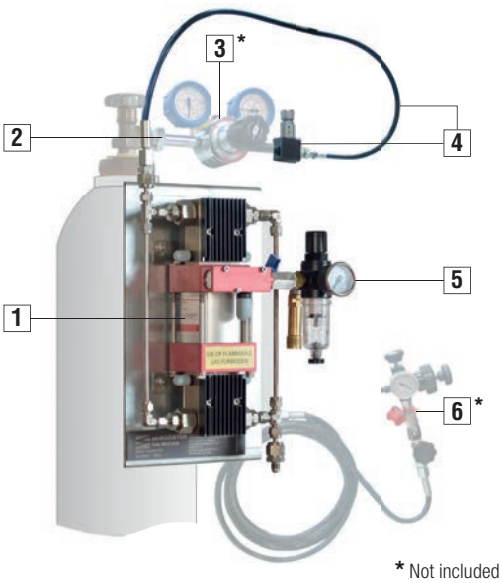

* Not included

To N2 bottle with pressure reducer
p. 323

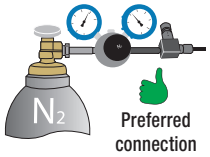

Direct to N2 bottle
p. 322

code	Box content 1 + 2 p. 320	Country
39NCU03A	AirBooster + 47TB	Italy - Portugal
39NCU04A	AirBooster + 47TB01	China - Korea
39NCU05A	AirBooster + 47TB02	Japan - Indonesia
39NCU06A	AirBooster + 47TB03	Germany
39NCU07A	AirBooster + 47TB04	France
39NCU08A	AirBooster + 47TB05	India
39NCU09A	AirBooster + 47TB06	Russia
39NCU26A	AirBooster + 47TB07	USA
39NCU27A	AirBooster + 47TB08	USA
39NCU28A	AirBooster + 47TB09	Spain
39NCU35A	AirBooster + 47TB010	Korea
39NCU36A	AirBooster + 47TB011	Germany
39NCU37A	AirBooster + 47TB12	India
39NCU38A	AirBooster + 47TB13	Japan
39NCU39A	AirBooster + 47TB14	Portugal

1	Booster portatile compatto per caricamento azoto con azionamento pneumatico Compact portable booster for the filling of nitrogen, with pneumatic start-up Ein kompakter und Portabler Booster für die Ladung von Stickstoff, mit pneumatischer Betätigung Booster compacte et portable pour la charge avec azote, avec actionnement pneumatique Booster compacto y portátil para la carga con nitrógeno con accionamiento neumático Booster compacto e portátil para carregar com nitrogênio com acionamento pneumático	2	Attacco per bombola Connection for bottle Ansatz für die Flasche Décapage pour bombonne Ataque a la Bombona Ataque a Bottle	3*	Riduttore di pressione Pressure reducer Druckminderer Réducteur de pression Reductor de presión Redutor de pressão
4	Tubo collegamento bombola con valvola di scarico Connecting hose from the bottle to the valve discharging Verbindung Schlauche des Flasche mit Auslassventil Tube pour la connexion bombonne avec valve de décharge Tubo de conexión de la Bombona con la válvula de descarga Tubo de ligação Frasco com a válvula de descarga	5	Valvola sicurezza e ingresso aria Safety valve and air inlet Sicherheit Ventile und Luft Eingang Valve de sécurité et entrée de l'air Válvula de Seguridad y ingreso aire Válvula de segurança e entrada de ar	6*	Dispositivo di caricamento DMA Charging device DMA Ladung Vorrichtung DMA Dispositif de charge DMA Dispositivo de carga DMA Dispositivo de carregamento de DMA

IT **Caratteristiche - Vantaggi**

- Compatto, leggero e portabile
- Massimo utilizzo del volume bombola N2
- Installazione diretta su bombola N2
- Valvola di sicurezza output N2 max 220 bar

La fornitura comprende: Unità booster completa di valvola di sicurezza, supporto per bombola, 1 mt di tubo per collegamento a bombola o riduttore di pressione + attacco per bombola.

EN **Features - Advantages**

- Compact, light and portable
- Max use of the nitrogen bottle N2
- Direct installation on the N2 bottle
- Safety N2 output valve max 220 bar

The supply includes: Booster unit provided with safety valve, bottle support, 1 mt hose for connecting the bottle or pressure reducer + bottle connection.

DE **Eigenschaften - Vorteilen**

- Kompakt, licht und portable
- Maximaler Nutzung der Stickstoffflasche N2
- Direkter Installation am Stickstoffflasche N2
- Sicherheit Ventile von N2 Ausgabe, max. 220 bar

Die Lieferung beinhaltet: Booster Gerät versehen mit Sicherheit Ventile, träger für die Stickstoffflasche, meters Schlauch für den Anschluss zur Flasche oder zum Druckminderer + Ansatz für die Flasche.

FR **Caractéristiques - Avantages**

- Compacte, léger et portable
- Utilisation maximale de la bombonne d'azote N2
- Installation directe sur la bombonne d'azote N2
- Valve de sortie N2 sécurisé max 220 bar

La fourniture inclut: Unité booster équipé avec valve de sécurité, support pour bombonne, 1 mt de tube pour la connexion à la bombonne ou au réducteur de pression + Décapage bombonne.

ES **Características - Ventajas**

- Compacto, ligero y portátil
- Uso máximo de la bombona de nitrógeno N2
- Instalación directamente sobre la bombona de N2
- Válvula de seguridad, output N2 max 220 bar

El suministro incluye: Unidad Booster equipado con válvula de seguridad, soporte para la bombona de nitrógeno, tubo de 1 mt para la conexión a la bombona o al reductor de presión + Ataque Bombona.

PT **Características - Benefícios**

- Compacto, leve e portátil
- Máxima utilização do cilindro de nitrogênio N2
- Instalação directamente sobre o cilindro de N2
- Válvula de segurança, saída máxima de 220 bar N2

O fornecimento inclui: Unidade Booster equipado com válvula de segurança, o suporte para o cilindro de nitrogênio, 1 mt tubo para ligação ao cilindro de azoto ou de redutor de pressão + Ataque a Bottle.

	BOOSTER Pmax	N2 Pmin BOOSTER	BOOSTER Vm	°F °C	H L P L x P x H	Kg
AIR 1 - 10 bar *15 - 145 psi*	220 bar *3190 psi*	30 bar *435 psi*	280 NL / min *	0 - 45 °C *32 - 113 °F*	230 x 350 x 230 mm *9 x 13 x 9 inch*	10,8 Kg *23,8 lbs*

* Il rendimento volumetrico varia in funzione di Pair e PN_2 - The volumetric efficiency varies according to Pair and PN_2 - Der Liefergrad ändert sich in Abhängigkeit vom Pair und PN_2
Le rendement volumétrique varie en fonction de Pair et PN_2 - El rendimiento volumétrico varía en función de Pair et PN_2 - O rendimento volumétrico varia em função da Pair e PN_2

ACCESSORIES

IT Trolley completo di AirBooster e dispositivo 39DMA.

EN Trolley with AirBooster and charging device 39DMA.

DE Trolley mit AirBooster und Füll- und Kontroll-armatur 39DMA.

FR Chariot avec AirBooster et kit de chargement 39DMA.

ES Maleta completa con AirBooster y dispositivo 39DMA.

PT Maleta completa com Booster e Kit de carre-gamento 39DMA.

AirBooster p. 325

39DMA p. 316

code	Box content	Country
39KNCU03A	39NCU03A + 39DMA	Italy - Portugal
39KNCU04A	39NCU04A + 39DMA	China - Korea
39KNCU05A	39NCU05A + 39DMA	Japan - Indonesia
39KNCU06A	39NCU06A + 39DMA	Germany
39KNCU07A	39NCU07A + 39DMA	France
39KNCU08A	39NCU08A + 39DMA	India
39KNCU09A	39NCU09A + 39DMA	Russia
39KNCU26A	39NCU26A + 39DMA	USA
39KNCU27A	39NCU27A + 39DMA	USA
39KNCU28A	39NCU28A + 39DMA	Spain
39KNCU35A	39NCU35A + 39DMA	Korea
39KNCU36A	39NCU36A + 39DMA	Germany
39KNCU37A	39NCU37A + 39DMA	India
39KNCU38A	39NCU38A + 39DMA	Japan
39KNCU39A	39NCU39A + 39DMA	Portugal

IT **Caratteristiche**

Trolley con struttura antiurto e valvola pressurizzata per lo spostamento aereo e la sicurezza dei dispositivi all'interno.

EN **Features**

Trolley with shock-resistant structure and pressure relief valve for transport in the aircraft and safe storage of the contents.

DE **Eigenheiten**

Trolley mit stoßfester Struktur und Über-druckventil für den Transport im Flugzeug und ein sicheres Verstauen des Inhalts.

FR **Caractéristiques**

Chariot avec structure résistante aux chocs et soupape de surpression pour le transport dans l'avion et le stockage sécurisé du contenu.

ES **Características**

Maleta con estructura a prueba de golpes y válvula presurizada para viajes aéreos y para la seguridad de los dispositivos en el interior.

PT **Características**

Maleta de ferramentas com estrutura reforçada e pressurizada para viagens aéreas garantindo a segurança dos equipamentos.

ACCESSORIES

IT Stazione mobile per caricamento, controllo forza e manutenzione dei cilindri a gas.

EN Mobile service station for charging, force testing and maintenance of gas springs.

DE Mobile Servicestation zum Befüllen, zur Druckkontrolle und zur Wartung der Gasdruckfedern.

FR Station de service mobile pour le chargement, la mesure de force et la maintenance de ressorts à gaz.

ES Estación móvil para carga, control de fuerza y mantenimiento de cilindros de gas.

PT Estação de trabalho movel para carregamento, ajuste de força e manutenção dos cilindros.

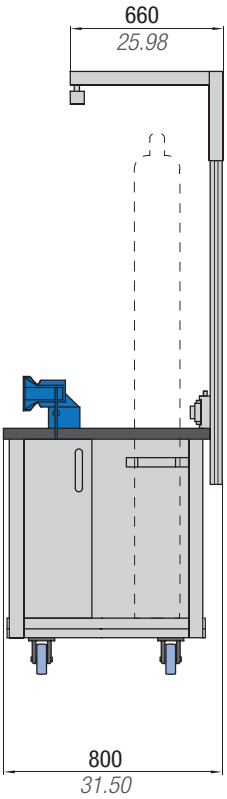

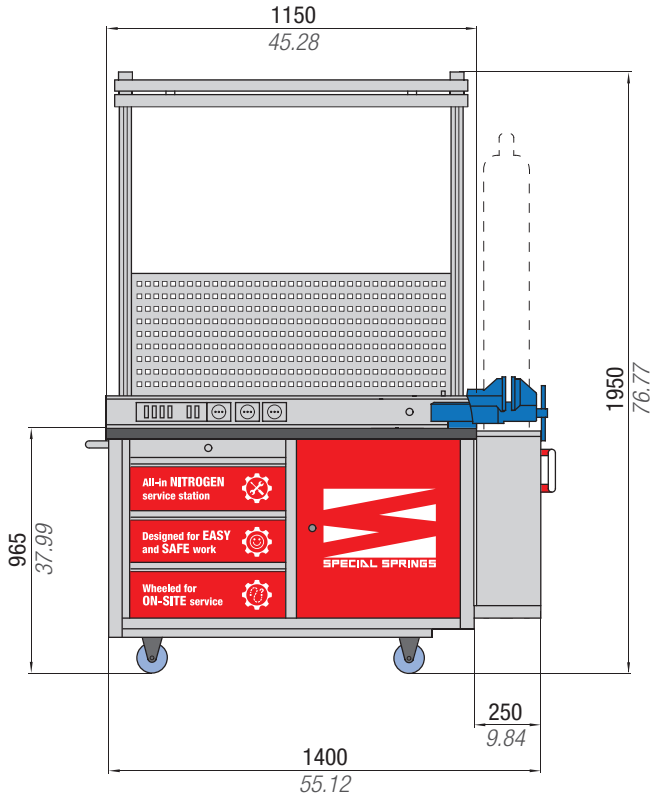

code	Country
39UT027A	Italy - Denmark Egypt - Russia Austria - Indonesia India - Greece Holland - Romania Finlandia Czech Republic Spain - France Slovenia - Portugal Turkey - Korea Germany
39UT031A	Japan - Usa
39UT032A	Belgium - France
39UT033A	United Kingdom
39UT034A	Brasil
39UT036A	China

IT Vantaggi

- Unica postazione per strumenti e kit.
- Elevata mobilità.
- Maggior sicurezza e comodità per ogni operazione.
- Predisposizione ancoraggio force tester.

EN Advantages

- All-in-one station for all tools and devices.
- High mobility.
- More safety and comfort for each operation.
- Prepared for mounting of force tester.

DE Vorteile

- All-in-one Servicestation für Werkzeuge und Reparatursätze.
- Hohe Mobilität.
- Mehr Sicherheit und Komfort bei jedem Arbeitsschritt.
- Aufnahme zur Befestigung des Kraftmessgeräts.

FR Avantages

- Station tout-en-un pour tous outils et appareils.
- Grande mobilité.
- Plus de sécurité et de confort pour chaque opération.
- Préparé pour le montage du testeur de force.

ES Ventajas

- Estación de trabajo para instrumentos y kits.
- Alta movilidad.
- Mayor seguridad y comodidad para cada operación.
- Predisposición al anclaje de probador de fuerza.

PT Benefícios

- Todas as ferramentas e kit de carregamento em um so lugar.
- Total mobilidade.
- Maior segurança e comodidade.
- Ja preparada para o Dinamometro.

IT Dati tecnici

- 3 cassetti (1 con vaschetta raccogli olio) + anta per riporre kit e tools.
- Piano di lavoro 1400 x 685 x 40 mm.
- Lampada a led con interruttore.
- Attacco aria compressa da 1/4".
- 3 prese elettriche.
- Morsa parallela 130 mm.
- Protezione operatore da proiezione parti in fase di caricamento.

EN Technical Data

- 3 drawers (one with oil drain pan) + compartment closed with door for storing kits and tools.
- Worktop 1400 x 685 x 40 mm.
- LED light with switch.
- Compressed air supply 1/4".
- 3 power sockets.
- Parallel vice 130 mm.
- Operator's protection against projection of parts during charging.

DE Technische Daten

- 3 Schubladen (davon eine mit Ölauffangwanne) + mit Tür verschlossenes Fach zur Aufbewahrung von Reparatursätzen und Werkzeugen.
- Arbeitsplatte 1400 x 685 x 40 mm.
- LED-Leuchte mit Schalter.
- 1/4" Druckluftanschluss.
- 3 Steckdosen.
- Parallelschraubstock 130 mm.
- Schutz des Bedieners gegen das Herausspringen von Teilen beim Befüllen.

FR Données techniques

- 3 tiroirs (un avec bac de récupération d'huile) + compartiment fermé avec porte pour ranger kits et outils.
- Plan de travail 1400 x 685 x 40 mm.
- Lumière LED avec interrupteur.
- Alimentation en air comprimé 1/4".
- 3 prises de courant.
- Étau parallèle 130 mm.
- Protection de l'opérateur contre la projection de pièces lors du chargement.

ES Datos técnicos

- 3 cajones (1 con bandeja de recogida de aceite) + puerta para guardar kit y herramientas.
- Encimera 1400 x 685 x 40 mm.
- Lámpara LED con interruptor.
- Conexión de aire comprimido de 1/4".
- 3 enchufes eléctricos.
- Tornillo de banco 130 mm.
- Protección del operador contra la proyección de piezas durante la carga.

PT Dados tecnicos

- 3 Gavetas (1 com espaçoes demarcados para os kits de manutenção) as outras para armazenar instrumentos e ferramentas.
- Mesa de trabalho de 1400 x 685 x 40mm.
- Lampada de LED com interruptor.
- Saida para ar comprimido 1/4".
- 3 tomadas.
- Morsa paralela de 130mm.
- Proteção para o operador enquanto carrega os cilindros.

ACCESSORIES - DIGITAL FORCE TESTER

	code 39FT2000	code 39FT00250A	code 39FT00500A
Measuring range	0 ÷ 2000 daN *0 ÷ 4496 lb*	0 ÷ 250 daN *0 ÷ 562 lb*	0 ÷ 500 daN *0 ÷ 1124 lb*
Recommended for FO	0 ÷ 1500 daN *0 ÷ 3372 lb*	0 ÷ 250 daN *0 ÷ 562 lb*	250 ÷ 500 daN *562 ÷ 1124 lb*
Max. length	430 mm *16.93 inch*	430 mm *16.93 inch*	430 mm *16.93 inch*
Max. diameter	75 mm *2.95 inch*	45 mm *1.77 inch*	45 mm *1.77 inch*
Accuracy according EN ISO 7500-1	-	CLASS 1 (± 1%)	CLASS 1 (± 1%)
Power supply	Battery (included)	100 - 240 VAC 50-60 Hz	100 - 240 VAC 50-60 Hz
L x P x H	255 x 310 x 1300 mm *10.04 x 12.20 x 51.18 inch*	385 x 250 x 1075 mm *15.16 x 9.84 x 42.32 inch*	385 x 250 x 1075 mm *15.16 x 9.84 x 42.32 inch*
Weight	22 Kg *48.50 lb*	82 Kg *180.78 lb*	82 Kg *180.78 lb*

code 59VCATM02

1

DIGITAL DISPLAY

code 59RE150

2

DIGITAL LINEAR SCALE

ACCESSORIES - DIGITAL FORCE TESTER

	code 39FT07500A	code 39IPCDIG
Measuring range	0 ÷ 7500 daN *0 ÷ 16861 lb*	0 ÷ 20000 daN *0 ÷ 44962 lb*
Recommended for FO	500 ÷ 7500 daN *1124 ÷ 16861 lb*	7500 ÷ 20000 daN *16861 ÷ 44962 lb*
Max. length	400 mm *15.75 inch*	760 mm *29.92 inch*
Max. diameter	120 mm *4.72 inch*	195 mm *47.68 inch*
Accuracy according EN ISO 7500-1	CLASS 1 (± 1%)	CLASS 1 (± 1%)
Power supply	100 - 240 VAC 50-60 Hz	100 - 240 VAC 50-60 Hz
L x P x H	385 x 260 x 1350 mm *15.16 x 10.24 x 53.15 inch*	500 x 250 x 1462 mm *19.69 x 9.84 x 57.56 inch*
Weight	82 Kg *180.78 lb*	210 Kg *462.97 lb*

code 59VCATM02

1 DIGITAL DISPLAY

code 59RE150

2 DIGITAL LINEAR SCALE

code 59VCM051

3 DIGITAL DISPLAY

DYBO 4.0

SPECIAL SPRINGS

IT Cos'è DYBO 4.0?

Unità per controllo dei parametri operativi di cilindri ad azoto collegati su stampi lamiera.

EN What's DYBO 4.0?

Equipment for checking the operating parameters of nitrogen cylinders systems installed in stamping dies.

DE Was ist DYBO 4.0?

Gerät zur Überwachung der Funktionsparameter von in Werkzeuge eingebauten Gasdruckfeder-Systemen.

FR Qu'est-ce que c'est DYBO 4.0?

Equipement de contrôle des paramètres de fonctionnement des systèmes de ressort à gaz installés dans les moules d'emboutissage.

ES ¿ Qué es DYBO 4.0?

Equipo para verificar los parámetros de funcionamiento de los sistemas de cilindros de nitrógeno instalados en troqueles de estampado.

PT O que é DYBO 4.0?

Equipamento para verificação de pressão dos sistemas de cilindros instalados nas ferramentas.

new

IT Vantaggi DYBO 4.0

- Adatto per controllo produzione Industria 4.0
- Riduzione dei costi di stampaggio, scarti e tempi improduttivi
- Registrazione della pressione del sistema
- Gestione simultanea della pressione su circuiti indipendenti
- Collegabile a tutti i pannelli di controllo sul mercato
- Adatta per tutti i sistemi collegati esistenti senza retrofit

EN DYBO 4.0 benefits

- Suitable for production control systems for Industry 4.0
- Reduction of stamping costs, scraps and downtimes of production
- Recording of the pressure value of the system
- Simultaneous management of pressure on independent lines
- Linkable to all control panels on the market
- Suitable for all existing systems without retrofit

DE Vorteile von DYBO 4.0

- Geeignet für Produktionsüberwachungs systeme für Industrie 4.0
- Reduzierung von Stanzkosten, Ausschuss und Produktionsausfallzeiten
- Aufzeichnung des Drucks des Systems
- Simultanes Druckmanagement auf unabhängigen Kreisläufen
- Kann an alle auf dem Markt verfügbaren Kontrollarmaturen angeschlossen werden
- Geeignet für alle bestehenden Systeme ohne Nachrüstung

FR Avantages DYBO 4.0

- Adapté aux systèmes de contrôle de production pour l'Industrie 4.0
- Réduction des coûts d'emboutissage, des déchets et des temps d'arrêt de la production
- Enregistrement de la valeur de pression du système
- Gestion simultanée de la pression sur des lignes indépendantes
- Connectable à tous les panneaux de contrôle sur le marché
- Adapté à tous les systèmes existants sans rétrofit

ES Ventajas DYBO 4.0

- Adecuado para sistemas de control de producción para la Industria 4.0
- Reducción de los costos de estampado, desechos y tiempos muertos de producción
- Registro del valor de presión del sistema
- Gestión simultánea de la presión en líneas independientes
- Conectable a todos los paneles de control en el mercado
- Apto para todos los sistemas existentes sin modificación

PT Vantagens DYBO 4.0

- Compativel com os sistemas de controle da Industria 4.0
- Redução dos custos de produção, refugos e paradas de produção
- Memorização dos valores de pressão da ferramenta
- Gestão simultanea de pressão sobre linhas independents
- Compativel com todos os paineis de controle
- Compativel com todos os sistemas de cilindros sem necessidade de adaptação

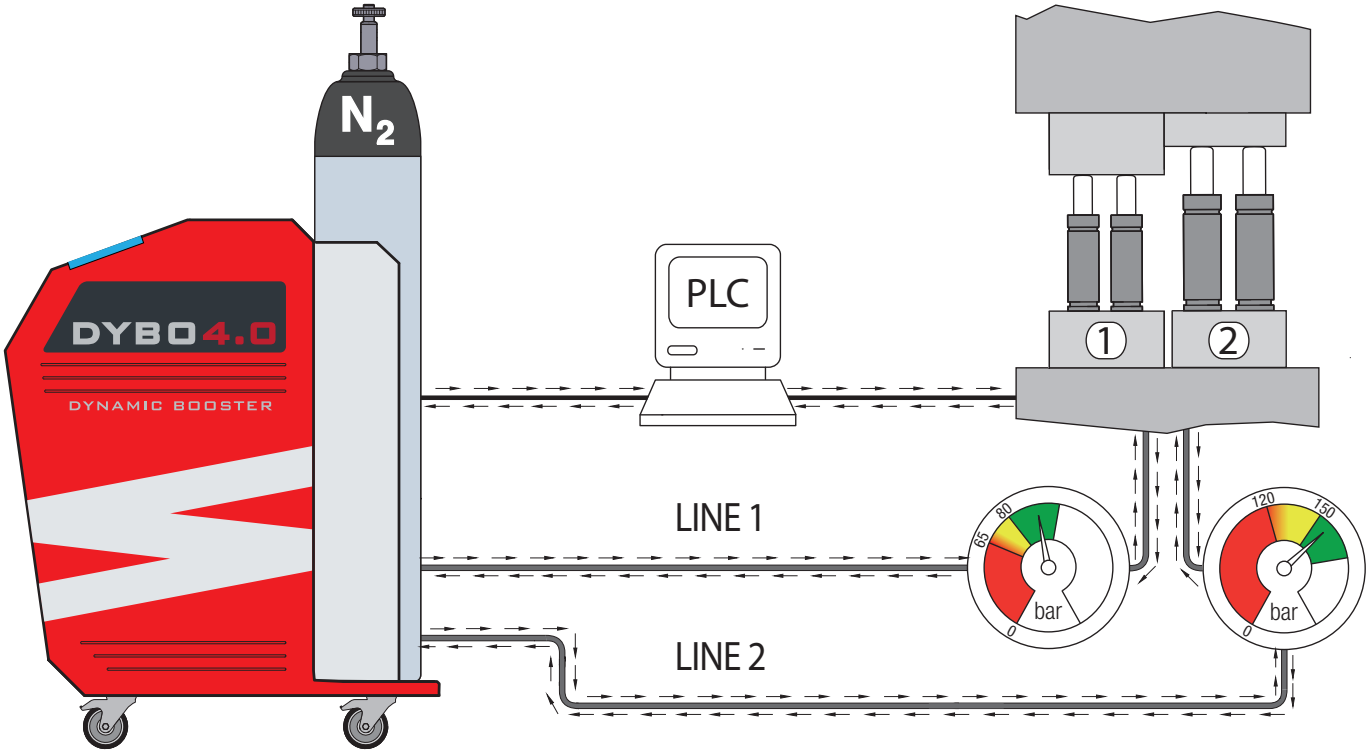

IT Che cosa fa DYBO 4.0?

- Monitoraggio della pressione dell'azoto nel sistema ad ogni ciclo
- Trasmissione di un segnale che permette di fermare automaticamente la pressa se la pressione scende al di sotto di un valore di soglia regolabile
- Recupero automatico della pressione del sistema durante il fermo pressa
- Trasmissione dei dati operativi via cavo o Wi-Fi al server o al Cloud con protocollo MQTT

EN What DYBO 4.0 does?

- Detection of the nitrogen system pressure at each cycle
- Transmission of a signal which allows to stop automatically the press when the pressure falls below an adjustable threshold value
- Automatic recovery of the pressure in the system during the press stop
- Transmission of working data via cable or WI-FI to server or Cloud with MQTT protocol

DE Was macht DYBO 4.0?

- Messung des Stickstoffgasdrucks bei jedem Zyklus
- Senden eines Signals, das es ermöglicht, die Presse automatisch zu stoppen, wenn der Druck unter einen einstellbaren Grenzwert fällt
- Automatische Wiederherstellung des Drucks im System bei Pressenstillstand
- Senden der Arbeitsdaten über Kabel oder Wi-Fi an Server oder Cloud mit MQTT Protokoll

FR Que fait-DYBO 4.0?

- Détection de la pression du système d'azote à chaque cycle
- Transmission d'un signal permettant d'arrêter automatiquement la presse lorsque la pression tombe en dessous d'une valeur seuil réglable
- Récupération automatique de la pression dans le système lors de l'arrêt de la presse
- Transmission des données de travail par câble ou WI-FI au serveur ou au cloud avec protocole MQTT

ES ¿Qué hace DYBO 4.0?

- Detección de la presión del sistema de nitrógeno en cada ciclo
- Transmisión de una señal que permite que la prensa se detenga automáticamente cuando la presión cae por debajo de un valor umbral ajustable
- Recuperación automática de la presión en el sistema durante la parada de la prensa
- Transmisión de datos de trabajo por cable o WI-FI al servidor o a la nube con protocolo MQTT

PT O que DYBO 4.0 faz?

- Detecta a pressão do Sistema a cada ciclo
- Transmite um sinal que permite que a prensa seja desligada automaticamente quando a pressão cai abaixo do valor determinado
- Recarregamento automatico da pressão quando a prensa esta parade
- Transmissão automatica dos dados via cabo ou Wi-Fi para o servidor ou para nuvem utilizando o protocol MQTT

	DYBO Pmax	N2 Pmin DYBO	AIR	°F °C	H L P L x P x H	Kg
230/400/415/440/ 480/575 V - 50 Hz / 60Hz	210 bar *3045 psi*	30 bar *435 psi*	6 bar *87 psi*	0 - 45 °C *32 - 113 °F*	550 x 990 x 1200 mm *21.65 x 38.98x 47.24 inch*	165 Kg *363.76 lbs*

EYE PRESSURE SENSOR

SPECIAL SPRINGS

IT Cos'è EYE?

Sistema digitale per il rapido controllo della pressione di cilindri ad azoto autonomi. Valore di soglia della pressione regolabile con 3 diverse unità di misura (bar, psi, MPa). Alimentato a batteria.

EN What's EYE?

Digital system for quick control of the pressure of self-contained gas cylinders. Settable pressure threshold value with 3 different measurement units (bar, psi, MPa). Battery-powered.

DE Was ist EYE?

Digitales System zur schnellen Überprüfung des Drucks von autonomen Gasdruckfedern. Grenzwert in drei verschiedenen Maßeinheiten (bar, psi, MPa) einstellbar. Batteriebetrieben.

FR Qu'est-ce que c'est EYE?

Système numérique pour le contrôle rapide de la pression de ressorts à gaz autonomes. Valeur de seuil de la pression réglable avec 3 unités de mesure différentes (bar, psi, MPa). Alimenté par piles.

ES ¿ Qué es EYE?

Sistema digital para el control rápido de la presión de los cilindros de gas autónomos. Valor umbral de la presión configurable con 3 unidades de medida diferentes (bar, psi, MPa). Alimentado por batería.

PT O que é EYE?

Sistema digital para um controle rapido de pressão para cilindros autonomos, podendo ser configurado com 3 diferentes valores-limiar de pressão (bar, psi, MPa). Alimentação com bacteria.

new

IT Vantaggi EYE

- Visualizzazione e lettura rapida
- Riduzione dei costi di manutenzione degli stampi
- Interfaccia semplice
- Piccole dimensioni
- Alimentazione elettrica con batterie a lunga durata

EN EYE benefits

- Quick visualization and reading
- Reduction of maintenance costs of dies
- Simple interface
- Small size
- Power supply with long-lasting battery

DE Vorteile von EYE

- Schnelle Anzeige und Ablesbarkeit
- Reduzierung der Wartungskosten der Werkzeuge
- Einfache Schnittstelle
- Platzsparend
- Stromversorgung über langlebige Batterie

FR Avantages EYE

- Visualisation et lecture rapide
- Réduction des coûts de maintenance des moules
- Interface simple
- Dimensions compactes
- Alimentation électrique avec batterie longue durée

ES Ventajas EYE

- Visualización y lectura rápida
- Reducción de los costes de mantenimiento de los troqueles
- Interfaz simple
- Tamaño pequeño
- Fuente de alimentación con batería de larga duración

PT Vantagens EYE

- Rapida leitura e vizualização da pressão
- Redução dos custos de Manutenção do ferramental
- Interface simples
- Dimensões reduzidas
- Fonte de alimentação com bacteria de longa duração

Battery lifetime	Measuring range:	Accuracy	Alarms	°F °C	N_2
> 2000 readings	0 ÷ 600 bar *0 ÷ 8700 psi* 0 ÷ 60 MPa	±1,0% f.s., ±1 digit whichever is greater	Low pressure (adjustable), High pressure (fixed), Sensor malfunction, Low battery	0 - 80 °C *32 - 176 °F*	IP65

CONTROL DELAY SYSTEM

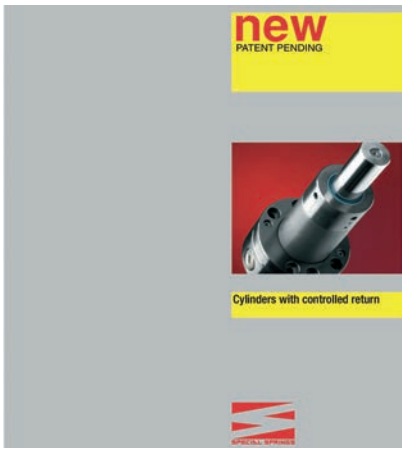

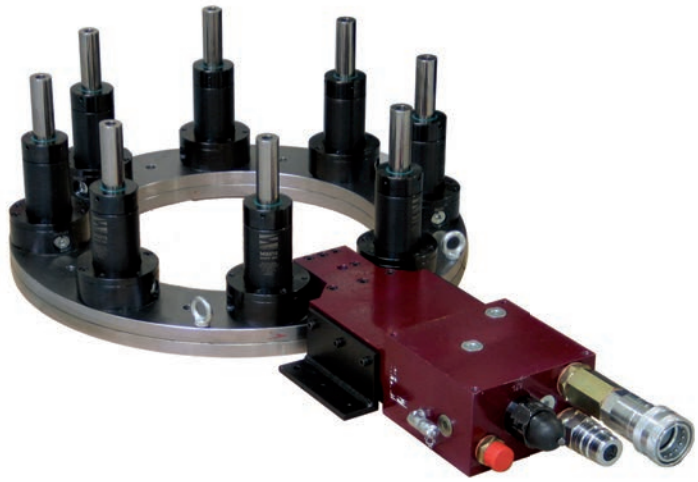

IT VANTAGGI DEL SISTEMA SPECIAL SPRINGS

- Ritorno degli steli dei cilindri indipendente dal ciclo pressa.
- Velocità di ritorno degli steli dei cilindri indipendente dalla velocità della pressa.
- Velocità di ritorno degli steli dei cilindri costante e regolabile.
- Forza di contrasto dei cilindri costante, crescente o decrescente da inizio a fine ciclo di lavoro.
- Utilizzo parziale della corsa dei cilindri possibile senza apportare modifiche al sistema.
- Continuo smaltimento del calore con scambiatori di calore sull'unità di comando.
- Massima affidabilità del sistema garantita dal fluido idraulico continuamente rigenerato.

FR LES AVANTAGES DE SPECIAL SPRINGS SYSTÈME

- Course de retour des pistons indépendante du cycle de la presse.
- Vitesse de remontée des pistons indépendante de la vitesse de la presse.
- Vitesse de remontée des pistons constante et réglable.
- Force d'opposition du vérin : constante, croissante ou décroissante du début à la fin du cycle de travail.
- Utilisation partielle de la course possible sans modification du système.
- Dispersion continue de la chaleur avec un échangeur thermique sur l'unité de commande.
- Fiabilité maximale du système garantie par le renouvellement permanent du fluide hydraulique.

EN ADVANTAGES OF THE SPECIAL SPRINGS SYSTEM

- Return stroke of the cylinder rods independent from press cycle.
- Return speed of cylinder rods independent from press speed.
- Return speed of cylinder rods constant and adjustable.
- Cylinder contrasting force: constant, increasing or decreasing from beginning to end of working cycle.
- Partial use of cylinder stroke possible without system modifications.
- Continuous dispersal of the heat by heat exchanger on the command unit.
- Maximum system reliability guaranteed by the constant renewal of the hydraulic fluid.

ES VENTAJAS DEL SISTEMA SPECIAL SPRINGS

- Retorno del cilindro independiente del ciclo de la prensa.
- Velocidad de retorno del vástago independiente del cliclo de la prensa.
- Velocidad de retorno del vástago constante a regulable.
- Fuerza de contraste del cilindro: constante, aumentable o disminuible de principio a fin del ciclo de trabajo.
- Posibilidad de utilizar incluso parcialmente la carrera sin necesidad de modificar el sistema.
- Contínua dispersión del calor con un intercambiador de calor en la unidadde control.
- Fiabilidad máxima del troquel garantizada por la constante renovación del fluido en el sistema

DE DIE VORTEILE DES SYSTEMS VON SPECIAL SPRINGS

- Rücklauf der Kolbenstangen unabhängig vom Pressenzklus.
- Rücklaufgeschwindigkeit der Kolbenstangen unabhängig von der Pressengeschwindigkeit.
- Rücklaufgeschwindigkeit der Kolbenstangen konstant und einstellbar.
- Gegenkraft der Zylinder konstant, zunehmend oder abnehmend von Anfang bis Ende des Ardeitszyklus.
- Teilnutzung vom hub der Zylinder möglich, ohne dass dazu Systemänderungen erforderlich sind.
- Kontinuierliche Ableitung der Wärme, durch einen Wärmeaustauscher im Hydraulikaggregat.
- Maximale Zuverlässigkeit des Systems, garantiert durch eine kontinuierliche Filtrierung und Temperierung des Hydrauliköls.

PT VANTAGENS DO SISTEMA SPECIAL SPRINGS

- Curso de retorno do cilindro independente do ciclo da prensa.
- Velocidade de retorno do êmbolo independente do ciclo da prensa.
- Velocidade de retorno do êmbolo constante ou regulável.
- Força do cilindro: constante ou variável (maior ou menor força) do início ao fim do ciclo de trabalho.
- Possibilidade de se usar também parcialmente o curso sem ter necessidade de modificar o sistema.
- Contínua dissipação do calor com um permutador de calor na unidade de comando.
- Máxima fiabilidade da ferramenta garantida pela renovação constante do fluído no sistema.

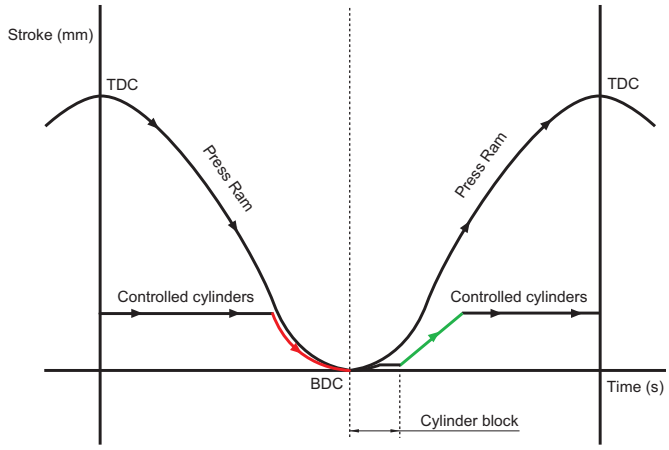

Standard version with 2 lines. Customized version available with more lines.

IT Richiedere o scaricare dal sito www.specialsprings.com il catalogo.

EN Ask for or download the catalogue from our web site www.specialsprings.com.

DE Der Katalog von unsere Internetseite www.specialsprings.com hereunterladen oder anfordern.

FR Demandez ou téléchargez notre catalogue à partir de notre site web www.specialsprings.com.

ES Solicitar o descargar de la web www.specialsprings.com el catálogo.

PT Requerer ou descarregar no site www.specialsprings.com o catálogo.

NITRO STRIP

IT Carichi forti - estrattore a gas con forza di estrazione regolabile. Montaggio diretto su portapunzoni standard per punzoni ball-lock o con testa ISO 8020.

EN Heavy duty - Nitrogen gas stripper with adjustable force. Direct mounting on standard retainers for Ball-Lock or ISO 8020 punches.

DE Schwere Belastung - Gasdruck-Abstreifer mit einstellbarer Kraft. Direktmontage auf Standard-Stempelhalteplatten für Stempel mit Ball-Lock-System oder nach ISO 8020.

FR Charge lourde - Unité de dévêtissage à gaz avec force réglable. Montage direct sur les plaques porte-poinçon standard pour poinçons avec système Ball-Lock ou selon ISO 8020.

ES Carga pesada - Extractor de punzones de nitrógeno con fuerza ajustable. Montaje directo en porta punzones estándares para punzones Ball-Lock o según ISO 8020.

PT Carga pesada - Perfuradores de nitrogênio com força ajustável. Montagem directa em porta punções padrão para punções Ball-Lock ou segundo ISO 8020.

new

OPAS
(Over Pressure Active Safety)

IT Caratteristiche

- Montaggio diretto su portapunzoni standard
- Testina estrattore e premilamiera lunga o corta in bronzo guidata, rimovibile e sagomabile
- Testina anti-rotazione con 8 mm di corsa
- 4 codici colore standard indicativi del carico/forza
- 8 modelli per punzoni da 10 a 40 mm di diametro
- Forza a contatto fino a 1880 daN / 4200 lbf
- Forza di estrazione fino a 3200 daN / 7200 lbf
- Forze di estrazione regolabili
- Collegabile con altre unità NITRO STRIP per massima flessibilità
- Sicurezza OPAS inclusa come standard
- Dimensioni compatte

EN Features

- Direct mounting on standard retainers
- Bronze stripping head that is guided, demountable and machinable. Available short or long
- Anti-rotation head with 8 mm stroke
- 4 standard color codes for different forces/loads
- 8 models with punch diameter from 10 to 40 mm
- Contact force as high as 1880 daN / 4200 lbf
- Stripping force as high as 3200 daN / 7200 lbf
- Adjustable stripping force
- Connectable with other NITRO STRIP units for maximum flexibility
- OPAS built-in as standard
- Compact design

DE Merkmale

- Direktmontage auf Standard-Stempelhalteplatten
- Abstreiferkopf aus Bronze, geführten, abnehm- und bearbeitbar. Verfügbar kurz oder lang
- Abstreiferkopf verdrehgesichert, mit einem Hub von 8 mm
- 4 Standard-Farbcodes für verschiedene Kräfte/ Belastungen
- 8 Modelle mit Stempeldurchmesser von 10 bis 40 mm
- Kontaktkraft bis zu 1880 daN / 4200 lbf
- Abstreiferkraft bis zu 3200 daN / 7200 lbf
- Abstreiferkraft einstellbar
- Anschließbar mit anderen NITRO STRIP Einheiten für maximale Flexibilität
- OPAS standardmäßig eingebaut
- Kompaktes Design

FR Caractéristiques

- Montage direct sur les plaques porte-poinçon standard
- Tête de dévêtisseur de bronze, guidée, démontable et qui peut être usinée. Disponible courte ou longue
- Tête de dévêtisseur résistant à la torsion, avec une course de 8 mm
- 4 codes couleur standard avec différentes forces/charges
- 8 modèles avec diamètres de poinçon de 10 à 40 mm
- Force de contact jusqu'à 1880 daN / 4200 lbf
- Force de dévêtisseur jusqu'à 3200 daN / 7200 lbf
- Force de dévêtisseur ajustable
- Possibilité de relier avec autres unités NITRO STRIP pour une flexibilité maximale
- OPAS installée de série - Design compact

ES Características

- Montaje directo en porta punzones estándares
- Cabeza del extractor de bronce, guiada, desmontable y mecanizable. Disponible corta o larga
- Cabeza anti-rotación con carrera de 8 mm
- 4 códigos de colores estándares para fuerzas/ cargas diferentes
- 8 modelos con diámetro del punzón de 10 a 40 mm
- Fuerza de contacto hasta 1880 daN / 4200 lbf
- Fuerza de extracción hasta 3200 daN / 7200 lbf
- Fuerza de extracción ajustable
- Conectable a otras unidades NITRO STRIP para una máxima flexibilidad
- OPAS incluida como estándar
- Diseño compacto

PT Características

- Montagem directa em porta punções padrão
- Cabeça do destacador em bronze, guiada, removível e de fácil usinagem. Disponível curta ou longa
- Cabeça anti-rotação com curso de 8 mm
- 4 códigos de cores padrão para diferentes forças/cargas
- 8 modelos com diâmetro da punção de 10 a 40 mm
- Força de contato até 1880 daN / 4200 lbf
- Força de extração até 3200 daN / 7200 lbf
- Força de extração pode ser ajustada
- Possibilidade de interligação com outras unidades NITRO STRIP para o máximo de flexibilidade
- OPAS como padrão
- Design compacto

Initial force up to 2000 daN
Stripping force up to 4000 daN

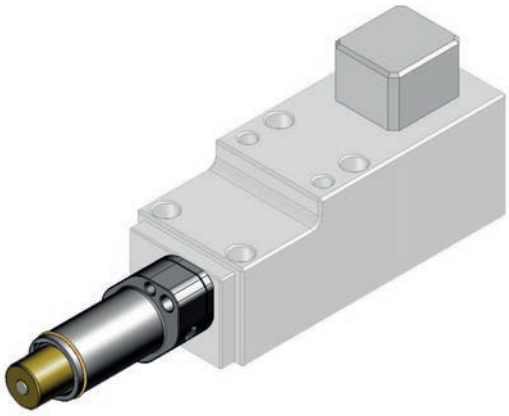

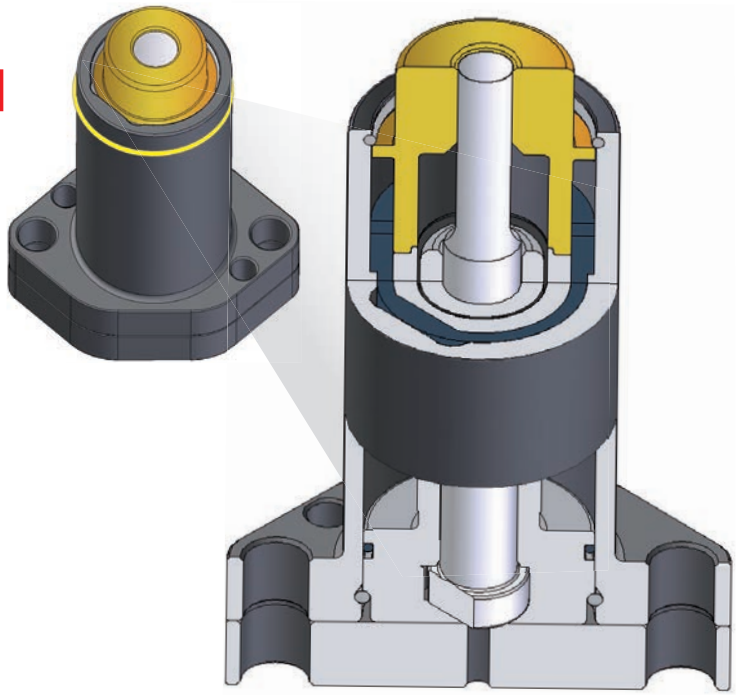

IT Richiedere o scaricare dal sito www.specialsprings.com il catalogo.

EN Ask for or download the catalogue from our web site www.specialsprings.com.

DE Den Katalog anfordern oder von unserer Internetseite www.specialsprings.com herunterladen.

FR Demandez ou téléchargez notre catalogue à partir de notre site web www.specialsprings.com.

ES Solicitar o descargar de la web www.specialsprings.com el catálogo.

PT Requerer ou descarregar no site www.specialsprings.com ùo catálogo.

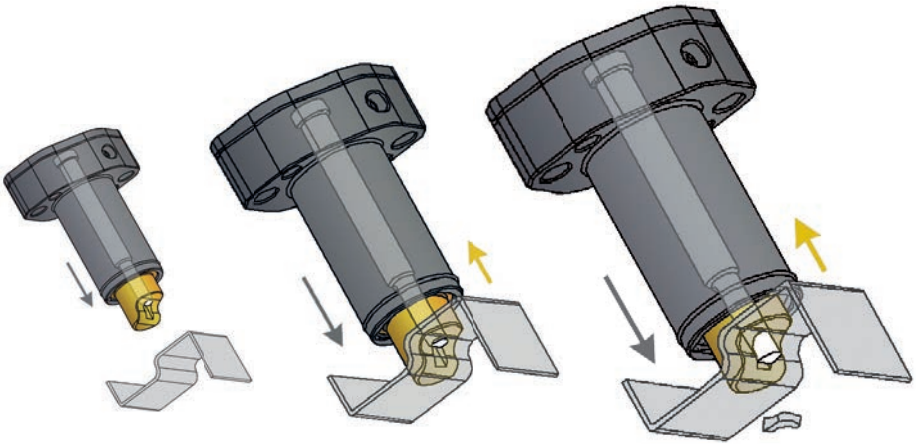

IT
- Testa premilamiera estraibile e sagomabile
- Facile posizionamento e fissaggio
- Elevata forza di estrazione
- Dimensioni compatte
- Adatto per punzoni ISO 8020
- Non è richiesto l' uso di altro portapunzone
- Ideale per uso combinato con unità cam

EN
- Stripper head removable and mouldable
- Easy positioning
- High and adjustable holding and stripping force
- Compact dimensions
- Suitable for ISO 8020 shoulder style punch
- Doesn't require the use of standard retainer
- Ideal for combined use with cam unit

DE
- Niederhalterkopf herausnehmbar und mit bearbeitbarer Kontur
- Einfache Positionierung
- Hohe und einstellbare Niederhalter- und Abstreiferkraft
- Kompakte Größe
- Geeignet für Schneidstempel ISO 8020
- Andere Stempelhalteplatten sind nicht erforderlich
- Ideal für den Einsatz in Kombination mit Schiebern

FR
- Tête de bronze que peut être modelée et extraite
- Positionnement facile
- Force elevée de extraction
- Dimensions compactes
- Indiqué pour poincons ISO 8020
- Il ne demande pas l'emploi de autre poincon
- Idéal à utiliser avec l' unitée CAM

ES
- Cabeza de despegador desmontable y moldeable
- Facil posicionamiento
- Fuerza de extraccion superior y ajustable
- Dimensiones compactas
- Apropiado para punzon con cabeza ISO 8020
- No requiere uso de porta punzon estandar
- Ideal para utilizar con carro

PT
- Cabeça de corte fácil remoção e maquinavel
- Fácil posicionamento
- Fixação alta e ajustável e força de corte
- Dimensões compactas
- Adequado para punção o ISO 8020 respigado
- Não necessita do uso de um retentor normalizado
- Ideal para uso combinado com uma unidade CAM